BPCL/MOEF/EC/2023/02 Dt: 01/12/2023

To,
**Chief Conservator of Forests,**
Ministry of Environment, Forests & Climate Change,
Regional Office, Western Region,
Kendriya Paryavaran Bhavan,
Link Road No. 3, E – 5, Ravi Shankar Nagar,
**BHOPAL – 462 016 (MP)**

**SUB : Six Monthly Compliance Report of Bharat Oman Refineries Limited, Bina – 7.8 MMTPA Refinery, including Captive Power Plant and Dispatch Terminal.**

Ref : Environment Clearance granted by MoEF vide letter No. J-11011/21/94-IA-II (I), Dtd: 16/02/1995, J-11011/21/1994-1AII(I), Dtd: 20/03/2009, J-11011/135/2013-IA II (I), Dtd: 28/11/2014 and J-11011/135/2013-IA II (I), Dtd: 12/05/2015

Dear Sir,

With reference to above subject, we hereby submit our six monthly compliance report for period of June 2023 - Nov 2023 on Environment Clearance granted for 7.8 MMTPA Refinery, including Captive Power Plant and Dispatch Terminal.

Thanking You,

Yours Faithfully,
For Bharat Petroleum Corporation Limited,

medhe anil t
Digitally signed by medhe anil t
Date: 2023.12.04 09:21:41 +05'30'

**(Anil T Medhe)**
DGM-Environment, PSM & Business Excellence

Encl: As above

**Copy to:**

1. The Member Secretary, Central Pollution Control Board, Parivesh Bhawan, East Arjun Nagar, Delhi- 110032
2. Regional Office, M.P. Pollution Control Board, Sagar

**SIX MONTHLY COMPLIANCE REPORT**

**OF**

**ENVIRONMENT CLEARANCE ISSUED BY MOEF & CC, NEW DELHI**

VIDE LETTER NO.: **J-11011/135/2013-IA II (I), Dtd: 12th May, 2015**

**FOR**

**EXPANSION OF REFINERY CAPACITY FROM 7.5 MMTPA TO 7.8 MMTPA OF M/S. BHARAT OMAN REFINERIES LIMITED(BORL) AT BINA, MP CONSIDERING AN INCREASE IN ANNUAL OPERATING DAYS FROM 333 DAYS TO 345 DAYS AND MAINTAINING THE SAME DAILY PROCESSING RATE- AMENDMENT**

| S. No | EC Conditions | Compliance Status |
|---|---|---|
| 2. | The Proposal was considered by the Reconstituted Expert Appraisal Committee (Industry) in its 32nd meeting held during 20th -21st January, 2015. EIA report preparation/public hearing is exempted as per para 7(ii) of EIA Notification, 2006. The committee recommended the proposal for amendment in environmental clearance. | Noted. |
| 3. | The ministry accepts the recommendation of the expert appraisal committee (industry) for amendment in the existing clearance subject to compliance of specific conditions and general conditions. | Noted. |
| 4. | All other conditions will remain unchanged | We have noted the condition. |
| 5. | You are requested to keep this letter with the Environmental Clearance accorded vide letter No. J-11011/135/2013-IA II (I) dated 28th November, 2014. | We have noted the condition. |
| 6. | In future, in case of change in the scope of the project, the company shall obtain fresh environmental clearance | We have noted the condition. |
| 7. | This issues with the prior approval of the competent authority | Noted. |

**SIX MONTHLY COMPLIANCE REPORT**

**OF**

**ENVIRONMENT CLEARANCE ISSUED BY MOEF & CC, NEW DELHI**

**VIDE LETTER NO.: J-11011/135/2013-IA II (I), Dtd: 28th November, 2014**

**FOR**

**EXPANSION OF REFINERY (FROM 6 MMTPA TO 7.5 MMTPA CRUDE PROCESSING) BY DEBOTTLENECKING OF M/S. BHARAT OMAN REFINERIES LIMITED(BORL) AT VILLAGE AGASOD, TEHSIL BINA, DISTRICT SAGAR, MADHYA PRADESH.**

<table>
<tr><th>S. No.</th><th>EC Conditions</th><th>Compliance Status</th></tr>
<tr><td>A</td><td>Specific Conditions</td><td></td></tr>
<tr><td>i.</td><td>Compliance to all the environmental conditions stipulated in the environmental clearance letter no. J-11011/121/1994-IA II (I) dated 16th February, 1995 and 20th march, 2009 shall be satisfactorily reports submitted to the Ministry of Regional office at Bhopal.</td><td>Complying with.<br>Six monthly monitoring reports are regularly submitted to the RO-MoEF&CC, Bhopal and other authorities along with Six Monthly Compliance Report of Environment Clearance.<br>Last 3 compliance report submission details are given below:
<table>
<tr><th>Period of Compliance</th><th>Date of submission</th></tr>
<tr><td>Dec,22 to May, 23</td><td>01.06.2023</td></tr>
<tr><td>May, 22 to Nov,22</td><td>01.12.2022</td></tr>
<tr><td>Dec,21 to April,22</td><td>10.08.2022</td></tr>
</table></td></tr>
<tr><td>ii</td><td>M/s BORL shall comply with new standards/norms for Oil Refinery Industry notified under the Environment (Protection) Rules, 1986 vide G.S.R 186 (E) dated 18th March, 2008</td><td>New norms prescribed for the refineries were incorporated into the design of the project and are being complied with.<br>Gaseous emissions from all the process units are continuously monitored through Online Continuous Emission Monitoring System available in all the stacks for ensuring compliance with the stipulations. In addition, the monthly Stack monitoring/analysis is being done through M/s. Kadam Environmental Consultants, Vadodara (a MoEF&CC and NABL accredited laboratory) monitoring reports from June, 2023 to Oct, 2023 are enclosed as Annexure-6</td></tr>
<tr><td>iii</td><td>Continuous on-line stack monitoring for $SO_2$, NOx, HC and CO of all the stacks shall be carried out. Low NOx burners shall be installed in heaters/furnaces/boiler to minimize NOx emissions.</td><td>Continuous on-line stack monitoring for SO2, NOx, PM and CO is being carried out as per the guidelines of CPCB.<br>Low NOx burners installed in all new heater / furnaces to minimize the NOx emissions.</td></tr>
<tr><td>iv</td><td>The process emissions [$SO_2$, NOx, HC (methane & Non-methane)], VOC and Benzene from various units shall conform to the standards prescribed under the Environment (protection) Act. At no time, the emission levels shall go beyond the stipulated standards. In the event of failure of pollution control system(s) adopted by the unit, the unit shall be immediately put out of operation and shall not be restarted unit the desired efficiency of the pollution of the pollution control device has been achieved.</td><td>Gaseous emissions from all the process units are continuously monitored through online stack monitoring system.<br><br>In addition, the monthly Stack monitoring/analysis is being done through a MoEF&CC approved laboratory.</td></tr>
<tr><td>v</td><td>Leaks detection and repair programme shall be prepared and implemented to control HC/VOC emissions. Focus shall be given to prevent fugitive emissions for which preventive maintenance of pumps, valves, pipelines are required. Proper maintenance of mechanical seals of pumps and valves shall be given. A preventive maintenance schedule for each unit shall be prepared and adhered to. Fugitive</td><td>Complied with.<br>Leak Detection and Repair (LDAR) program is implemented since 2011 for monitoring of fugitive emissions in refinery & dispatch terminal and the reports are submitted along with Six monthly monitoring reports to the RO - MoEF&CC, Bhopal and other authorities along with Six Monthly</td></tr>
</table>

<table>
<tr><th>S. No.</th><th>EC Conditions</th><th>Compliance Status</th></tr>
<tr><td></td><td>emission of HC from product storage tank yards etc. must be regularly monitored sensors for detecting HC leakage shall be provide at strategic location.</td><td>Compliance Report of Environment Clearance. The summary of the savings done after the repair of identified leaks from June, 2023 to Nov, 2023 is given below:
<table>
<tr><th>S. No.</th><th>Total points checked</th><th>Equipment's checked</th></tr>
<tr><td>1</td><td>6086</td><td>Pump, compressors, valves, flanges, exchangers, PSV, PRV etc.</td></tr>
</table>
Total VOC savings after attending leaks: 0.367 kg/day.<br>HC detectors installed at strategic locations as per requirement.</td></tr>
<tr><td>vi</td><td>$SO_2$ emission after expansion from the plant shall not exceed 29.25 TPD. Sulphur recovery efficiency of sulphur recovery unit with tail gas treating shall not be less than 99.9%.</td><td>Sulphur recovery efficiency of Sulphur Recovery Unit and Tail gas treatment (TGT) sections is >99.9%.<br>The sulphur present in crude oil gets evolved mainly in the form of H2S gas during various stages of processing. Sulphur Recover Unit (SRU) recovers the Sulphur from Hydrogen Sulphide (H2S) rich gas stream which is formed in various secondary processing units. H2S rich gas is the feed to SRU & is treated in the Main Combustion Chamber & followed by two stage Clause reaction to convert H2S into elemental Sulphur. Residual Sulphur compounds are further treated in Tail Gas Treating Unit (TGTU) in presence of catalyst. Overall, very high Sulphur recovery is achieved in SRU with efficiency of >99.9%.</td></tr>
<tr><td>vii</td><td>As proposed, record of sulphur balance shall be maintained at the Refinery as part of the environmental data on regular basis. The basic component of sulphur balance include sulphur input through feed (sulphur content in crude oil), sulphur output from Refinery through products, by-product (elemental sulphur), atmospheric emissions etc.</td><td>Being complied.</td></tr>
<tr><td>viii</td><td>Ambient air quality monitoring stations, [$PM_{10}$, $PM_{2.5}$, NOx, $H_2S$, mercaptan, non-methane-HC and Benzene] shall be set up in the complex in consultation with Maharashtra Pollution Control Board, based on occurrence of maximum ground level concentration and down-wind direction of wind. The monitoring network must be decided based on modelling exercise to represent short term GLCs.</td><td>Complied with.<br>BORL (Currently BPCL-Bina Refinery) has installed and commissioned 4 nos. of continuous AAQMS in consultation with MPPCB. And connected to MPPCB. One station shifted to MPPCB- Sagar as per the directions of MPPCB.</td></tr>
</table>

<table>
<tr><th>S. No.</th><th>EC Conditions</th><th>Compliance Status</th></tr>
<tr><td>ix</td><td>Ambient air quality data shall be collected as per NAAQMS standard notified by the ministry on 16th November, 2009 and trend analysis w.r.t past monitoring results shall also be carried out. Adequate measures based on the trend analysis shall be taken to improve the ambient air quality in the project area.</td><td>Complied with.</td></tr>
<tr><td>x</td><td>The gaseous emissions from DG set shall be dispersed through adequate stack height as per CPCB standards. Acoustic enclosure shall be provided to the DG sets mitigate the noise pollution. Besides, acoustic enclosure /silencer shall be installed wherever noise levels exceed the limit.</td><td>Complied with.<br>Adequate stack height provided to the proposed DG sets as part of refinery expansion. Acoustic enclosures / silencers incorporated as part of the design of the DG sets.
<table>
<tr><th>Name of section</th><th>Capacity</th><th>Stack Height (meters)</th></tr>
<tr><td>D.G. Sets</td><td>125 KVA</td><td>6</td></tr>
<tr><td>D.G. Sets</td><td>62.5 KVA</td><td>12</td></tr>
<tr><td>D.G. Sets</td><td>62.5 KVA</td><td>12</td></tr>
<tr><td>D.G. Sets (Stand By)</td><td>625 KVA</td><td>13</td></tr>
<tr><td>D.G. Sets</td><td>2000 KVA</td><td>30</td></tr>
<tr><td>D.G. Sets</td><td>3000 KVA</td><td>30</td></tr>
<tr><td>D.G. Sets (Stand By)</td><td>1250 KVA</td><td>30</td></tr>
<tr><td>D.G. Sets (Stand By)</td><td>5000 KVA</td><td>30</td></tr>
</table></td></tr>
<tr><td>xi</td><td>Total raw water requirement from Betwa river shall not exceed 6.26 MGD. Industrial effluent shall be treated in the effluent treatment plant. Treated effluent shall be recycled/reused as make up for the raw water to cooling tower. Domestic sewage shall be treated in sewage treatment plant (STP). As proposed, no effluent shall be discharged outside the plant premises and zero discharge concepts shall be followed.</td><td>Complied with.<br>The total raw water requirement does not exceed the 6.26 MGD against the approved qty. of 10 MGD.<br>The effluent generated from the proposed expansion is treated within the existing Effluent Treatment Plant.<br>Domestic sewage generated is treated along with the process effluent in Sequential Batch reactor.<br>The entire treated water is reused for production of DM water in RO_DM plant and for horticulture purpose.<br>Hence, Zero Discharge Condition followed.</td></tr>
</table>

<table>
<tr><th>S. No.</th><th>EC Conditions</th><th>Compliance Status</th></tr>
<tr><td>xii</td><td>Oil catchers/oil traps shall be provided at all possible locations in rain/ storm water drainage system inside the factory premises.</td><td>Complied with.<br>Three numbers of oil catchers are already in place on storm water drainage system inside the factory premises.
<table>
<tr><th>S. No.</th><th>Oil Catcher</th><th>Location</th></tr>
<tr><td>1</td><td>Oil Catcher-1</td><td>ETP, to handle the storm water flowing from the process plants</td></tr>
<tr><td>2</td><td>Oil Catcher-2</td><td>ETP, to cater the storm water from Crude Receipt Terminal</td></tr>
<tr><td>3</td><td>Oil Catcher-3</td><td>Near Flare stack, to cater the storm water near flare stack</td></tr>
</table></td></tr>
<tr><td>xiii</td><td>As proposed, BORL shall be developed rain water harvesting pond in an area of 6 acres.</td><td>Complied with.<br>Rainwater harvesting measures have been implemented in refinery township.<br>Rainwater harvesting pond in 12 acres with 10 recharge wells having a capacity of 173156 m3 and recharge capacity of 25973 m3 is constructed in refinery premises.</td></tr>
<tr><td>xiv</td><td>As proposed, oily sludge shall be disposed-off through bio-remediation. Annual oily sludge generation and disposal data shall be submitted to Ministry's Regional Office and CPCB</td><td>Complied with.<br>Currently, the Oily sludge generated in the Effluent Treatment Plant is reprocessed in Delayed Coker Unit (DCU). Details of generation and reprocessing from June, 23 to Nov, 23 is given below:
<table>
<tr><th>S. No.</th><th>Month</th><th>Quantity, MT</th></tr>
<tr><td>1</td><td>June-23</td><td>15.9</td></tr>
<tr><td>2</td><td>July-23</td><td>2.28</td></tr>
<tr><td>3</td><td>Aug-23</td><td>14.2</td></tr>
<tr><td>4</td><td>Sept-23</td><td>23.9</td></tr>
<tr><td>5</td><td>Oct-23</td><td>26</td></tr>
<tr><td>6</td><td>Nov-23</td><td>18.2</td></tr>
</table>
There is also a provision in existing ETP to reprocess the Oily sludge in Bio Remediation Unit.<br>Annual oily sludge generation and disposal data is submitted in the form of Form-4 to board.</td></tr>
</table>

| S. No. | EC Conditions | Compliance Status |
|---|---|---|
| xv | The company should strictly comply with the rules and guidelines under Manufacture, storage and import of Hazardous chemicals rules, 1989 as amended in October, 1994 and January,2000 hazardous waste should be disposed of as per Hazardous waste (management, Handling and trans-boundary movement) rules, 2008 and amended time to time. | No hazardous chemical, which satisfies the criteria laid down in Part I of schedule 1 or listed in column 2 of Part II is being imported.<br><br>The hazardous waste generated is disposed as per the Hazardous and Other Wastes (Management and Transboundary Movement) Rules, 2016. Hazardous Waste authorisation is also obtained from MPPCB, valid till 31.12.2028. |
| xvi | The membership of common TSDF shall be obtained for the disposal of hazardous waste. Copy authorization or membership of TSDF shall be submitted to ministry's Regional office at Bhopal. Chemical/inorganic sludge shall be sent to treatment storage disposal facility (TSDF) for hazardous waste. Spent catalyst shall be sent authorized recyclers/re-processors. | Complied with.<br>BORL (Currently BPCL-Bina Refinery) has already taken TSDF membership with M/s. Pithampur Industrial Waste Management Private Limited, Dhar, MP.<br>The spent catalyst generated in the refinery is being sent to authorised recycler / re-processors only.<br>The details of spent catalyst handled in FY 22-23 is also submitted in Form-IV. |
| xvii | Proper oil spillage prevention management plan shall be prepared to avoid spillage/leakage of oil/petroleum product and ensure regular monitoring. | Complied with.<br>Emergency Response and Disaster Management Plan has been prepared.<br>Necessary features incorporated in expansion refinery to prevent and collect oil spills etc. |
| xviii | The company shall strictly follow all the recommendation mentioned in the charter on corporate responsibility for Environment protection. | Complied with.<br>The compliance status of CREP recommendations dated 01.06.2013 is attached as **Annexure-4** |
| xix | To prevent fire and explosion at oil and gas facility, potential ignition sources shall be kept to a minimum and adequate separation distance between potential ignition sources and flammable materials shall be as per the CPCB guidelines. | Complied with.<br>For refinery expansion, separation distance between various facilities in the refinery has been kept in accordance with applicable OISD standards (OISD-STD-118). |
| xx | Green belt shall be developed at least in 255 ha area in and around the plant premises to mitigate the effects of fugitive emissions all around the plant as per the CPCB guidelines in consultation with DFO. Thick greenbelt with suitable plant species shall be developed around unit. Selection of plant species shall be as per the CPCB guidelines. | Green belt development is a continuous activity in and around boundaries of refinery. Green belt of 200m width along the boundary of refinery is developed with local species like Neem, Sheesham, Kadamba, Arabic gum, scholar tree, Indian rosewood, red forest gum etc. A total of 4,01,696 saplings are planted so far in the refinery. |
| xxi | All the commitment made regarding issues raised during the public hearing/consultation meeting held on 19th February, 2014 shall be satisfactorily implemented. | Complied.<br>Public hearing was conducted on 19.02.2014. All the issues have been addressed adequately and to the satisfaction of the stakeholders. |

| S. No. | EC Conditions | Compliance Status |
|---|---|---|
| xxii | At least 5% of the total cost of the project shall be earmarked towards the enterprise social responsibility based on public hearing issues and item-wise details along with time bound action plan shall be prepared and submitted to the Ministry's Regional office at Bhopal. Implementation of such program shall be ensured accordingly in a time bound manner. | Being Complied.<br><br>Vide MoEFCC Memorandum – F. No. 22-65/2017-IA.III dated May 1, 2018, capital investment prescribed for a brown field project of greater than Rs 1,000 Crores to Rs. 10,000 crores are 0.25 % on Corporate Environmental Responsibility (CER).<br>It may be noted that we have applied for waiver of this condition with MoEF&CC and EAC committee recommended the same. Further, MoEFCC circular dated 30/09/2020 allocation of funds under CER is not required.<br>As on date we have spent more than 5.24 crores under ESR towards protection of Environment. Apart from above, company is doing CSR jobs in surrounding areas in four thematic areas which includes Environment also. |
| xxiii | All the recommendations mentioned in the rapid risk assessment report, disaster management plan and safety guidelines shall be implemented. | Being Complied.<br>Compliance status of Rapid Risk Assessment report is attached as **Annexure-3** |
| xxiv | Company shall adopt corporate Environment policy as per the ministry's O.M. no. J-11013/41/2006 –IA.II (I) dated 26th April, 2011 and implemented. | Company has well laid QEHS Policy.<br>A hierarchical system of the company to deal with environmental issues and for ensuring the compliance of Environmental clearance conditions is developed with environmental engineers in place. Periodical review of Environmental performance takes place at APEX meetings. |
| xxv | Provision shall be made for the housing of construction labour within the site with all necessary infrastructure and facilities such as fuel for cooking, mobile toilets, safe drinking water, medical health care, crèche etc. The Housing may be in the form of temporary structures to be removed after the completion of the project. | The construction labour required during the construction phase were hired from the nearby villages only, so there was no requirement for development of infrastructure facilities. The medical health care facilities were taken care by the VK BR hospital in the township premises. |
| **B** | **General Conditions** | |
| I | The project authorities must strictly adhere to the stipulations made by the State Pollution Control Board (SPCB), State Government and any other statutory authority. | Complying with all the stipulations made by the MP Pollution Control Board and compliance reports are submitted to MPPCB regularly. |
| ii | No further expansion or modification in the project shall be carried out without prior approval of the ministry of Environment & forests. In case of deviations or alterations in the project proposal from those submitted to this Ministry for clearance, a fresh reference shall be made to the Ministry to assess the adequacy | We have noted the condition. |

<table>
<tr><th>S. No.</th><th>EC Conditions</th><th>Compliance Status</th></tr>
<tr><td></td><td>of conditions imposed and to add additional environmental protection measures required, if any.</td><td></td></tr>
<tr><td>iii</td><td>The project authorities must strictly comply with the rules and regulation under Manufacture, storage and import of hazardous chemicals rules, 2000 as amended subsequently. Prior approvals form chief inspectorate of factories, Chief controller of Explosives, Fire safety inspectorate etc. must be obtained, wherever applicable.</td><td>Rules and regulations under MSIHC rules 1989, as amended in 2000 are compiled and approvals from The Petroleum and Explosives Safety Organization (PESO) and Fire safety inspectorate have been obtained for the project.</td></tr>
<tr><td>iv</td><td>The overall noise levels in and around the plant area shall be kept well within the standards by providing noise.</td><td>Adequate measures are incorporated during the detailed engineering of the project such that noise levels in and around the plant shall be within the noise levels. Summary of the noise survey reports is as below:
<table>
<tr><th>Month</th><th>Parameter</th><th>Tower No.1</th><th>Tower No.3</th><th>Tower No.5</th><th>Tower No.7</th></tr>
<tr><td rowspan="3">Sept-23</td><td>Leq Day</td><td>60.3</td><td>53.3</td><td>54.7</td><td>59.6</td></tr>
<tr><td>Leq Night</td><td>57</td><td>51.1</td><td>52.4</td><td>57.5</td></tr>
<tr><td>Leq (day/night)</td><td>59.4</td><td>52.7</td><td>54.1</td><td>59</td></tr>
<tr><td rowspan="4">June-23</td><td>Parameter</td><td>Tower No.2</td><td>Tower No.4</td><td>Tower No.6</td><td>Tower No.8</td></tr>
<tr><td>Leq Day</td><td>56</td><td>60.9</td><td>54.7</td><td>59.5</td></tr>
<tr><td>Leq Night</td><td>53.2</td><td>54.6</td><td>52.5</td><td>53.8</td></tr>
<tr><td>Leq (day/night)</td><td>55.3</td><td>59.6</td><td>54.1</td><td>58.3</td></tr>
</table></td></tr>
<tr><td>v</td><td>A separate Environmental Management cell equipped with full-fledged laboratory facilities must be set up to carry out the environmental management and monitoring functions.</td><td>Complied with.<br>Environment Management Cell has been set up with qualified staff to ensure the effective implementation of environmental safeguards.<br>Environment Management Cell Organogram is attached as Annexure-10</td></tr>
<tr><td>vi</td><td>Adequate funds shall be earmarked towards capital cost and recurring cost/annum for environment pollution control measures and shall be used to implement the conditions stipulated by the Ministry of Environment and Forests as well as the State Government along with the implementation schedule for all the conditions stipulated herein. The funds so provided shall not be diverted for any other purposes.</td><td>Complied.<br>• Separate budget has been allocated to the Environment Department. Allocated budget for the FY: 2023-24 is INR 718 Lakhs.<br>• Environment budget is not being diverted to any other purpose.</td></tr>
</table>

<table>
<tr><th>S. No.</th><th>EC Conditions</th><th>Compliance Status</th></tr>
<tr><td>vii</td><td>The Regional office of this Ministry/Central Control Board/State Pollution Control Board will monitor the stipulated conditions. A six-monthly compliance report and the monitored data along with statistical interpretation shall be submitted to them regularly.</td><td>Complying with.<br>Six monthly monitoring reports are regularly submitted to the RO-MoEF&CC, Bhopal and other authorities along with Six Monthly Compliance Report of Environment Clearance.<br>Last 3 compliance report submission details are given below:
<table>
<tr><th>Period of Compliance</th><th>Date of submission</th></tr>
<tr><td>Dec,22 to May, 23</td><td>01.06.2023</td></tr>
<tr><td>May, 22 to Nov,22</td><td>01.12.2022</td></tr>
<tr><td>Dec,21 to April,22</td><td>10.08.2022</td></tr>
</table></td></tr>
<tr><td>viii</td><td>A copy of clearance letter shall be sent by the proponent to concerned panchayat, Zila Parishad/ Municipal Corporation, Urban Local Body and the Local NGO, if any, from whom suggestion/ representations, if any were received while processing the proposal. The clearance letter shall also be put on the web site of the company by the proponent</td><td>Copy of clearance letter sent to panchayat, zila parishad/municipal corporation, urban local body.</td></tr>
<tr><td>ix</td><td>The project proponent shall upload the status of compliance of the stipulated environment clearance conditions, including results of monitored data on their website and shall update the same periodically. It shall simultaneously be sent to the Regional office of the MOEF, the respective Zonal Office of CPCB and the SPCB. The criteria pollutant levels namely: [$PM_{10}$, $PM_{2.5}$, $SO_2$ NOx, HC methane & non-methane) VOCs (ambient levels as well as stack emissions) or critical sectoral parameters, indicated for the projects shall be monitored and displayed at a convenient location near the main gate of the company in the public domain.</td><td>Compliance report of conditions stipulated in Environment Clearance is available on the company website.<br>Six monthly monitoring reports are regularly submitted to the RO-MoEF&CC, Bhopal and other authorities along with Six Monthly Compliance Report of Environment Clearance.<br>The Continuous Ambient Air Quality Monitoring data and Continuous Emission Monitoring of Stacks is displayed in the digital display board at the main gate of refinery.</td></tr>
<tr><td>x</td><td>The project proponent shall also submit six monthly reports on the status of the compliance of the stipulated environmental conditions including results of monitored data (both in hard copies as well as by e-mail) to the Regional of office of this Ministry/CPCB /SPCB shall monitor the stipulated conditions.</td><td>Complying with.<br>Six monthly monitoring reports are regularly submitted to the RO-MoEF&CC, Bhopal and other authorities along with Six Monthly Compliance Report of Environment Clearance.<br>Last 3 compliance report submission details are given below:
<table>
<tr><th>Period of Compliance</th><th>Date of submission</th></tr>
<tr><td>Dec,22 to May, 23</td><td>01.06.2023</td></tr>
<tr><td>May, 22 to Nov,22</td><td>01.12.2022</td></tr>
<tr><td>Dec,21 to April,22</td><td>10.08.2022</td></tr>
</table></td></tr>
<tr><td>xi</td><td>The environmental statement for each financial year ending 31st March in Form-V as is mandated to be submitted by the project proponent to the concerned State</td><td>Complied.</td></tr>
</table>

| S. No. | EC Conditions | Compliance Status |
|---|---|---|
| | Pollution Control Board as prescribed under the Environment (Protection) rules, 1986 as amended subsequently, shall also be put on the website of the company along with the status of compliance of environmental conditions and shall also be sent to the respective Regional Offices of the MOEF by e-mail. | The Environment Statement in Form-V for the Financial Year: 2022-23 is submitted to MPPCB vide letter No.: BPCL/MPPCB/Consents/2023/13 dated 06.07.2023 & also uploaded on company website. |
| xii. | The Project Proponent shall inform the public that the project has been accorded environment clearance by the Ministry and copies of the clearance letter are available with the SPCB and may also be seen at Website of the Ministry of Environment and Forests at http: envfor.nic.in. This shall be advertised within seven days from the date of issue of the clearance letter, at least in two local newspapers that are widely circulated in the region of which one shall be in the vernacular language of the locality concerned and a copy of the same shall be forwarded to the Regional office. | Complied with.<br>Informed to public by publishing in two local newspapers of Hindustan Times and Dainik Bhaskar on 21st & 23rd June 2015. |
| xiii | Project authorities shall inform the Regional Office as well as the Ministry, the date of financial closure and final approval of the project by the concerned authorities and the date of commencing the land development work. | Date of Commencement of land development: September 2015 |
| 8.0 | The Ministry may revoke or suspend the clearance, if implementations of any of the above conditions are not satisfactory. | We have noted the condition. |
| 9.0 | The Ministry reserves the right to stipulate additional conditions if found necessary. The company in a time bound manner shall implement these conditions. | We have noted the condition. |
| 10.0 | The above conditions will be enforced, inter-alia under the provisions of the water (prevention & control of pollution) Act. 1974 Air (prevention & control water of pollution) Act, 1981, the Environment (protection) Act, 1986, Hazardous waste (Management, Handling and Trans-boundary Movement) Rules, 2008 and the public liability insurance Act, along with their amendments and rules. | Noted. |

**SIX MONTHLY COMPLIANCE REPORT**

**OF**

**ENVIRONMENT CLEARANCE ISSUED BY MOEF & CC, NEW DELHI**

**VIDE LETTER NO.: J-11011/21/1994-1A II (I), Dtd: 20th March, 2009**

| S. No | EC Conditions | Compliance status |
|---|---|---|
| **Specific Conditions** | | |
| i | M/s BORL shall comply with new standards/ norms for Oil Refinery Industry notified under the Environment (Protection) Rules 1986 vide G.S.R. 186 (E) dated 18th March 2008. | New norms prescribed for the refineries were incorporated into the design of the project and are being complied with.<br>Gaseous emissions from all the process units are continuously monitored through Online Continuous Emission Monitoring System available in all the stacks for ensuring compliance with the stipulations. |
| ii | M/s BORL shall comply with all the conditions stipulated vide Ministry's letter of even no. dated 16.02.1995. | Point has been noted.<br>Compliance Status is enclosed in preceding section. |
| iii | The process emissions (SO2, NOX, HC, VOCs and Benzene) from various units shall conform to the standards prescribed by the Madhya Pradesh State Pollution Control Board from time to time. At no time, the emission levels shall go beyond the stipulated standards. In the event of failure of pollution control system(s) adopted by the unit, the unit shall be immediately put out of operation and shall not be restarted until the desired efficiency has been achieved. | Gaseous emissions from all the process units are continuously monitored through online stack monitoring system for ensuring compliance with the stipulations.<br>In addition, the monthly Stack monitoring/analysis is being done through a MoEF&CC approved laboratory. Pl. refer **Annexure-6** for monitoring reports of source emission from process units. |
| iv | Ambient air quality monitoring stations (SPM, $SO_2$, NOx, $H_2S$, Mercaptans, NMHC and Benzene) shall be set up in the Refinery complex in consultation with SPCB, based on occurrence of maximum ground level concentration and down wind direction of wind. The monitoring network must be decided based on modeling exercise to represent short term GLCs. Continuous on-line stack monitoring equipment shall be installed for measurement of $SO_2$, NOx, CO and $O_2$. Data should be displayed on the gate of the refinery and important public places through sign boards. The data should be displayed on the web industry and e-mailed to the Regional office of the Ministry/CPCB/State Pollution Control Board. | Complied with.<br>BORL (Currently BPCL-Bina Refinery) has installed and commissioned 4 nos. of continuous AAQMS in consultation with MPPCB. And connected to MPPCB. One station shifted to MPPCB- Sagar as per the directions of MPPCB.<br>The data is displayed at the main gate through digital display board. |
| v | Monitoring of fugitive emissions shall be carried out as per the guidelines of CPCB by fugitive emission detectors and reports shall be submitted to the Ministry's regional office at Bhopal. For control of fugitive emission all unsaturated hydrocarbon will be routed to the flare system and the flare system shall be designed for smoke less burning. | Complied with.<br>Leak Detection and Repair (LDAR) program is implemented since 2011 for monitoring of fugitive emissions in refinery & dispatch terminal and the reports are submitted along with Six monthly monitoring reports to the RO - MoEF&CC, Bhopal and other authorities along with Six Monthly Compliance Report of Environment Clearance. The summary of the savings done after the repair of identified leaks from June, 2023 to Nov, 2023 is given below: |

<table>
<tr><td></td><td></td><td>
<table>
<tr><th>S. No.</th><th>Total points checked</th><th>Equipment's checked</th></tr>
<tr><td>1</td><td>6086</td><td>Pump, compressors, valves, flanges, exchangers, PSV, PRV etc.</td></tr>
</table>
Total VOC savings after attending leaks: 0.367 kg/day.<br>
Pl. refer Annexure-8.<br>
All unsaturated hydrocarbons are routed to the flare system and the flare system is designed for smoke less burning
</td></tr>
<tr><td>vi</td><td>Fugitive emissions in the form of HC from product storage tank yards etc. must be regularly monitored. Sensors for detecting $H_2S$, HC leakage shall also be provided at strategic locations. The company shall use low sulphur fuel to minimize $SO_2$ emission. Leak Detection and Repair program shall be implemented to control HC/VOC emissions. Work zone monitoring shall be carried out near the storage tanks besides monitoring HCs/VOCs in the work zone.</td><td>
<ul>
<li>All floating roof tanks along with crude oil tanks are provided with primary and secondary seals and all fixed roof tanks are provided with $N_2$ blanketing to reduce fugitive emissions. Sensors for detecting $H_2S$, HC leakage have been installed in the refinery.</li>
<li>Fuel with low sulphur is used for refinery operation.</li>
</ul>
Leak Detection and Repair program is implemented to control HC/VOC emissions and The summary of the savings done after the repair of identified leaks from June, 2023 to Nov, 2023 is attached in the condition v
</td></tr>
<tr><td>vii</td><td>The flare area shall have $H_2S$ and HC detectors with fire alarm system at fire station/ control room. Flare gas recovery system shall be installed. All process units shall have knockout drums in every battery area. The safety release system of light hydrocarbons which are open to atmosphere shall be connected to flare system.</td><td>
Complied
<ul>
<li>H2S and HC detectors are installed at flare area and are connected to control room with alarm system.</li>
<li>Flare gas recovery system is installed.</li>
<li>Knockout drums are available in all process units</li>
<li>The safety release system of hydrocarbons is connected to flare system.</li>
</ul>
</td></tr>
<tr><td>viii</td><td>The wastewater shall be treated in the waste water treatment plant and the treated effluent shall meet the prescribed standards. Efforts shall be made to recycle the treated effluent to achieve zero discharge.</td><td>
<ul>
<li>The wastewater after suitable treatment in ETP is being recycled to RO-DM plant.</li>
<li>Balance if any, are being utilized for gardening / horticulture use within refinery. Continuous Effluent Quality Monitoring System is installed at the outlet of ETP and these analyzers are connected to CPCB and MPPCB for real time monitoring.</li>
<li>Monitoring reports from June, 2023 to Oct, 2023 are enclosed as Annexure-7.</li>
</ul>
</td></tr>
<tr><td>ix</td><td>The project authorities must strictly comply with the rules and regulation with regard to handling and disposal of Hazardous Wastes (Management Handling and Trans Boundary Movement) Rules 1989/2003/2008, wherever applicable. Authorization from the State Pollution Control Board must be obtained for collections/treatment/storage/disposal of hazardous wastes.</td><td>The hazardous waste generated is disposed as per the Hazardous and Other Wastes (Management and Transboundary Movement) Rules, 2016. Hazardous Waste authorization is also obtained from MPPCB, valid till 31.12.2028.</td></tr>
</table>

| | | |
|---|---|---|
| X | The company shall strictly follow all the recommendation mentioned in the charter on Corporate Responsibility for Environmental Protection (CREP). | Complied with.<br>The compliance status of CREP recommendations date 01.06.2013 is attached below:<br>All other CREP recommendations are attached as **Annexure-4** |
| xi | The Company shall take necessary measures to prevent fire hazards, containing oil spill and soil remediation as needed. At place of ground flaring, the overhead flaring stack with knockout drums shall be installed to minimize gaseous emissions during flaring. | Necessary features have been incorporated in refinery design to prevent fire hazards, oil spills etc. Firefighting facilities have been designed confirming to the relevant OISD standards (OISD-STD-116, OISD-GDN-115 & 200). Additionally, a Vacuum truck has been procured for handling of oil spills. All flare lines are routed to an overhead flaring stack with knockout drum. |
| xii | To prevent fire and explosion at Oil and Gas facility, potential ignition sources shall be kept to a minimum and adequate separation distance between potential ignition sources and flammable material shall be in place. | Complied with.<br>For refinery expansion, separation distance between various facilities in the refinery has been kept in accordance with applicable OISD standards (OISD-STD-118). |
| xiii | Occupational health surveillance of worker shall be done on a regular basis and records maintained as per the Factories Act. | Periodical medical surveillance of workers is done regularly and records are being maintained. |
| xiv | Greenbelt shall be developed to mitigate the effect of fugitive emission all around the plant in a minimum 33% plant area in consultation with DFO as per CPCB guidelines. | Green belt development is a continuous activity in and around boundaries of refinery. Green belt of 200m width along the boundary of refinery is developed with local species like Neem, Sheesham, Kadamba, Arabic gum, scholar tree, indian rosewood, red forest gum etc. A total of 4,01,696 saplings are planted so far in the refinery.<br>Pl. refer **Annexure-11** for brief details on greenbelt development. |
| xv | M/s BORL shall undertake measures for rain water harvesting to recharge the ground water and minimize fresh water consumption. | Rainwater harvesting measures have been implemented in refinery township.<br>Rain water harvesting pond in 12 acres with 10 recharge wells having a capacity of 173156 m3 and recharge capacity of 25973 m3 is constructed in refinery premises. |
| 6 | In case of change in the scope of the project, M/s, BORL shall obtain fresh environment clearance under the provisions of EIA Notification, 2006 | Point has been noted. |

**SIX MONTHLY COMPLIANCE REPORT**

**OF**

**ENVIRONMENT CLEARANCE ISSUED BY MOEF & CC, NEW DELHI**

**VIDE LETTER NO.: No: J-11011/21/94-IA-II (I), Dtd: 16-02-1995**

**FOR**

**6 MMTPA GRASSROOT REFINERY, INCLUDING CAPTIVE POWER PLANT (CPP) AND MARKETING TERMINAL (BY BPCL) AT BINA, M.P. OF BHARAT OMAN REFINERIES LIMITED**

| S. No | EC Conditions<br>[EC. No: J-11011/21/94-IA-II (I), Dtd: 16-02-1995] | Compliance status |
|---|---|---|
| i | The project authority must strictly adhere to the stipulations made by the M.P. Pollution Control Board and the State Government. | All the conditions stipulated by Pollution Control Board of Madhya Pradesh through Air, Water & Hazardous authorizations are strictly adhered to and compliance of same is submitted to MPPCB regularly. Pl. refer **Annexure-1.** |
| ii | Any expansion of the plant, either with the existing product mix or new product(s) or storage facilities etc. can be taken up only with the prior approval of this ministry. | Any expansion or modernization in the plant will be taken up only with the prior approval of the Ministry of Environment & Forests. |
| iii | Total emissions of $SO_2$ from the entire refinery complex should not exceed the range 30 - 40 TPD. | Sulphur recovery efficiency of Sulphur Recovery Unit and Tail gas treatment(TGT) sections is >99.9%.<br>The sulphur present in crude oil gets evolved mainly in the form of H2S gas during various stages of processing. Sulphur Recover Unit (SRU) recovers the Sulphur from Hydrogen Sulphide (H2S) rich gas stream which is formed in various secondary processing units. H2S rich gas is the feed to SRU & is treated in the Main Combustion Chamber & followed by two stage Clause reaction to convert H2S into elemental Sulphur. Residual Sulphur compounds are further treated in Tail Gas Treating Unit (TGTU) in presence of catalyst. Over all very high Sulphur recovery is achieved in SRU with efficiency of >99.9%. |
| iv | The gaseous emissions from various process units should conform to the standards prescribed by the concerned authorities, from time to time. At no time the emissions level should go beyond the stipulated standards. In the event of failure of any pollution control system adopted by the unit, the respective unit should be shut down immediately and should not be restarted until the control measures are rectified to achieve the desired efficiency. | Gaseous emissions from all the process units are continuously monitored through Online Continuous Emission Monitoring System available in all the stacks for ensuring compliance with the stipulations.<br>In addition, the monthly Stack monitoring/analysis is being done through a MoEF&CC approved laboratory. Monitoring reports from June, 2023 to Oct, 2023 are enclosed as **Annexure-5 & 6** for Ambient air quality and source emission monitoring reports. |
| v | Sulphur recovery units with more than 99% efficiency for sulphur recovery should be provided | Sulphur recovery unit with Tail Gas Treatment Unit (TGTU) with >99.5% efficiency for Sulphur recovery is operated |
| vi | Low NOx burners to avoid excessive formulation of NOx should be provided. | Low NOx burners are provided in all fired heaters of the refinery for reduction of NOx emissions. |
| vii | At least four ambient air quality monitoring stations should be set up in the refinery area in the down wind direction as well as where maximum ground level concentrations of $SO_2$, NOx, HC and SPM are anticipated. The monitoring network should be decided based on the modeling exercise to represent the short term GLCs. A mobile van with adequate facilities to monitor ambient air quality outside the refinery premises should also planned. | Complied with.<br>BORL (Currently BPCL-Bina Refinery) has installed and commissioned 4 nos. of continuous AAQMS in consultation with MPPCB. And connected to MPPCB. One station shifted to MPPCB- Sagar as per the directions of MPPCB.<br>A mobile van with adequate facilities to monitor ambient air quality outside the refinery premises is available. |

<table>
<tr><td>viii</td><td>Fugitive emissions of HC from storage tanks, crude oil tanks etc., should be minimized by adopting necessary measures. Action plan should be prepared for this purpose and submitted to this ministry.</td><td>All floating roof tanks along with crude oil tanks are provided with primary and secondary seals and all fixed roof tanks are provided with $N_2$ blanketing to reduce fugitive emissions.<br>Regular fugitive emissions monitoring being done to check the VOC emissions.</td></tr>
<tr><td>ix</td><td>Adequate facilities for monitoring the fugitive emissions should be planned</td><td>Leak Detection and Repair (LDAR) program is implemented since 2011 for monitoring of fugitive emissions in refinery & dispatch terminal and the reports are submitted along with Six monthly monitoring reports to the RO - MoEF&CC, Bhopal and other authorities along with Six Monthly Compliance Report of Environment Clearance. The summary of the savings done after the repair of identified leaks from June, 2023 to Nov, 2023 is given below:<br><br>
<table>
<tr><th>S. No.</th><th>Total points checked</th><th>Equipment’s checked</th></tr>
<tr><td>1</td><td>6086</td><td>Pump, compressors, valves, flanges, exchangers, PSV, PRV etc.</td></tr>
</table>
Total VOC savings after attending leaks: 0.367 kg/day.<br>Pl. refer Annexure-8 for brief details of Leaks identified & closed during the period.</td></tr>
<tr><td>x</td><td>The stack should be of appropriate design and height and should be attached to pollution control system where ever necessary. Height of stacks attached to AVU, HCU, CPP etc. should not be less than 100m.</td><td>Stacks of appropriate design and adequate height are provided in all units. Height of stacks attached to CDU, HCU UB & CPP units is 100 m.
<table>
<tr><th>Name of section</th><th>Stack Height (meters)</th><th>Control equipment to be installed</th></tr>
<tr><td>Boilers (CPP)</td><td>100</td><td>Cyclone, E.S.P, Green Belt</td></tr>
<tr><td>Boiler (Utility)</td><td>100</td><td>Heater/Furnace-Low Sulphur Fuel, Low NOX Burner</td></tr>
<tr><td>CDU/VDU Heater (Stack-1)</td><td>100</td><td>Green Belt, Heater/Furnace-Low Sulphur Fuel, Low NOX Burner</td></tr>
<tr><td>HCU/Dhdt heater (Stack-6)</td><td>100</td><td>Green Belt, Heater/Furnace-Low Sulphur Fuel</td></tr>
<tr><td>Furnace (Heaters in KHDS)</td><td>60</td><td>Green Belt Heater/Furnace-Low Sulphur Fuel, Low NOX Burner</td></tr>
<tr><td>Furnace (NHT Auxiliary Reboiler)</td><td>60</td><td>Green Belt , Heater/Furnace-Low Sulphur Fuel, Low NOX Burner</td></tr>
</table></td></tr>
</table>

| | | |
|---|---|---|
| | | Furnace (Stack -2 DCU heaters) \| 60 \| Green Belt , Heater/Furnace-Low Sulphur Fuel, Low NOX Burner<br>Furnace (Stack-4 Hot-oil heater) \| 60 \| Green Belt , Heater/Furnace-Low Sulphur Fuel, Low NOX Burner<br>Furnace (CCR Auxiliary Inter Heater) \| 65 \| Green Belt , Heater/Furnace-Low Sulphur Fuel, Low NOX Burner<br>Furnace (Stack -7 HGU heater) \| 70 \| Green Belt , Heater/Furnace-Low Sulphur Fuel, Low NOX Burner<br>Incinerator (Stack -3 SRU Incinerator) \| 80 \| Green Belt , Heater/Furnace-Low Sulphur Fuel, Low NOX Burner<br>NHT/CCR heater (Stack-5 MS block Heaters) \| 75 \| Green Belt , Heater/Furnace-Low Sulphur Fuel, Low NOX Burner |
| xi | Designing of LPG spheres including the exclusion zone should be finalized in consultation and approval of the department of Explosives. | Not applicable as only LPG mounded bullets are provided for storage instead of spheres. |
| xii | Ground water should not be tapped for the industrial as well as domestic uses including the township. Alternate source has to be finalized keeping in view its impact on other competent users. | Betwa river water is used to meet the water requirement of refinery and township. Therefore, no ground water is tapped. |
| xiii | Recycling/Reuse of the treated effluent to the maximum extent possible should be planned. | Treated effluents from ETP are recycled to RO-DM plant. Balance treated effluent is being utilized for greenbelt development inside refinery. |
| xiv | Adequate numbers of influent and effluents quality monitoring stations have to be planned with adequate facilities especially for the parameters like phenols, sulphides, oil and grease, suspended solids, BOD, COD, pH and flow. | Influent & effluent quality monitoring is carried out on regular basis by in-house laboratory & also by an external MoEF approved laboratory. Pl. refer **Annexure-7** for effluent monitoring reports.<br><br>Also installed Continuous Effluent Quality Monitoring Station at ETP out let for the parameters such as pH, BOD, COD, TSS and Flow as per the CPCB guidelines and real-time data is transferred to MPPCB and CPCB portals continuously. |
| xv | System to recover oil from the oily sludge and incinerator for burning the residues should be provided. | For maximum recovery of hydrocarbons, ETP Oily sludge is recycled to the Delayed Coker Unit. Alternatively, Bio-remediation facility has been provided for conversion of residual oil from the oily sludge. BORL (Currently BPCL-Bina Refinery) has also tied-up with TSDF, Dhar, M.P. for incineration of ETP sludge. |

<table>
<tr><td>xvi</td><td>Hazardous substances and solid wastes should be handled, stored and disposed off as per the hazardous wastes (Management and Handling) Rules, 1989 of the EPA 1986.</td><td>The hazardous waste generated is stored, handled and disposed as per the Hazardous and Other Wastes (Management and Transboundary Movement) Rules, 2016. Hazardous Waste authorization is also obtained from MPPCB, valid till 31.12.2028.</td></tr>
<tr><td>xvii</td><td>Cutting of trees from the project sites should be kept to minimum while developing the site and planning the infrastructural facilities.</td><td>Cutting of trees has been kept minimum during the site and planning of infrastructural facilities</td></tr>
<tr><td>xviii</td><td>The industrial township should not be located in the down wind direction with respect to the refinery.</td><td>The residential colony is developed on southern side of the refinery with respect to predominant wind pattern</td></tr>
<tr><td>xix</td><td>Adequate sanitation facilities and cooking fuel should be provided to the laborers to avoid tree cutting and nuisance in the area.</td><td>Adequate sanitation facilities were provided to laborers</td></tr>
<tr><td>xx</td><td>The labours of the contractor should leave the place after completion of the work at site to avoid creation of slum in the adjoining areas of the project.</td><td>The temporary housing of the construction labour was removed from the project area to avoid creation of slum in the adjoining area</td></tr>
<tr><td>xxi</td><td>The overall noise levels in and around the plant area should be kept well within the standards (85 dBA) by providing acoustic hoods, silencers etc on all the sources of noise generation.</td><td>Adequate measures are incorporated during the detailed engineering of the project such that noise levels in and around the plant shall be within the noise levels. Summary of the noise survey reports is as below:
<table>
<tr><th>Month</th><th>Parameter</th><th>Tower No.1</th><th>Tower No.3</th><th>Tower No.5</th><th>Tower No.7</th></tr>
<tr><td rowspan="3">Sept-23</td><td>Leq Day</td><td>60.3</td><td>53.3</td><td>54.7</td><td>59.6</td></tr>
<tr><td>Leq Night</td><td>57</td><td>51.1</td><td>52.4</td><td>57.5</td></tr>
<tr><td>Leq (day/night)</td><td>59.4</td><td>52.7</td><td>54.1</td><td>59</td></tr>
<tr><td rowspan="4">June-23</td><td>Parameter</td><td>Tower No.2</td><td>Tower No.4</td><td>Tower No.6</td><td>Tower No.8</td></tr>
<tr><td>Leq Day</td><td>56</td><td>60.9</td><td>54.7</td><td>59.5</td></tr>
<tr><td>Leq Night</td><td>53.2</td><td>54.6</td><td>52.5</td><td>53.8</td></tr>
<tr><td>Leq (day/night)</td><td>55.3</td><td>59.6</td><td>54.1</td><td>58.3</td></tr>
</table>
Pl. refer the Annexure-9 for the noise reports.</td></tr>
<tr><td>xxii</td><td>A green belt of at least 200 m and adequate density in the downwind direction using native plant species should be developed in consultation with the local DFO.</td><td>Green belt development is a continuous activity in and around boundaries of refinery. Green belt of 200m width along the boundary of refinery is developed with local species like Neem, Sheesham, Kadamba, Arabic gum, scholar tree, indian rosewood, red forest gum etc. A total of 4,01,696 saplings are planted so far in the refinery.</td></tr>
</table>

| | | |
|---|---|---|
| | | Pl. refer **Annexure-11** for greenbelt development details along with species selection. |
| xxiii | Necessary approvals from the Chief Explosives Directorate, Inspector of Factories, Fire Safety Inspector etc., should be obtained and copies of approval letters be made available to this ministry. | Necessary approvals from concerned authorities are obtained and copies submitted to your office vide our letter No. BORL/MoEF/EC/2018/03 dated 01/01/2019. |
| xxiv | The project authority should set up laboratory facilities for collection and analysis of samples under the supervision of competent technical personnel, who will directly report to the chief Executive. | The laboratory facility had been established with competent technical personnel reporting to senior management and is NABL accredited. |
| xxv | An Environmental Management Cell should be established with suitably qualified people to carry out various functions and should be set up under the control of a senior executive who will report directly to the head of the organization. | Environment Management Cell has been set up with qualified staff to ensure the effective implementation of environmental safeguards.<br>Pl. refer **Annexure-10** for the organogram of Environment dept. |
| xxvi | Medical surveillance of workers should be done regularly to avoid possibility of contracting occupational diseases against the worker engaged in the various plants and record maintained. | Periodical medical surveillance of workers is done regularly and records are being maintained. |
| xxvii | The project authorities should carry out a water balance study at the proposed weir site and submit the report within 12 months. | Water balance study has been carried out at the weir site and report submitted. |
| xxviii | The funds earmarked for the environmental protection measures should not be diverted for other purposes and year wise expenditure should be reported to this ministry. | Complied.<br>• Separate budget has been allocated to the Environment Department. Allocated budget for the FY: 2023-24 is INR 718 Lakhs.<br>• Environment budget is not being diverted to any other purpose. |
| 3 | The project authorities should also comply with the additional stipulations and conditions prescribed in the EIA and risk analysis reports. | Being Complied.<br>Pl. refer **Annexure 2 & 3** for compliance status of EIA and Risk Analysis reports respectively. |
| 4 | The ministry or any other competent authority may stipulate any further conditions, after assessing the pollution caused after the implementation of the project. | Noted and agreed to comply with the directions of the MoEF& CC, if any. |
| 5 | The ministry may revoke or suspend the clearance, if implementation of any of the above conditions is not satisfactory. | Point has been noted. |
| 6 | The above conditions will be enforced inter-alia under the provisions of the water (prevention and control of pollution) Act 1974, the Air (Prevention and control of pollution) Act 1981, The Environment Protection Act – 1986. | Point has been noted. |

# STATUS OF COMPLIANCE

(Consent No: AW-58847, Validity: 30.11.2025, Outward No. 118813, 05.09.2023)

**Grant of Consent to Operate under section 25 of the Water (Prevention & Control of Pollution) Act,1974 under section 21 of the Air (Prevention & Control of Pollution) Act,1981.**

<table>
<tr><th>S.N.</th><th>CONSENT CONDITIONS</th><th>COMPLIANCE STATUS / REMARKS</th></tr>
<tr><td></td><td>

***SUBJECT TO THE FOLLOWING CONDITIONS: -***<br>
a. Location: Vill- Agasode, Bina, Dist.: Sagar (M.P.)<br>
b. The capital investment in Crs: Rs. 15733Cr<br>
c. Product & Production Capacity:

<table>
<tr><th>Product</th><th>Qty/year</th></tr>
<tr><td>Petroleum Products Like LPG, Naphtha, Euro-III Equivalent Motor Spirit Euro-IV Equivalent Motor Spirit (MS), Aviation Turbine Fuel (ATF), Superior Kerosene Oil (SKO), Euro-III Equivalent Motor Spirit (HSD), Euro-IV Equivalent Motor Spirit (HSD), Sulphur,<br>Pet coke</td><td>7.800 MMTPA (Seven point Eight Million metric tonne per annum)</td></tr>
<tr><td>Marketing Terminal Storage & Dispatch Capacity</td><td>7.800 MMTPA (Seven point Eight MMTPA)</td></tr>
<tr><td>Generation of Electricity by (Captive Power Plant)</td><td>3 X 33 MWH (Total Ninety-nine MWH)</td></tr>
<tr><td>Kerosene Hydro De-Sulphurisation Unit (KHDS)</td><td>600000.000 MT/Year (Six lakh M.T.)</td></tr>
</table>

The Validity of the renewal of consent shall be up to 30/11/2023 and has to be renewed before expiry of consent validity. Online application through XGN with annual license fees in this regard shall be submitted to this office 6 month before expiry of the consent. Board reserves the right to amend/cancel / revoke the above condition in part or whole as and when required.<br>
**Enclosures: -**<br>
* Conditions under Water Act, 1974<br>
* Conditions under Air Act, 1981<br>
* General conditions

</td><td>Noted</td></tr>
<tr><td></td><td>***CONDITIONS PERTAINING TO WATER (PREVENTION & CONTROL OF POLLUTION) ACT 1974 :-***</td><td></td></tr>
<tr><td>1.</td><td>The daily quantity of trade effluent generation shall not exceed 7368.000 KL/day, and the daily quantity of sewage generation shall not exceed 1104.000 KL/day</td><td>Being complied.</td></tr>
<tr><td>2.</td><td>

**Trade Effluent Treatment: -**<br>
The applicant shall operate and maintain effluent treatment system as per the proposal submitted to the Board and maintain the same properly to achieve following standards -

<table>
<tr><td>pH</td><td>Between</td><td>5.5 – 9.0</td><td>TDS</td><td>Not exceed</td><td>2100 mg/l.</td></tr>
<tr><td>Suspended Solids</td><td>Not exceed</td><td>100 mg/l.</td><td>Chlorides</td><td>Not exceed</td><td>1000 mg/l.</td></tr>
<tr><td>BOD 3 Days 27$^0$C</td><td>Not exceed</td><td>30 mg/l.</td><td></td><td></td><td></td></tr>
<tr><td>COD</td><td>Not exceed</td><td>250 mg/l.</td><td></td><td></td><td></td></tr>
<tr><td>Oil and grease</td><td>Not exceed</td><td>10 mg/l.</td><td></td><td></td><td></td></tr>
</table>

***For other parameters general standards of discharge as notified under EP Act 1986 shall be applicable.***

</td><td>Being complied. A modern ETP is setup and operated continuously to meet the prescribed standards.<br>Please refer **Annexure-7** for analysis reports.</td></tr>
<tr><td>3.</td><td>

**Sewage Treatment: -** The applicant shall operate and maintain sewage treatment system to achieve following standards-

<table>
<tr><td>pH</td><td>Between</td><td>5.5 – 9.0</td></tr>
<tr><td>Suspended Solids</td><td>Not exceed</td><td>100 mg/l.</td></tr>
<tr><td>BOD 3 Days 27$^0$C</td><td>Not exceed</td><td>30 mg/l.</td></tr>
<tr><td>COD</td><td>Not exceed</td><td>250 mg/l.</td></tr>
<tr><td>Oil and grease</td><td>Not exceed</td><td>10 mg/l.</td></tr>
<tr><td>Fecal Coliform</td><td>Not to exceed</td><td>1000 (MPN/100 ml)</td></tr>
</table>

.

</td><td>Being complied. Please refer **Annexure-7** for analysis reports.</td></tr>
</table>

<table>
<tr><th>S.N.</th><th>CONSENT CONDITIONS</th><th>COMPLIANCE STATUS / REMARKS</th></tr>
<tr><td></td><td>PM-Stack 150 MG/nm3, NOX-Amb 80 MICROG/M3,RSPM(PM10)-Amb 100 MICROG/M3, SO2-Amb 80 MICROG/M3, SO2-STACK 30000 KG per Day, pH 9.0 pH Units, Total Dissolved Solids 2100 mg/l, Suspended Solids 100 mg/l, Chemical Oxygen Demand 250 mg/l, Oil& Grease 10mg/l, Phenolic Compounds 0.35 mg/l, Sulphide 0.5 mg/l, B.O.D (3 Days 27C) 30 mg/l</td><td></td></tr>
<tr><td></td><td><table>
<tr><th>Sr</th><th>Water Code (Qty in Klpd – Kilo Ltr Per Day)</th><th>WC : 44064.000</th><th>WWG : 8472.000</th><th>Water Source</th></tr>
<tr><td>1</td><td>Domestic Purpose</td><td>2088.000</td><td>1104.000</td><td>River</td></tr>
<tr><td>2</td><td>Mnfg process</td><td>41976.000</td><td>7368.000</td><td>River</td></tr>
</table></td><td></td></tr>
<tr><td>4.</td><td>The effluent shall be treated up to prescribed Standards and reuse in the process, for cooling and for green belt devolvement/gardening within premises. Hence zero discharge condition shall be practiced. In no case treated effluent shall be discharged outside of industry/unit premises.</td><td>Treated effluents from ETP are recycled to RO-DM Plant. Balance treated effluent is being utilized for green belt development inside refinery. Hence Zero discharge condition is maintained.</td></tr>
<tr><td>5.</td><td>Water meter preferably electromagnetic/ultrasonic type with digital flow recording facilities shall be installed separately for category wise consumption of water for Industrial cooling/boiler feed, process & domestic purposes and data shall be submitted online through XGN monthly patrak/statements. The industry/unit shall also monitor the treated wastewater flow and report the same online through monthly patrak/statements.</td><td>Being complied</td></tr>
<tr><td>6.</td><td>Any change in production capacity, process, raw material used etc. and for any enhancement of the above prior permission of the Board shall be obtained. All authorized discharges shall be consistent with terms and conditions of this consent. Facility expansions, production increases or process modifications which result new or increased discharges of pollutants must be reported by submission of a fresh consent application for prior permission of the Board</td><td>Noted.</td></tr>
<tr><td>7.</td><td>All treatment/control facilities/systems installed or used by the applicant shall be regularly maintained in good working order and operate effectively/efficiently to achieve compliance of the terms and conditions of this consent</td><td>Being complied.</td></tr>
<tr><td>8.</td><td>The specific effluent Limitations and pollution control systems application to the discharge permitted herein are set forth as above conditions.</td><td></td></tr>
<tr><td>9.</td><td>Compilation of Monitoring data-<br>i. Samples and measurements taken to meet the monitoring requirements specified above shall be representative of the volume and nature of monitored discharge.<br>ii. Following promulgation of guidelines establishing test procedures for the analysis of pollutants, all sampling and analytical methods used to meet the monitoring requirements specified above shall conform to such guidelines unless otherwise specified sampling and analytical methods shall conform to the latest edition of the Indian Standard specifications<br>and where it is not specified the guidelines as per standard methods for the examination of Water and Waste latest edition of the American Public Health Association, New York U.S.A. shall be used.<br>iii. The applicant shall take samples and measurement to meet the monthly requirements specified above and report online through XGN the same to the Board.</td><td>Noted.</td></tr>
<tr><td>10.</td><td>Recording of Monitoring Activities & Results-<br>i. The applicant shall make and maintain online records of all information resulting from monitoring activities by this Consent.<br>ii. The applicant shall record for each measurement of samples taken pursuant to the requirements of this Consent as follows:<br>(i) The date, exact place and time of sampling<br>(ii) The dates on which analysis were performed<br>(iii)Who performed the analysis?<br>(iv)The analytical techniques or methods used and</td><td>Noted.</td></tr>
</table>

| S.N. | CONSENT CONDITIONS | COMPLIANCE STATUS / REMARKS |
|---|---|---|
| | (v)The result of all required analysis<br>iii. If the applicant monitors any Pollutant more frequently as is by this Consent he shells include the results of such monitoring in the calculation and reporting of values required in the discharge monitoring reports which may be prescribed by the Board. Such increased frequency shall be indicated on the Discharge Monitoring Report Form.<br>iv. The applicant shall retain for a minimum of 3 years all records of monitoring activities including all records of Calibration and maintenance of instrumentation and original strip chart regarding continuous monitoring instrumentation. The period of retention shall be extended during the course of any unresolved litigation regarding the discharge of pollutants by the applicant or when requested by Central or State Board or the court. | |
| 11. | **Reporting of Monitoring Results: -**<br>Monitoring Information required by this Consent shall be summarized and reported by submitting a Discharge Monitoring report on line to the Board. | Noted. |
| 12. | **Limitation of discharge of oil Hazardous Substance in harmful quantities: -**<br>The applicant shall not discharge oil or other hazardous substances in quantities defined as harmful in relevant regulations into natural water course. Nothing in this Consent shall be deemed to preclude the institution of any legal action nor relive the applicant from any responsibilities, liabilities, or penalties to which the applicant is or may be subject to clauses. | Noted. |
| 13. | **Limitation of visible floating solids and foam:**<br>During the period beginning date of issuance the applicant shall not discharge floating solids or visible foam. | Noted. |
| 14. | **Disposal of Collected Solid waste/Sludge-**<br>All hazardous waste/sludge shall be disposed of as per the Authorization issued under Hazardous & other waste (M&TM) Rules 2016. And/other Solids Sludges, dirt, silt or other pollutant separated from or resulting from treatment shall be disposed of in such a manner as to prevent any pollutant from such materials from entering any such water Any live fish, Shall fish or other animal collected or trapped as a result of intake water screening or treatment may be returned to eaters body habitat. | Noted. |
| 15. | **Provision for Electric Power Failure-**<br>The applicant shall assure to the consent issuing authority that the applicant has installed or provided for an alternative electric power source sufficient to operate all facilities utilized by the applicant to maintain compliance with the terms and conditions of the Consent. | Complied with. |
| 16. | **Prohibition of Bypass system of treatment facilities-**<br>The diversion or by-pass of any discharge from facilities utilized by the applicant to maintain compliance with the terms and conditions of this Consent in prohibited except:<br>i. where unavoidable to prevent loss of life or severe property damage, or<br>ii. Where excessive storm drainage or run off would damage any facilities necessary for compliance with the terms and conditions of this Consent. The applicant shall immediately notify the consent issuing authorities in writing of each such diversion or by-pass in accordance with the procedure specified above for reporting non-compliance. | Noted. |
| 17. | Industry management shall submit the information online through XGN in reference to compliance of consent conditions. | Being Complied. |
| | ***Additional Water condition*** | |
| 18. | The industry shall comply with the standards / norms for Oil Refinery Industry notified under the Environment (Protection) Rules, 1986 vide GSR 186 (E) dated 18/3/2008. | Being Complied. |
| 19. | Oil Catchers / oil traps shall be maintained at all locations in rain / storm water drainage system inside the premises. Proper oil spillage prevention & management plan shall be prepared and implemented to avoid spillage / leakage of Oil / petroleum products and ensure regular monitoring. | Complied with. |
| 20. | All contaminated and odorous waste water streams shall be handled in closed systems from the source to the primary treatment stages (oil-water separator and equalization tanks). | Complied with. |
| 21. | The collection system shall be covered with water seals (traps) on sewers and drains and gas tight covers on junction boxes. | Complied with. |
| 22. | Oil-water separators and equalization tanks shall be provided with floating/fixed covers. The off-gas generated shall be treated to remove at least 90% of VOC and eliminate odour. The system design shall ensure safety (prevention of formation of explosive mixture, possible detonation and reduce the impact) by dilution with air/inert gas, installing LEL detector including control devices, | Complied with. |

| S.N. | CONSENT CONDITIONS | COMPLIANCE STATUS / REMARKS |
|---|---|---|
| | seal drums, detonation arrestors etc. The system shall be designed and operated for safe maintenance of the collection and primary treatment systems. | |
| 23. | The industry shall take all measures that in no case the oil spills and industrial effluent goes into rain water / storm water drains. No effluent shall go out of the premises and in no case it shall pollute river Betwa. | Complied with. |
| 24. | The industry shall ensure that the overflow water from the fly ash collection area is properly collected and recycled. | Complied with. |
| | ***CONDITIONS PERTAINING TO AIR (PREVENTION & CONTROL OF POLLUTION) ACT 1981 :-*** | |
| 1. | The applicant shall operate and maintain Air Pollution Control System consisting to achieve the level of pollutants to the following standards: - | Being Complied.<br><br>Please refer **Annexure-6** For stack monitoring reports. |

| Name of section | Capacity | Stack Height (meters) | Fuel | Control equipment to be installed | P.M, SOX, NOX(mg/NM3) |
|---|---|---|---|---|---|
| Boiler (**Stack-8** CPP) | 3 X 275 TPH | 100 | Pet coke - 60 TPH | Cyclone, E.S.P, Heater/ Furnace – Low Sulphur Fuel, Low Nox burner | 50,600,300 Other Parameters as per GSR 186(E) dated 18/3/2008 |
| Boiler (Utility) | 160 TPH | 100 | FUR-13 TPH | Heater/Furnace-Low Sulphur Fuel, Low NOX Burner | |
| CDU/VDU Heater (Stack-1) | - | 100 | F.O.- 10141 Kg/Hr | Heater/Furnace-Low Sulphur Fuel, Low NOX Burner | |
| D.G. Sets | 125 KVA | 6 | HSD | Heater/Furnace-Low Sulphur Fuel | As per MoEF&CC & CPCB Notification |
| D.G. Sets | 62.5 KVA | 12 | HSD-15.31 Lit./Hour | Acoustic Enclosure, | |
| D.G. Sets | 62.5 KVA | 12 | HSD-15.31 Lit./Hour | Acoustic Enclosure, Heater/Furnace-Low Sulphur Fuel | |
| D.G. Sets (Stand By) | 625 KVA | 13 | Diesel | Heater/Furnace-Low Sulphur Fuel | |
| D.G. Sets | 2000 KVA | 30 | Diesel | Heater/Furnace-Low Sulphur Fuel | |
| D.G. Sets | 3000 KVA | 30 | HSD | Heater/Furnace-Low Sulphur Fuel | |
| HCU/DHDT heater (Stack-6) | Stack- 6 hcu/dhdt heater | 100 | F.G.-9925 Kg | Heater/Furnace-Low Sulphur Fuel | 50,850,350 Other Parameters as per GSR 186(E) dated 18/3/2008 |
| Furnace | Heaters In KHDS | 60 | F.G-9925 Kg | Heater/Furnace-Low Sulphur Fuel, Low NOX Burner | |
| Furnace | NHT Auxiliary Reboiler | - | - | Heater/Furnace-Low Sulphur Fuel, Low NOX Burner | |
| Furnace | Stack-2 DCU Heaters | 60 | FUR-5604 Kg | Heater/Furnace-Low Sulphur Fuel, Low NOX Burner | |
| Furnace | Stack-4 Hot-Oil Heater | 60 | FUR-2892 Kg | Heater/Furnace-Low Sulphur Fuel, Low NOX Burner | |
| Furnace | CCR Auxiliary Inter Heater | 65 | F.G-847 Kg | Heater/Furnace-Low Sulphur Fuel, Low NOX Burner | |
| Furnace | Stack-7 HGU Heater | 70 | F.G-50 Kg | Heater/Furnace-Low Sulphur Fuel, Low NOX Burner | |
| NHT/CCR heater | Stack-5 MS Block Heaters | 75 | FUR-8533 Kg | Heater/Furnace-Low Sulphur Fuel, Low NOX Burner | |

| S.N. | CONSENT CONDITIONS | COMPLIANCE STATUS / REMARKS |
|---|---|---|
| | Incinerator \| Stack-3 SRU Incinerator \| 80 \| F.G-1200 Kg \| Heater/Furnace-Low Sulphur Fuel, Low NOX Burner \| 150,99.5%,50 | |
| 2. | Ambient air quality at the boundary of the industry/unit premises shall be monitored and reported to the Board regularly on quarterly basis: The Ambient air quality norms are prescribsed in MoEF gazette notification no. GSR/826(E), dated: 16/11/09. Some of the parameters are as follows:<br>a. Particulate Matter (less than 10 micron) - 100 µg/m³ (PM10 µg/m³ 24 hrs. basis)<br>b. Particulate Matter (less than 2.5 micron) - 60 µg/m³ (PM2.5 µg/m³ 24 hrs. basis)<br>c. Sulphur Dioxide [SO2] (24 hrs. Basis) - 80 µg/m³<br>d. Nitrogen Oxides [NOx] (24 hrs. Basis) - 80 µg/m³<br>e. Carbon Monoxide [CO] (8 hrs. Basis) - 2000 µg/m³ | Being Complied.<br><br>Please refer **Annexure-5** For Ambient Air Quality monitoring reports. |
| 3. | The industry shall take adequate measures for control of noise level generated from industrial activities within the premises less than 75 dB(A) during day time and 70 dB(A) during night time. | Complied with. Pl. refer the **Annexure-9** for the noise reports |
| 4. | Industry/Unit shall provide with each stack port hole with safe platform of 1-meter width with support & spiral ladder/Stepped ladder with hand rail up to monitoring platform as per specifications given in part-III emission regulation of CPCB. In no case monkey ladder shall be allowed as stack monitoring facility. | Being Complied. |
| 5. | The industry/unit shall make the necessary arrangements for control of the fugitive emission from any source of emission/section/activities. | Being Complied. |
| 6. | All other fugitive emission sources such as leakages, seepages, spillages etc shall be ensured to be plugged or sealed or made airtight to avoid the public nuisance. | Being Complied. |
| 7. | The industry/ unit shall ensure all necessary arrangements for control of odour nuisance from the industrial activities or process within premises. | Being Complied. |
| 8. | All the internal roads shall be made pucca to control the fugitive emissions of particulate matter generated due to transportation and internal movements. Good housekeeping practices shall be adopted to avoid leakages, seepages, spillages etc. | Being Complied. |
| 9. | Industry shall take effective steps for extensive tree plantation within or around the industry/unit premises for general improvement of environmental conditions and as stated in additional condition. | Being Complied. |
| | ***Additional Air condition:-*** | |
| 10. | Industry shall use low sulphur fuel for minimization of SO2 emission. The recovery of SO2 in the SRU shall not be less than 99.5 %. | Being Complied. |
| 11. | Industry shall operate & maintain NOx burners in heater/furnaces to minimize NOx emission. | Being Complied. |
| 12 | Industry shall comply all the emissions norms, standards for equipment leaks as per the Environment (Protection) Act, 1986 notification No. GSR/186(E) dated: 18/03/08 and take all measures to control fugitive emission as per the notifications. | Being Complied. |
| 13 | The process emissions (SO2, NOx, HC, VOC's and Benzene) from various units shall also confirm to the standards prescribed under the Environment (Protection) Act, 1986 notification No. GSR/186(E) dated: 18/03/08. At no time, the emission level shall go beyond the stipulated standards. In the even failures of pollution control systems adopted by the unit, the unit shall be immediately put out of operation and shall be restarted until the desired efficiency has been achieved. | Being Complied. |
| 14 | The industry shall take adequate measures to minimize fugitive emission of volatile organic carbons (VOC's) due to leakages and evaporation from processing/storage areas handling hydrocarbons. | Being Complied. |
| 15 | The industry shall ensure that the total emission of SO2 from the entire refinery complex should not exceed the desired limits. | Being Complied. |
| 16 | Fugitive emission in the form of HC, product storage tank, yard etc. must be regularly monitored. Sensors for detecting H2S, HC leakage shall also be provided at strategic locations. The industry shall use low sulphur fuel to minimize SO2 emission. Leak Detection & Repair Programme shall be implemented to control HC/VOC emission. Work zone monitoring shall be carried out near the storage tanks besides monitoring shall be carried out near the storage tanks besides monitoring or HCs/VOCs in the work done. | Being complied.<br>All floating roof tanks along with crude oil tanks are provided with primary and secondary seals and all fixed roof tanks are provided with $N_2$ |

<table>
<tr><th>S.N.</th><th>CONSENT CONDITIONS</th><th>COMPLIANCE STATUS / REMARKS</th></tr>
<tr><td></td><td></td><td>blanketing to reduce fugitive emissions.<br>Sensors for detecting $H_2S$, HC leakage have been installed in the refinery. Only low sulphur fuels are used in refinery to minimize $SO_2$ emissions.<br>Leak Detection and Repair program is implemented to control HC/VOC emissions</td></tr>
<tr><td>17</td><td>The flare area shall have H2S and HC detectors with fire alarm system at fire station/control room. Flare gas recovery system shall be installed. All process units shall have knockout drums in every battery area. The safety release system of light hydrocarbons which are open atmosphere shall be connected to flare system.</td><td>Complied with.</td></tr>
<tr><td>18</td><td>The industry shall take necessary measures to prevent fire hazardous containing oil spill and soil recommendation as needed. The overhead flaring stack with knockout drums shall be installed to minimize gaseous emission during flaring.</td><td>Complied with.</td></tr>
<tr><td>19</td><td>Industry management shall operate & maintain OCEMS & CAAQMS stations and install PTZ cameras at suitable locations so as to monitor stack emissions and ambient air quality in the industry area and its vicinity and shall provide its suitable unhindered connectivity with Environment Surveillance Centre of the MPPCB and transmit the data regularly.</td><td>Complied with.</td></tr>
<tr><td></td><td>GENERAL CONDITIONS:</td><td></td></tr>
<tr><td>1.</td><td>The non-hazardous solid waste arresting in the industry/unit/unit premises sweeping, etc. be disposed-off scientifically so as not to cause any nuisance/pollution. The applicant shall take necessary permission from civic authorities for disposal to dumping site. If required.<br>Non Hazardous Solid wastes: -
<table>
<tr><th>Type of waste</th><th>Quantity</th><th>Disopsal</th></tr>
<tr><td>Scrap/ Plastic packing material wood, card board, gunny bags etc.</td><td></td><td>Sale to authorized party/As Per CPCB/ MoEF Guide lines / Others.</td></tr>
</table></td><td>Being complied.</td></tr>
<tr><td>2.</td><td>The applicant shall allow the staff of Madhya Pradesh Pollution Control Board and/or their authorized representative, upon the representation of credentials:<br>a. To inspect raw material stock, manufacturing processes, reactors, premises etc to perform the functions of the Board.<br>b. To enter upon the applicant’s premises where an effluent source is located or in which any records are required to be kept under the terms and conditions of this Consent.<br>c. To have access at reasonable times to any records required to be kept under the terms and conditions of this Consent.<br>d. To inspect at reasonable times any monitoring equipment or monitoring method required in this Consent: or,<br>e. To sample at reasonable times any discharge or pollutants.</td><td>Noted.</td></tr>
<tr><td>3.</td><td>This consent is transferable in nature, in case of any change in ownership / management, the new owner/partner/directors/proprietor shall immediately apply for the consent with new requisite information.</td><td>Noted.</td></tr>
<tr><td>4.</td><td>The issuance of this Consent does not convey any property rights in either real or personal property or any exclusive privileges, nor does it authorise any invasion of personal rights, nor any infringement of Central, State or local laws or regulations.</td><td>Noted.</td></tr>
<tr><td>5.</td><td>Industry shall install separate electric metering arrangement for running of pollution control devices and this arrangement shall be made in such fashion that any non-functioning of pollution control devices shall immediately stop electric supply to the production and shall remain tripped till such time unless the pollution control device/ devices are made functional. The record of electricity consumption for running of pollution control equipment shall be maintained and submitted to the Board every month.</td><td>Being Complied.</td></tr>
</table>

| S.N. | CONSENT CONDITIONS | COMPLIANCE STATUS / REMARKS |
|---|---|---|
| 6. | This consent is granted in respect of Water pollution control Act 1974 or Air Pollution Control act, 1981 or Authorization under the provisions of Hazardous and other Waste (Management & Transboundary movement) Rules 2016 only and does not relate to any other Department/Agencies. License required from other Department/Agencies have to be obtained by the unit separately and have to comply separately as per there Act / Rules. | Noted. |
| 7. | Balance consent/authorization fee, if any shall be recoverable by the Board even at a later date. | Noted. |
| 8. | The applicant shall submit such information, forms and fees as required by the board not letter than 180 day prior to the date of expiration of this consent/authorisation. | Noted. |
| 9. | The industry/unit shall establish a separate environmental cell, headed by senior officer of the unit for reporting the environmental compliances. The industry/ Unit shall submit environmental statement for the previous year ending 31st March on or before 30th September every year to the Board. | Being Complied. |
| 10. | Knowingly making any false statement for obtaining consent or compliance of consent conditions shall result in the imposition of criminal penalties as provided under the section 42(g) of the Water Act or section 38 (g) of the Air Act. | Noted. |
| 11. | After notice and opportunity for the hearing, this consent may be modified, suspended or revoked by the Board in whole or in part during its term for cause including, but not limited to, the following:<br>(a) Violation of any terms and conditions of this Consent.<br>(b) Obtaining this Consent by misrepresentation of failure to disclose fully all relevant facts.<br>(c) A change in any condition that requires temporary or permanent reduction or elimination of the authorized discharge. | Noted. |
| | ***Additional Condition:-*** | |
| 12. | On violation of any of the above-mentioned conditions the consent granted will automatically be taken as cancelled and necessary action will be initiated against the industry. | Noted. |
| 13. | The Gypsum laden line ash generated from Captive Power Plant shall be stored in eco-friendly manner within refinery premises and to be utilized for manufacture of eco- friendly bricks and other construction materials. The industry shall submit complete technical details in this regard to the board. | Being complied |
| 14. | The non-hazardous solid waste specially fly ash shall be collected in dry form and its 100% utilization shall be ensured as per the provisions of the Fly Ash Notification, 1999 as amended. | Being complied |
| 15. | Industry shall dispose of all the previously stored fly ash by December 2022. | Complied |
| 16. | Industry management shall operate & maintain CAAQMS and PTZ camera installed in the effluent treatment system area so as to monitor treated effluent quality in the industry area and its vicinity and shall provide its suitable unhindered connectivity with Environment Surveillance Centre of the MPPCB and transmit the data regularly. | Complied with |
| 17. | Oily sludge shall be disposed-off through Bio-remediation and annual generation and disposal data shall be submitted to the board. | Being complied |
| 18. | Industry shall comply all condition of Environment clearance issued by Ministry of Environment, Forest & Climate Change Govt. of India vide letter no. J-11011/2013-IA-II (I) Dated 28/11/2014 and subsequent amendments. | Noted |
| | Consent/authorization as required under the Water (Prevention & Control of Pollution) Act, 1974 and The Air (Prevention & Control of Pollution) Act,1981 is granted to your industry subject to fulfilment of all the conditions mentioned above. For renewal purpose you shall have to make an application to this Board through XGN at least Six months before the date of expiry of this consent. The applicant without valid consent (for operation) of the Board shall not bring in to use any outlet for the discharge of effluent and gaseous emission. | Noted |

# THE COMPLIANCE STATUS OF THE COMPREHENSIVE EIA RECOMMENDATIONS EIA CARRIED OUT BY NEERI, NAGPUR (NOVEMBER - 1994).

| S. No. | EIA Recommendation | Compliance Status / Remarks (As on 01/12/2023) |
|---|---|---|
| | **Air Environment** | |
| 1 | High Efficiency vertical furnaces to be provided. | Complied with |
| 2 | $SO_2$ emission from CPP to be minimized | Complied with |
| 3 | Tall Stacks to be provided for better dispersion of air pollutants | Complied with |
| 4 | Cone roof tank, Internal floating roof tank and nitrogen blanketing tank, mechanical seals in pumps, VOC collection system at ETP, etc. to be provided to reduce fugitive emission. | Complied with.<br>All floating roof tanks along with crude oil tanks are provided with primary and secondary seal. Fixed roof tanks provided with $N_2$ blanketing. Double mech. Seals provided in pumps for lighter HC. VOC collection system is provided in ETP. |
| 5 | Low sulphur fuel to be used and combustion units to be maintain for optimum efficiency | Complied with |
| 6 | Off gases from process unit to be treated in amine absorber. Rich Amine to be regenerated in ARU for $H_2S$ removal. | Complied with |
| 7 | AAQM should be monitored at least three sampling stations | Complied with.<br>Continuous AAQM Stations are provided at four locations. Out of which one has been shifted to MPPCB-Sagar as per the requirement of the Board |
| 8 | Continuous flue gas monitoring should be installed at all major stacks. | Complied with.<br>Continuous emission monitoring system (CEMS) is provided in all furnace & boiler stacks in the refinery. |
| 9 | Manual Stack monitoring facilities to be provided in all stacks | Complied with. |
| 10 | Furnaces and Boilers should Operate with minimum excess air to reduce NOx emission | Complied with.<br>High efficiency furnaces and Boilers are also provided with low NOx burners. |
| 11 | A weather station to be provided and operated with in Refinery premises to record various parameters like Wind Speed, direction, temperature, relative humidity, rain fall etc. | Complied with. |
| 12 | Green belt area in and around refinery for attenuation of fugitive emissions. | Complied with. |
| | **Noise Environment** | |
| 1 | Acoustic noise control valves to be provided | Complied with |
| 2 | Acoustic insulation on piping, pumps and turbine casings to be provided | Complied with |
| 3 | Acoustically lined burner plenum | Complied with |
| 4 | Sound proofing of critical operating stations to be done | Complied with |
| 5 | Use of PPEs like Ear muffs and ear plugs should be strictly enforced | Complied with |
| 6 | Noise level monitoring should be done regularly in plant areas and Ambient noise monitoring to be carried out regularly both inside refinery are as well as outside the greenbelt. | Complying with<br>Being carried out inside refinery and outside the greenbelt. |
| 7 | Plantation of greenbelt in and around refinery to be done to reduce noise level effectively. | Complied with. |
| **S.** | **EIA Recommendation** | **Compliance Status / Remarks** |

| No. | | (As on 01/06/2023 |
|---|---|---|
| | **Water Environment** | |
| 1 | Treatment and disposal facilities for liquid effluent should be completed prior to commissioning of the refinery process units | Complied with |
| 2 | Effluent treatment facilities to be provided for various oily/chemical streams to meet the MINAS | Complied with. An ETP with appropriate configuration & capacity is provided. |
| 3 | Facilities should be provided to treat the township sewage to meet the prescribed norms | Complied with. STP of suitable capacity provided in township. |
| 4 | Performance evaluation of ETP should be undertaken at regular intervals to control effluent quality as per MINAS | Complied with |
| 5 | Trained Manpower should be engaged for operation of ETP | Complied with |
| 6 | Vigorous in plant control measures should be initiated to reduce the concentration of pollutants and generation of waste water streams | Complied with. |
| 7 | Good operation and maintenance of ETP should be practiced for best results. | Complied with. |
| 8 | All Critical parameters i.e. pH, Oil, Phenol, sulphide and BOD should be tested | Complied with |
| 9 | Guard pond/ polishing pond for storing effluent stream should be provided | Complied with |
| | **Land Environment** | |
| 1 | Minimize generation of oil sludge at sources. | |
| a) | Installation and regular operation of effective mixing facility particularly in crude oil tanks for reduction of sludge formation | Complied with |
| b) | Suitable in-situ oil recovery process to be provided for cleaning of crude tanks | Shall be complied |
| c) | Regular skimming of oil from API separators to minimize formation of sludge | Complied with. |
| 2 | Treatment of Oily sludge for oil recovery | |
| a) | Suitable designed melting pits should be used for oil recovery from oily sludge generated in the refinery. The left over sediments should contain minimum oil. | Complied with.<br>For maximum recovery of hydrocarbons, ETP Oily sludge is recycled to the Delayed Coker Unit. Alternatively, Bio-remediation facility has been provided for conversion of residual oil from the oily sludge generated from ETP. BORL (CURRENTLY BPCL BINA REFINERY) has also tied-up with TSDF, Indore for incineration of ETP sludge. |
| 3 | Storage and handling of oily sludge | |
| a) | BORL refinery should provide mechanical sludge handling equipment like vacuum truck | Complied with. |
| 4 | Disposal of left over sediments | |
| a) | The sludge should be disposed off through landfill | Being complied.<br>Tied-up TSDF, Indore for disposal of sludge |
| b) | BORL refinery should also examine the possibility of disposal of treated sludge through land farming in greenbelt and ecological park area. | Complied with. |
| c) | The chemical sludge generated from ETP should be treated and disposed off to secured landfill. | Being complied.<br>Tied-up TSDF, Indore for disposal of sludge |
| d) | The dried biological sludge generated from the ETP should be disposed off as manure in greenbelt / ecological park area | Complied with. |

# COMPLIANCE STATUS OF RAPID RISK ANALYSIS RECOMMENDATIONS FOR REFINERY EXPANSION

| S. No. | Scenario | Recommendations | Compliance Status (As on 01/12/2023) |
|---|---|---|---|
| 1 | CDU/VDU/ NSU | 1) Operator cabin to be blast resistant and positively pressurized or relocate to a safe distance from the process unit. | Complied |
| | | 2) To perform periodic Inspection and maintenance of Naphtha Stabilizer Reflux Drum Vessel as it may rupture due to corrosion related or because of leak or external fire impingement. | Complied |
| | | 3) Considering the quantum of Class A products being handled in the reflux drum, flammable gas detectors along with water spray on the vessels should be considered. | Complied |
| | | 4) Hydrocarbon detectors shall be located adjacent to pumps handling light hydrocarbons and fuel gas KOD for early detection of leak. | Complied |
| 2 | DCU | 1) Install flammable gas detectors adjacent to debutanizer bottom pumps, debutanizer reflux pumps and wet gas compressor. | Complied |
| | | 2) Operator cabin to be blast resistant and positively pressurized or relocate to a safe distance from the process unit. | Complied |
| 3 | HGU | 1) For early detection of leak, hydrogen gas detectors shall be located at strategic locations. | Complied |
| | | 2) Catastrophic rupture and leakages in vessels may be avoided by adopting best practices in inspection and maintenance practices. | Complied |
| 4 | NHT/CCR/ISOM | Operator cabin to be blast resistant and positively pressurized or relocate to a safe distance from process unit. | Complied |
| 5 | SULPHUR BLOCK (New) | 1) Air intake points of SRR-3 are to be provided with toxic/flammable gas detectors. | Complied |
| | | 2) H2S detectors shall be located at possible leak sources, sampling point and drain locations within SRU Block. | Complied |
| | | 3) Operators and personnel visiting the SRU block shall always carry portable toxic gas detectors to warn of possible presence of toxic gases. | Complied |
| | | 4) Breathing apparatus should be available in field at or near the escape routes for usage in time of leak detection by personnel visiting site. | Complied |
| | | 5) Wind Sock shall be located at strategic locations around SRU block so as to show the direction of wind. | Complied |
| 6 | BORL OFFSITE | The best practices from industry and as per MB Lal recommendations should be considered in design. | Complied |

| S. No. | Scenario | Recommendations | Compliance Status (As on 30/11/2022) |
|---|---|---|---|
| 7 | BINA DISPATCH TERMINAL | | |
| | | 1) Emergency shutdown button shall be located at more than 2 points considering the length of rail gantry to stop loading operation immediately in case of a leak. | Complied |
| | | 2) It shall be ensured that the shutdown valves present upstream of loading arm closes in case of an emergency. | Complied |
| | | 3) It shall be ensured that remote actuated shut off valve is provided for the loading headers in the gantry for isolation to minimize leak in case of emergency. | Complied |
| | | 4) Ensure that the valves are located at a minimum distance of 15 meters from the gantry or valve should be made fire proof | Complied |
| | | 5) Ensure water sprinkler system is provided in the gantry | Complied |
| | | 6) Employees and operators must be well trained and must be aware of the hazard involved in the loading operation. | Complied |
| | | 7) The critical operating steps shall be displayed on the board near the location where applicable. | Complied |
| | | 8) Loading operations shall be immediately suspended in the event of leak, a fire in the vicinity, lightning and thunder storm. | Complied |
| | | 9) Clearly marked escape routes shall be provided in the gantry. | Complied |

# STATUS OF COMPLIANCE - CREP

(CHARTER ON CORPORATE RESPONSIBILITY FOR ENVIRONMENTAL PROTECTION)

| S. No | Conditions | Compliance Status / Remarks |
|---|---|---|
| 9.0 | **OIL REFINERIES** | **(As on 01/12/2023)** |
| **Air Pollution Management** | | |
| 1 | All the refineries located in the critically pollution areas, identified by CPCB, will submit an action plan (within six months) for phase wise reduction of $SO_2$ emission from the present level. | Not Applicable |
| 2 | Future refineries will have Sulphur Recovery Unit (SRU) with minimum 99% efficiency. | Complied with.<br>SRU has been provided with > 99.9% efficiency. |
| 3 | To enhance the efficiency of SRUs in the existing refineries, an expert committee will be constituted to look into various aspects and suggest a road map within six months. | Not Applicable |
| 4 | With regard to NOx emission, the new refineries/process units will install low NOx burners. For retrofitting of low NOx burners in existing units, the expert committees will suggest the strategies and action plan within six months including NOx standard. | Complied with.<br>Low NOx burners are provided in all heaters / boilers. |
| 5 | The flare losses will be minimized and monitored regularly. | Being complied.<br>Flare losses are continuously monitored & minimized. |
| 6 | Refineries will install continuous emission monitoring systems for SOx and NOx in major stacks with proper calibration facilities. Action plan for this will be submitted within six months. | Complied with.<br>The stacks have been provided with continuous monitoring equipment. |
| 7 | Refineries will also monitor total HC and Benzene in the premises (particularly at loading/unloading operations and ETP). The status and action plan will be submitted within six months. The expert committee will also suggest an action plan, within six months, for contract and monitoring of hydrocarbon loss & VOC emissions. Leak detection and repair (LDAR) program and vapour recovery systems (for loading & unloading operations within refineries only). | Complying with.<br>Leak Detection and Repair (LDAR) Program is implemented. |
| **Wastewater Management** | | |
| 1 | Refineries will prepare action plan for conservation of water resources and maximized reuse recycling treated effluent within six months. The treated effluent discharge quantity (excluding once through cooling water) will be limited to 0.4 $m^3$/per tonne(for 90% of time) except for the monsoon season. | Being complied.<br>Reuse/recycle of water is maximized. The effluents are recycled to RODM to maximum possible extent. |
| 2 | Oil spill response facilities at coastal refineries will be in position within two years. To facilitate this MoEF will coordinate with Coast Guards, Port Trust and departments. | Not Applicable. |
| **Solid Waste Management** | | |
| 1 | Refineries will explore new technologies for reduction in the generations of oily sludge Strategy and action plan for liquidation of existing sludge will be submitted within six months. | Complied with.<br>Provisions to reduce/recycle sludge are incorporated in refinery design. |
| 2 | The petroleum coke having high sulphur content will be sold to/reused by organized industries (having consent from SPCBs), which have systems to control $SO_2$ emissions. This will be ensured by June 2003. | Being complied. |

# STATUS OF 3RD TASK FORCE MEETING RECOMMENDATIONS

## BHARAT OMAN REFINERIES LIMITED, BINA, M.P.

| S. No | Recommendations | Action Plan |
|---|---|---|
| 1. | Possibilities of co-processing of oily sludge in Cement Kilns & Power Plants should be explored and time targets specified for the same. | BORL(Currently BPCL- Bina Refinery) has installed necessary facility for reprocessing ETP Oily sludge in Delayed Coker Unit (DCU). This facility has been put into operation and presently there is no sludge generation from the refinery. Also we are exploring the possibilities of co processing of oily sludge in cement kilns. |
| 2. | Details of major shutdowns taken during last 05 years with task carried out during these periods for compliance of CREP recommendations and implementation of new standards. | BORL(Currently BPCL- Bina Refinery) has installed necessary facilities under CREP & new standards as part of original refinery design. |
| 3. | Compile data on particulate matter emitted, wherein the dual fuel (fuel gas and fuel oil) issued, to assess the factor effecting achievability of emission norms. | Refinery is complying with the standards for particulate matter emission from all the furnaces. |
| 4. | To sell pet coke only to those units having valid consent under Air Act and equipped with proper air pollution control devices. | Being complied. |
| 5. | Report on Risks involved in covering effluent treatment facilities with VOC removal system and measures proposed for fool proof safety system will be prepared by HPCL Refinery. | Noted. |
| 6. | Upload the environmental status details envisaging effluent characteristics, source emission data, ambient air quality and solid/hazardous waste generated, stored & disposed on the websites for public information. | The web page has been developed and is available on website for public information. |
| 7. | Brief note on report of LDAR to assess the total losses along with steps taken to reduce the losses will be submitted by all units. | BORL(Currently BPCL- Bina Refinery) has implemented LDAR program to monitor losses due to VOC & Benzene leakages. Any leakage detected is immediately attended. Net savings due to the program during June 2023 – Nov 2023 period is calculated as 0.367 kg/day. |
| 8. | All the refineries will provide the real time data on ambient air and source emissions to CPCB. The units will monitor all the notified parameters for compliance verification. | Connecting Ambient Air Stations & Source emissions with CPCB is done. The notified parameters are closely monitored for compliance verification. |
| 9. | The refineries will strengthen the infrastructure facilities for monitoring of all the parameters as per notified standards with respect to effluent, ambient air quality and emissions. | BORL(Currently BPCL- Bina Refinery) has taken necessary action for procurement of various equipment to strengthen the monitoring infrastructure. |
| 10. | The refineries will submit a detailed report on the adequacy of process and effluent treatment facilities. | Being a new refinery, effluent treatment facility at BORL(Currently BPCL- Bina Refinery) is designed to meet the requirements of new specifications. |
| 11. | The units should submit the details on management of oily sludge, tank bottom sludge management. The new tankers, whenever inducted into service be provided with bottom loading facilities. | Oily sludge, tank bottom sludge generated is presently recycled to Delayed Coker Unit (DCU). In addition BORL(Currently BPCL- Bina Refinery) has tied up with TSDF, Indore for disposal of excess |

| S. No | Recommendations | Action Plan |
|---|---|---|
| | | sludge, if any. |

# ACTION PLAN FOR POINT-WISE COMPLIANCE OF CREP

(Letter No: 4110/MPPCB/2013, dt: 01/06/2013)

| S. No | Recommendations | Action Plan |
|---|---|---|
| 1. | All refineries shall provide connectivity of stack to CPCB and SPCB by May 31, 2013 and in case of any problems or hurdles, this will be informed to SPCB/CPCB with reasons. | Connectivity of Ambient Stations & Stacks with CPCB and MPPCB is completed. |
| 2. | The refineries shall assess the technical feasibility with cost economics for implementation bottom loading of all products in trucks & railways for emission reduction so that further action required can be taken. | Bottom loading facility is available in LPG loading system. |
| 3. | All refineries shall report to CPCB of any accident or pipe leakages occurring within 24 hours along with action taken or proposed. | We have noted this condition. |
| 4. | The refineries shall forward notes on success accomplished by them in environmental activities during 2005-2013. | Complied. |
| 5. | All refineries shall submit note on storage arrangements made for oily sludge including details of stored oily sludge, proposed for bio-remediation with time bound programme and status of disposal of bio-remediated soil | Oily sludge generated from ETP is presently recycled to Delayed Coker Unit (DCU). |
| 6. | Refineries to compile data on particulate matter emitted, where in, the dual fuel (fuel gas & fuel oil) is used, to assess the factors effecting achieving the emission norms. | The particulate matter emissions of BORL (Currently BPCL- Bina Refinery) are within the applicable standards. Regular data of stack monitoring reports are sent to the MoEF as part of six monthly compliance. |
| 7. | The comments on proposed guidelines for bio-remediation be forwarded for consideration before finalizing. | Comments if any shall be provided |
| 8. | All refineries shall submit action plan to achieve zero discharge and to cover their ETP with VOC adsorption system. | The following measures are taken to achieve the zero discharge.<br>1. Maximum utilization of ETP treated water in RODM plant.<br>2. Treated water is used for Greenbelt development/ horticulture.<br>The VOC adsorption system in ETP is already implemented. |
| 9. | Refineries to submit time bound action plan to install state of the art systems like SCADA(for monitoring the health of pipeline) in all their crude and product pipelines and a time bound programme for replacing the old pipeline. | Complied |

# ACTION PLAN FOR POINT-WISE COMPLIANCE OF CREP

(Letter No: 9339/TS/MPPCB/2011, Dt: 28/11/2011)

| S. No | Recommendations | Action Plan |
|---|---|---|
| 1. | Possibilities of co-processing of oily sludge in Cement Kilns & Power Plants should be explored and time targets specified for the same. | Oily sludge generated from ETP is presently recycled to Delayed Coker Unit (DCU).<br>We are also currently exploring the possibilities for co-processing of oily sludge in cement kilns. |
| 2. | Details of major shutdowns taken during last 05 years with task carried out during these periods for compliance of CREP recommendations and implementation of new standards. | Requirements under CREP and new environmental standards have already been incorporated in Refinery design. |
| 3. | Compile data on particulate matter emitted, wherein the duel fuel (fuel gas and fuel oil) issued, to assess the factor effecting achievability of emission norms. | Refinery is complying with the standard for particulate matter emission from all the furnaces. |
| 4. | To sell pet coke only to those units having valid consent under Air Act and equipped with proper air pollution control devices. | Being complied. |
| 5. | Report on Risks involved in covering effluent treatment facilities with VOC removal system and measures proposed for fool proof safety system will be prepared by HPCL Refinery. | Noted. |
| 6. | Upload the environmental status details envisaging effluent characteristics, source emission data, ambient air quality and solid/hazardous waste generated, stored & disposed on the websites for public information. | The web page has been developed and is available on website for public information. |
| 7. | Brief note on report of LDAR to assess the total losses along with steps taken to reduce the losses will be submitted by all units. | LDAR program has been implemented to monitor and control the losses. |
| 8. | All the refineries will provide the real time data on ambient air and source emissions to CPCB. The units will monitor all the notified parameters for compliance verification. | Connecting Ambient Stations & Source emissions with CPCB is completed. The notified parameters are closely monitored for compliance verification. |
| 9. | The refineries will strengthen the infrastructure facilities for monitoring of all the parameters as per notified standards with respect to effluent, ambient air quality and emissions. | For monitoring AAQ, effluent & emissions the monitoring equipment are procured. Necessary activities for strengthening infrastructure for monitoring are completed. |
| 10. | The refineries will submit a detailed report on the adequacy of process and effluent treatment facilities. | Being a new refinery, effluent treatment facility at Bina Refinery is designed to meet the requirements of new specifications. |
| 11. | The units should submit the details on management of oily sludge, tank bottom sludge management. The new tankers, whenever inducted into service be provided with bottom loading facilities. | Presently oily sludge is being recycled to DCU. In addition, industry has tied up with TSDF, Indore for disposal in case of any future requirements. |

## LABORATORY TEST REPORT - AMBIENT AIR MONITORING

**REPORT NO.: OCT23/016/31 (ULR- TC709923000021289F)**

### SAMPLE DETAILS

| | | | | |
|---|---|---|---|---|
| 1. | Name & Address of Client: Bharat Petroleum Corporation Ltd.<br>Bina Refinery, Village: Agasod, Bina - 470124, Dist: Sagar, Madhya Pradesh, India. | | | |
| 2. | Sample ID: 2148088246 – 016OC23AQ02 | | 3. | Client Representative: Mr. Anil Medhe |
| 4. | Sampling Date: 04.10.2023 | | 5. | Sampling Location: Near Flare Stack (South of Refinery) |
| 6. | Sampling time: 11:50 hr | | 7. | Sampling Duration: 24 Hrs |
| 8. | Analysis commenced on: 16.10.2023 | | 9. | Analysis Completed on: 16.10.2023 |
| 10. | Reporting Date: 01.11.2023 | | 11. | Discipline: Chemical |
| 12. | Sample Collected By: Mr. Jitendra Sinha | | 13. | Group: Atmospheric Pollution |
| 14. | Sampling Procedure: IS: 5182 Method | | 15. | Product: Ambient Air |
| 16. | Description of Sample: | Sampling Bottles: Sealed √ | Filter Paper: Packed √ | Bladder: Clamped √ |
| 17. | **Environment Condition:** | Temp: Normal / Humidity: Medium | Wind speed: Smooth | Cloud cover: Mainly Clear |
| | Rain: No Rain | Wind Direction: Cross wind | Wind blowing from: W | Station category: Industrial |
| 18. | Sample Received Date: 16.10.2023 | | | |

### TEST RESULTS

| S.No | Parameters | Unit (SI) | | Results | Specification/ SPCB Norms | Method Used |
|---|---|---|---|---|---|---|
| 1. | $PM_{10}$ | µg /m³ | : | 52 | 100 | IS 5182 (Part 23) : 2006 |
| 2. | $PM_{2.5}$ | µg /m³ | : | 25 | 60 | Guidelines By CPCB(Vol-1) |
| 3. | Sulphur Dioxide ($SO_2$) | µg /m³ | : | 10.83 | 80 | IS 5182 (Part 2 ) :2001 |
| 4. | Nitrogen Oxide ($NO_x$) | µg /m³ | : | 18.48 | 80 | IS 5182 (Part 6 ) :2006 |
| 5. | Ammonia($NH_3$) | µg /m³ | : | N.D. | 400 | NAAQMS Manual by CPCB |
| 6. | Lead (pb) | µg /m³ | : | N.D. | 0.5 | USEPA(2000)-Method 29 |
| 7. | Arsenic | ng/m³ | : | <5 | 06 | USEPA(2000)-Method 29 |
| 8. | Ozone | µg /m³ | : | <1 | 100 | IS 5182(Part 9): 1974 |
| 9. | Nickel | ng/m³ | : | <1 | 20 | USEPA(2000)-Method 29 |
| 10. | Benzene | µg /m³ | : | <3 | 05 | IS 5182(Part 11): 2006 |

**Remark : N.D. - Not Detected.**

**Authorized By -**

**Name : Bhavisha Pandya** | **Designation : Sr.Chemist**

NOTE:
1) Reports may be reproduced, if required, but only in full and only with written approval of the laboratory.
2) Re analysis of sample will be done, if requested within 7 days from the date of Reporting of sample if the samples are not consumed during analysis.
3) The results reported above relate to the sample identified under Sample Details.

----------END OF REPORT----------

# KADAM ENVIRONMENTAL CONSULTANTS

An ISO 9001-2015 Certified Company (MoEF Approved)

871/B/3, Near Himalaya Machinery, GIDC Makarpura, Vadodara-10.
Phone : (O) 0265 - 6131000, 6131001


## ENVIRONMENTAL MONITORING REPORT

### LABORATORY TEST REPORT - AMBIENT AIR MONITORING

**REPORT NO.: OCT23/016/35**

### SAMPLE DETAILS

| | | | | |
|---|---|---|---|---|
| 1. | Name & Address of Client: Bharat Petroleum Corporation Ltd.<br>Bina Refinery, Village: Agasod, Bina - 470124, Dist: Sagar, Madhya Pradesh, India. | | | |
| 2. | Sample ID: 2148088246 – 016OC23AQ02 | | 3. | Client Representative: Mr. Anil Medhe |
| 4. | Sampling Date: 04.10.2023 | | 5. | Sampling Location: Near Flare Stack (South of Refinery) |
| 6. | Sampling time: 11:50 hr | | 7. | Sampling Duration: 24 Hrs |
| 8. | Analysis commenced on: 16.10.2023 | | 9. | Analysis Completed on: 16.10.2023 |
| 10. | Reporting Date: 01.11.2023 | | 11. | Discipline: Chemical |
| 12. | Sample Collected By: Mr. Jitendra Sinha | | 13. | Group: Atmospheric Pollution |
| 14. | Sampling Procedure: IS: 5182 Method | | 15. | Product: Ambient Air |
| 16. | Description of Sample: | Sampling Bottles: Sealed √ | Filter Paper: Packed √ | Bladder: Clamped √ |
| 17. | **Environment Condition:** | Temp: Normal / Humidity: Medium | Wind speed: Smooth | Cloud cover: Mainly Clear |
| | Rain: No Rain | Wind Direction: Cross wind | Wind blowing from: W | Station category: Industrial |
| 18. | Sample Received Date: 16.10.2023 | | | |

### TEST RESULTS

| S.No | Parameters | Unit (SI) | | Results | Specification/ SPCB Norms | Method Used |
|---|---|---|---|---|---|---|
| 1. | CO | $mg/m^3$ | : | 0.652 | 02 | Gas Chromatography |
| 2. | Benzo (a) Pyrene | $ng/m^3$ | : | <0.5 | 01 | IS 5182 (Part 12): 2004 |

**Remark :**

**Authorized By -**

**Name : Bhavisha Pandya** | **Designation : Sr.Chemist**

NOTE:
1) Reports may be reproduced, if required, but only in full and only with written approval of the laboratory.
2) Re analysis of sample will be done, if requested within 7 days from the date of Reporting of sample if the samples are not consumed during analysis.
3) The results reported above relate to the sample identified under Sample Details.

----------END OF REPORT----------

## LABORATORY TEST REPORT - AMBIENT AIR MONITORING

**REPORT NO.: OCT23/016/30 (ULR- TC709923000021288F)**

### SAMPLE DETAILS

| | | | | |
|---|---|---|---|---|
| 1. | Name & Address of Client: Bharat Petroleum Corporation Ltd.<br>Bina Refinery, Village: Agasod, Bina - 470124, Dist: Sagar, Madhya Pradesh, India. | | | |
| 2. | Sample ID: 2148088246 – 016OC23AQ01 | | 3. | Client Representative: Mr. Anil Medhe |
| 4. | Sampling Date: 03.10.2023 | | 5. | Sampling Location: Near Canteen (West of Refinery) |
| 6. | Sampling time: 11:40 hr | | 7. | Sampling Duration: 24 Hrs |
| 8. | Analysis commenced on: 16.10.2023 | | 9. | Analysis Completed on: 16.10.2023 |
| 10. | Reporting Date: 01.11.2023 | | 11. | Discipline: Chemical |
| 12. | Sample Collected By: Mr. Jitendra Sinha | | 13. | Group: Atmospheric Pollution |
| 14. | Sampling Procedure: IS: 5182 Method | | 15. | Product: Ambient Air |
| 16. | Description of Sample: | Sampling Bottles: Sealed √ | Filter Paper: Packed √ | Bladder: Clamped √ |
| 17. | **Environment Condition:** | Temp: Normal / Humidity: Medium | Wind speed: Smooth | Cloud cover: Clear sky |
| | Rain: No Rain | Wind Direction: Up wind | Wind blowing from: W | Station category: Industrial |
| 18. | Sample Received Date: 16.10.2023 | | | |

### TEST RESULTS

| S.No | Parameters | Unit (SI) | | Results | Specification/ SPCB Norms | Method Used |
|---|---|---|---|---|---|---|
| 1. | $PM_{10}$ | µg /m³ | : | 57 | 100 | IS 5182 (Part 23) : 2006 |
| 2. | $PM_{2.5}$ | µg /m³ | : | 27 | 60 | Guidelines By CPCB(Vol-1) |
| 3. | Sulphur Dioxide ($SO_2$) | µg /m³ | : | 8.27 | 80 | IS 5182 (Part 2 ) :2001 |
| 4. | Nitrogen Oxide ($NO_x$) | µg /m³ | : | 15.37 | 80 | IS 5182 (Part 6 ) :2006 |
| 5. | Ammonia($NH_3$) | µg /m³ | : | N.D. | 400 | NAAQMS Manual by CPCB |
| 6. | Lead (pb) | µg /m³ | : | N.D. | 0.5 | USEPA(2000)-Method 29 |
| 7. | Arsenic | ng/m³ | : | <5 | 06 | USEPA(2000)-Method 29 |
| 8. | Ozone | µg /m³ | : | <1 | 100 | IS 5182(Part 9): 1974 |
| 9. | Nickel | ng/m³ | : | <1 | 20 | USEPA(2000)-Method 29 |
| 10. | Benzene | µg /m³ | : | <3 | 05 | IS 5182(Part 11): 2006 |

**Remark : N.D. - Not Detected.**

**Authorized By -**

**Name : Bhavisha Pandya** | **Designation : Sr.Chemist**

NOTE:
1) Reports may be reproduced, if required, but only in full and only with written approval of the laboratory.
2) Re analysis of sample will be done, if requested within 7 days from the date of Reporting of sample if the samples are not consumed during analysis.
3) The results reported above relate to the sample identified under Sample Details.

----------**END OF REPORT**----------

# KADAM ENVIRONMENTAL CONSULTANTS

An ISO 9001-2015 Certified Company (MoEF Approved)

871/B/3, Near Himalaya Machinery, GIDC Makarpura, Vadodara-10.
Phone : (O) 0265 - 6131000, 6131001


## ENVIRONMENTAL MONITORING REPORT

### LABORATORY TEST REPORT - AMBIENT AIR MONITORING

**REPORT NO.: OCT23/016/34**

**SAMPLE DETAILS**

| | | | | |
|---|---|---|---|---|
| 1. | Name & Address of Client: Bharat Petroleum Corporation Ltd.<br>Bina Refinery, Village: Agasod, Bina - 470124, Dist: Sagar, Madhya Pradesh, India. | | | |
| 2. | Sample ID: 2148088246 – 016OC23AQ01 | | 3. | Client Representative: Mr. Anil Medhe |
| 4. | Sampling Date: 03.10.2023 | | 5. | Sampling Location: Near Canteen (West of Refinery) |
| 6. | Sampling time: 11:30 hr | | 7. | Sampling Duration: 24 Hrs |
| 8. | Analysis commenced on: 16.10.2023 | | 9. | Analysis Completed on: 16.10.2023 |
| 10. | Reporting Date: 01.11.2023 | | 11. | Discipline: Chemical |
| 12. | Sample Collected By: Mr. Jitendra Sinha | | 13. | Group: Atmospheric Pollution |
| 14. | Sampling Procedure: IS: 5182 Method | | 15. | Product: Ambient Air |
| 16. | Description of Sample: | Sampling Bottles: Sealed √ | Filter Paper: Packed √ | Bladder: Clamped √ |
| 17. | **Environment Condition:** | Temp: Normal / Humidity: Medium | Wind speed: Smooth | Cloud cover: Clear sky |
| | Rain: No Rain | Wind Direction: Up wind | Wind blowing from: W | Station category: Industrial |
| 18. | Sample Received Date: 16.10.2023 | | | |

**TEST RESULTS**

| S.No | Parameters | Unit (SI) | | Results | Specification/ SPCB Norms | Method Used |
|---|---|---|---|---|---|---|
| 1. | CO | mg/m³ | : | 0.790 | 02 | Gas Chromatography |
| 2. | Benzo (a) Pyrene | ng/m³ | : | <0.5 | 01 | IS 5182 (Part 12): 2004 |

**Remark :**

**Authorized By -**

**Name : Bhavisha Pandya** | **Designation : Sr.Chemist**

NOTE:
1) Reports may be reproduced, if required, but only in full and only with written approval of the laboratory.
2) Re analysis of sample will be done, if requested within 7 days from the date of Reporting of sample if the samples are not consumed during analysis.
3) The results reported above relate to the sample identified under Sample Details.

----------END OF REPORT----------

## LABORATORY TEST REPORT - AMBIENT AIR MONITORING

REPORT NO.: OCT23/016/32 (ULR- TC709923000021290F)

### SAMPLE DETAILS

| | | | | |
|---|---|---|---|---|
| 1. | Name & Address of Client: Bharat Petroleum Corporation Ltd.<br>Bina Refinery, Village: Agasod, Bina - 470124, Dist: Sagar, Madhya Pradesh, India. | | | |
| 2. | Sample ID: 2148088246 – 016OC23AQ03 | | 3. | Client Representative: Mr. Anil Medhe |
| 4. | Sampling Date: 05.10.2023 | | 5. | Sampling Location: Near BDT (East of Refinery) |
| 6. | Sampling time: 12:30 hr | | 7. | Sampling Duration: 24 Hrs |
| 8. | Analysis commenced on: 16.10.2023 | | 9. | Analysis Completed on: 16.10.2023 |
| 10. | Reporting Date: 01.11.2023 | | 11. | Discipline: Chemical |
| 12. | Sample Collected By: Mr. Jitendra Sinha | | 13. | Group: Atmospheric Pollution |
| 14. | Sampling Procedure: IS: 5182 Method | | 15. | Product: Ambient Air |
| 16. | Description of Sample: | Sampling Bottles: Sealed √ | Filter Paper: Packed √ | Bladder: Clamped √ |
| 17. | **Environment Condition:** | Temp: Normal / Humidity: Medium | Wind speed: Smooth | Cloud cover: Mainly Clear |
| | Rain: No Rain | Wind Direction: Down wind | Wind blowing from: NW | Station category: Industrial |
| 18. | Sample Received Date: 16.10.2023 | | | |

### TEST RESULTS

| S.No | Parameters | Unit (SI) | | Results | Specification/ SPCB Norms | Method Used |
|---|---|---|---|---|---|---|
| 1. | $PM_{10}$ | µg /m³ | : | 60 | 100 | IS 5182 (Part 23) : 2006 |
| 2. | $PM_{2.5}$ | µg /m³ | : | 28 | 60 | Guidelines By CPCB(Vol-1) |
| 3. | Sulphur Dioxide ($SO_2$) | µg /m³ | : | 9.59 | 80 | IS 5182 (Part 2 ) :2001 |
| 4. | Nitrogen Oxide ($NO_x$) | µg /m³ | : | 16.33 | 80 | IS 5182 (Part 6 ) :2006 |
| 5. | Ammonia($NH_3$) | µg /m³ | : | N.D. | 400 | NAAQMS Manual by CPCB |
| 6. | Lead (pb) | µg /m³ | : | N.D. | 0.5 | USEPA(2000)-Method 29 |
| 7. | Arsenic | ng/m³ | : | <5 | 06 | USEPA(2000)-Method 29 |
| 8. | Ozone | µg /m³ | : | <1 | 100 | IS 5182(Part 9): 1974 |
| 9. | Nickel | ng/m³ | : | <1 | 20 | USEPA(2000)-Method 29 |
| 10. | Benzene | µg /m³ | : | <3 | 05 | IS 5182(Part 11): 2006 |

**Remark : N.D. - Not Detected.**

**Authorized By :**

**Name : Bhavisha Pandya** | **Designation : Sr.Chemist**

NOTE:
1) Reports may be reproduced, if required, but only in full and only with written approval of the laboratory.
2) Re analysis of sample will be done, if requested within 7 days from the date of Reporting of sample if the samples are not consumed during analysis.
3) The results reported above relate to the sample identified under Sample Details.

----------END OF REPORT----------

## LABORATORY TEST REPORT - AMBIENT AIR MONITORING

**REPORT NO.: OCT23/016/36**

### SAMPLE DETAILS

| | | | | |
|---|---|---|---|---|
| 1. | Name & Address of Client: Bharat Petroleum Corporation Ltd.<br>Bina Refinery, Village: Agasod, Bina - 470124, Dist: Sagar, Madhya Pradesh, India. | | | |
| 2. | Sample ID: 2148088246 – 016OC23AQ03 | | 3. | Client Representative: Mr. Anil Medhe |
| 4. | Sampling Date: 05.10.2023 | | 5. | Sampling Location: Near BDT (East of Refinery) |
| 6. | Sampling time: 12:30 hr | | 7. | Sampling Duration: 24 Hrs |
| 8. | Analysis commenced on: 16.10.2023 | | 9. | Analysis Completed on: 16.10.2023 |
| 10. | Reporting Date: 01.11.2023 | | 11. | Discipline: Chemical |
| 12. | Sample Collected By: Mr. Jitendra Sinha | | 13. | Group: Atmospheric Pollution |
| 14. | Sampling Procedure: IS: 5182 Method | | 15. | Product: Ambient Air |
| 16. | Description of Sample: | Sampling Bottles: Sealed √ | Filter Paper: Packed √ | Bladder: Clamped √ |
| 17. | **Environment Condition:** | Temp: Normal / Humidity: Medium | Wind speed: Smooth | Cloud cover: Mainly Clear |
| | Rain: No Rain | Wind Direction: Down wind | Wind blowing from: NW | Station category: Industrial |
| 18. | Sample Received Date: 16.10.2023 | | | |

### TEST RESULTS

| S.No | Parameters | Unit (SI) | | Results | Specification/ SPCB Norms | Method Used |
|---|---|---|---|---|---|---|
| 1. | CO | $mg/m^3$ | : | 0.721 | 02 | Gas Chromatography |
| 2. | Benzo (a) Pyrene | $ng/m^3$ | : | <0.5 | 01 | IS 5182 (Part 12): 2004 |

**Remark :**

**Authorized By -**

**Name : Bhavisha Pandya** | **Designation : Sr.Chemist**

NOTE:
1) Reports may be reproduced, if required, but only in full and only with written approval of the laboratory.
2) Re analysis of sample will be done, if requested within 7 days from the date of Reporting of sample if the samples are not consumed during analysis.
3) The results reported above relate to the sample identified under Sample Details.

----------**END OF REPORT**----------

## LABORATORY TEST REPORT - AMBIENT AIR MONITORING

**REPORT NO.: OCT23/016/33 (ULR- TC709923000021291F)**

### SAMPLE DETAILS

| | | | | |
|---|---|---|---|---|
| 1. | Name & Address of Client: Bharat Petroleum Corporation Ltd.<br>Bina Refinery, Village: Agasod, Bina - 470124, Dist: Sagar, Madhya Pradesh, India. | | | |
| 2. | Sample ID: 2148088246 – 016OC23AQ04 | | 3. | Client Representative: Mr. Anil Medhe |
| 4. | Sampling Date: 06.10.2023 | | 5. | Sampling Location: Near ETP (North of Refinery) |
| 6. | Sampling time: 14:00 hr | | 7. | Sampling Duration: 24 Hrs |
| 8. | Analysis commenced on: 16.10.2023 | | 9. | Analysis Completed on: 16.10.2023 |
| 10. | Reporting Date: 01.11.2023 | | 11. | Discipline: Chemical |
| 12. | Sample Collected By: Mr. Jitendra Sinha | | 13. | Group: Atmospheric Pollution |
| 14. | Sampling Procedure: IS: 5182 Method | | 15. | Product: Ambient Air |
| 16. | Description of Sample: | Sampling Bottles: Sealed √ | Filter Paper: Packed √ | Bladder: Clamped √ |
| 17. | **Environment Condition:** | Temp: Normal / Humidity: Medium | Wind speed: Smooth | Cloud cover: Mainly Clear |
| | Rain: No Rain | Wind Direction: Up wind | Wind blowing from: NW | Station category: Industrial |
| 18. | Sample Received Date: 16.10.2023 | | | |

### TEST RESULTS

| S.No | Parameters | Unit (SI) | | Results | Specification/ SPCB Norms | Method Used |
|---|---|---|---|---|---|---|
| 1. | $PM_{10}$ | µg /m³ | : | 63 | 100 | IS 5182 (Part 23) : 2006 |
| 2. | $PM_{2.5}$ | µg /m³ | : | 31 | 60 | Guidelines By CPCB(Vol-1) |
| 3. | Sulphur Dioxide ($SO_2$) | µg /m³ | : | 8.46 | 80 | IS 5182 (Part 2 ) :2001 |
| 4. | Nitrogen Oxide ($NO_x$) | µg /m³ | : | 19.80 | 80 | IS 5182 (Part 6 ) :2006 |
| 5. | Ammonia($NH_3$) | µg /m³ | : | N.D. | 400 | NAAQMS Manual by CPCB |
| 6. | Lead (pb) | µg /m³ | : | N.D. | 0.5 | USEPA(2000)-Method 29 |
| 7. | Arsenic | ng/m³ | : | <5 | 06 | USEPA(2000)-Method 29 |
| 8. | Ozone | µg /m³ | : | <1 | 100 | IS 5182(Part 9): 1974 |
| 9. | Nickel | ng/m³ | : | <1 | 20 | USEPA(2000)-Method 29 |
| 10. | Benzene | µg /m³ | : | <3 | 05 | IS 5182(Part 11): 2006 |

**Remark : N.D. - Not Detected.**

**Authorized By -**

**Name : Bhavisha Pandya** | **Designation : Sr.Chemist**

NOTE:
1) Reports may be reproduced, if required, but only in full and only with written approval of the laboratory.
2) Re analysis of sample will be done, if requested within 7 days from the date of Reporting of sample if the samples are not consumed during analysis.
3) The results reported above relate to the sample identified under Sample Details.

----------END OF REPORT----------

# KADAM ENVIRONMENTAL CONSULTANTS

An ISO 9001-2015 Certified Company (MoEF Approved)

871/B/3, Near Himalaya Machinery, GIDC Makarpura, Vadodara-10.
Phone : (O) 0265 - 6131000, 6131001


## ENVIRONMENTAL MONITORING REPORT

### LABORATORY TEST REPORT - AMBIENT AIR MONITORING

**REPORT NO.: OCT23/016/37**

**SAMPLE DETAILS**

| | | | | | |
|---|---|---|---|---|---|
| 1. | Name & Address of Client: Bharat Petroleum Corporation Ltd.<br>Bina Refinery, Village: Agasod, Bina - 470124, Dist: Sagar, Madhya Pradesh, India. | | | | |
| 2. | Sample ID: 2148088246 – 016OC23AQ04 | | 3. | Client Representative : Mr. Anil Medhe | |
| 4. | Sampling Date: 06.10.2023 | | 5. | Sampling Location: Near ETP (North of Refinery) | |
| 6. | Sampling time: 14:00 hr | | 7. | Sampling Duration: 24 Hrs | |
| 8. | Analysis commenced on: 16.10.2023 | | 9. | Analysis Completed on: 16.10.2023 | |
| 10. | Reporting Date: 01.11.2023 | | 11. | Discipline: Chemical | |
| 12. | Sample Collected By: Mr. Jitendra Sinha | | 13. | Group: Atmospheric Pollution | |
| 14. | Sampling Procedure: IS: 5182 Method | | 15. | Product: Ambient Air | |
| 16. | Description of Sample: | Sampling Bottles: Sealed √ | | Filter Paper: Packed √ | Bladder: Clamped √ |
| 17. | **Environment Condition:** | Temp: Normal | Humidity: Medium | Wind speed: Smooth | Cloud cover: Mainly Clear |
| | Rain: No Rain | Wind Direction: Up wind | | Wind blowing from: NW | Station category: Industrial |
| 18. | Sample Received Date: 16.10.2023 | | | | |

**TEST RESULTS**

| S.No | Parameters | Unit (SI) | | Results | Specification / SPCB Norms | Method Used |
|---|---|---|---|---|---|---|
| 1. | CO | $mg/m^3$ | : | 0.755 | 02 | Gas Chromatography |
| 2. | Benzo (a) Pyrene | $ng/m^3$ | : | <0.5 | 01 | IS 5182 (Part 12): 2004 |
| **Remark :** | | | | | | |
| **Authorized By -** | | | | | | |
| **Name : Bhavisha Pandya** | | | | **Designation : Sr.Chemist** | | |

NOTE:
1) Reports may be reproduced, if required, but only in full and only with written approval of the laboratory.
2) Re analysis of sample will be done, if requested within 7 days from the date of Reporting of sample if the samples are not consumed during analysis.
3) The results reported above relate to the sample identified under Sample Details.

----------END OF REPORT----------

## LABORATORY TEST REPORT - AMBIENT

**REPORT NO.: SEP23/031/36 (ULR- TC709923000019184F)**

### SAMPLE DETAILS

| | | | | |
|---|---|---|---|---|
| 1. | Name & Address of Client: Bharat Petroleum Corporation Ltd.<br>Bina Refinery, Village: Agasod, Bina - 470124, Dist: Sagar, Madhya Pradesh, India. | | | |
| 2. | Sample ID: 2148088246 – 031SE23AQ02 | | 3. | Client Representative: Mr. Anil Medhe |
| 4. | Sampling Date: 05.09.2023 | | 5. | Sampling Location: Near Flare Stack (South of Refinery) |
| 6. | Sampling time: 10:40 hr | | 7. | Sampling Duration: 24 Hrs |
| 8. | Analysis commenced on: 13.09.2023 | | 9. | Analysis Completed on: 15.09.2023 |
| 10. | Reporting Date: 26.09.2023 | | 11. | Discipline: Chemical |
| 12. | Sample Collected By: Mr. Jitendra Sinha | | 13. | Group: Atmospheric Pollution |
| 14. | Sampling Procedure: IS Method | | 15. | Product: Ambient Air |
| 16. | Description of Sample: | Sampling Bottles: Sealed √ | Filter Paper: Packed √ | Bladder: Clamped √ |
| 17. | **Environment Condition:** | Temp: Normal / Humidity: Moderate | Wind speed: Moderate | Cloud cover: Partly Cloudy |
| | Rain: Light | Wind Direction: Down wind | Wind blowing from: N | Station category: Industrial |
| 18. | Sample Received Date: 13.09.2023 | | | |

### TEST RESULTS

| S.No | Parameters | Unit (SI) | | Results | Specification/ SPCB Norms | Method Used |
|---|---|---|---|---|---|---|
| 1. | $PM_{10}$ | µg /m³ | : | 37 | 100 | IS 5182 (Part 23) : 2006 |
| 2. | $PM_{2.5}$ | µg /m³ | : | 10 | 60 | Guidelines By CPCB(Vol-1) |
| 3. | Sulphur Dioxide ($SO_2$) | µg /m³ | : | 8.89 | 80 | IS 5182 (Part 2 ) :2001 |
| 4. | Nitrogen Oxide ($NO_x$) | µg /m³ | : | 16.70 | 80 | IS 5182 (Part 6 ) :2006 |
| 5. | Ammonia($NH_3$) | µg /m³ | : | N.D. | 400 | NAAQMS Manual by CPCB |
| 6. | Lead (pb) | µg /m³ | : | N.D. | 1 | USEPA(2000)-Method 29 |
| 7. | Arsenic | ng/m³ | : | <5 | 06 | USEPA(2000)-Method 29 |
| 8. | Ozone | µg /m³ | : | <1 | 100 | IS 5182(Part 9): 1974 |
| 9. | Nickel | ng/m³ | : | <1 | 20 | USEPA(2000)-Method 29 |
| 10. | Benzene | µg /m³ | : | <3 | 05 | IS 5182(Part 11): 2006 |

**Remark : N.D.: Not Detected**

**Authorized By -**

**Name : Sapana Amin** | **Designation : Lab Incharge**

NOTE:
1) Reports may be reproduced, if required, but only in full and only with written approval of the laboratory.
2) Re analysis of sample will be done, if requested within 7 days from the date of Reporting of sample if the samples are not consumed during analysis.
3) The results reported above relate to the sample identified under Sample Details.

----------END OF REPORT----------

# KADAM ENVIRONMENTAL CONSULTANTS

An ISO 9001-2015 Certified Company (MoEF Approved)

871/B/3, Near Himalaya Machinery, GIDC Makarpura, Vadodara-10.
Phone : (O) 0265 - 6131000, 6131001


## ENVIRONMENTAL MONITORING REPORT

## LABORATORY TEST REPORT - AMBIENT

**REPORT NO.: SEP23/031/44**

### SAMPLE DETAILS

| | | | | |
|---|---|---|---|---|
| 1. | Name & Address of Client: Bharat Petroleum Corporation Ltd.<br>Bina Refinery, Village: Agasod, Bina - 470124, Dist: Sagar, Madhya Pradesh, India. | | | |
| 2. | Sample ID: 2148088246 – 031SE23AQ02 | | 3. | Client Representative: Mr. Anil Medhe |
| 4. | Sampling Date: 05.09.2023 | | 5. | Sampling Location: Near Flare Stack (South of Refinery) |
| 6. | Sampling time: 10:40 hr | | 7. | Sampling Duration: 24 Hrs |
| 8. | Analysis commenced on: 13.09.2023 | | 9. | Analysis Completed on: 15.09.2023 |
| 10. | Reporting Date: 26.09.2023 | | 11. | Discipline: Chemical |
| 12. | Sample Collected By: Mr. Jitendra Sinha | | 13. | Group: Atmospheric Pollution |
| 14. | Sampling Procedure: IS Method | | 15. | Product: Ambient Air |
| 16. | Description of Sample: | Sampling Bottles: Sealed √ | Filter Paper: Packed √ | Bladder: Clamped √ |
| 17. | **Environment Condition:** | Temp: Normal / Humidity: Moderate | Wind speed: Moderate | Cloud cover: Partly Cloudy |
| | Rain: Light | Wind Direction: Down wind | Wind blowing from: N | Station category: Industrial |
| 18. | Sample Received Date: 13.09.2023 | | | |

### TEST RESULTS

| S.No | Parameters | Unit (SI) | | Results | Specification/ SPCB Norms | Method Used |
|---|---|---|---|---|---|---|
| 1. | CO | $mg/m^3$ | : | 0.721 | 02 | Gas Chromatography |
| 2. | Benzo (a) Pyrene | $ng/m^3$ | : | <0.5 | 01 | IS 5182 (Part 12): 2004 |

**Remark :**

**Authorized By -**

**Name : Sapana Amin** **Designation : Lab Incharge**

NOTE:
1) Reports may be reproduced, if required, but only in full and only with written approval of the laboratory.
2) Re analysis of sample will be done, if requested within 7 days from the date of Reporting of sample if the samples are not consumed during analysis.
3) The results reported above relate to the sample identified under Sample Details.

----------END OF REPORT----------

KADAM ENVIRONMENTAL CONSULTANTS
An ISO 9001-2015 Certified Company (MoEF Approved)
871/B/3, Near Himalaya Machinery, GIDC Makarpura, Vadodara-10.
Phone : (O) 0265 - 6131000, 6131001

TC-7080

## ENVIRONMENTAL MONITORING REPORT

## LABORATORY TEST REPORT - AMBIENT

REPORT NO.: SEP23/031/35 (ULR- TC709923000019183F)

### SAMPLE DETAILS

| | | | | |
|---|---|---|---|---|
| 1. | Name & Address of Client: Bharat Petroleum Corporation Ltd.<br>Bina Refinery, Village: Agasod, Bina - 470124, Dist: Sagar, Madhya Pradesh, India. | | | |
| 2. | Sample ID: 2148088246 – 031SE23AQ01 | | 3. | Client Representative: Mr. Anil Medhe |
| 4. | Sampling Date: 04.09.2023 | | 5. | Sampling Location: Near Canteen (West of Refinery) |
| 6. | Sampling time: 10:00 hr | | 7. | Sampling Duration: 24 Hrs |
| 8. | Analysis commenced on: 13.09.2023 | | 9. | Analysis Completed on: 15.09.2023 |
| 10. | Reporting Date: 26.09.2023 | | 11. | Discipline: Chemical |
| 12. | Sample Collected By: Mr. Jitendra Sinha | | 13. | Group: Atmospheric Pollution |
| 14. | Sampling Procedure: IS Method | | 15. | Product: Ambient Air |
| 16. | Description of Sample: | Sampling Bottles: Sealed √ | Filter Paper: Packed √ | Bladder: Clamped √ |
| 17. | **Environment Condition:** | Temp: Normal / Humidity: Moderate | Wind speed: Smooth | Cloud cover: Clear sky |
| | Rain: No Rain | Wind Direction: Cross wind | Wind blowing from: N | Station category: Industrial |
| 18. | Sample Received Date: 13.09.2023 | | | |

### TEST RESULTS

| S.No | Parameters | Unit (SI) | | Results | Specification/ SPCB Norms | Method Used |
|---|---|---|---|---|---|---|
| 1. | $PM_{10}$ | µg /m³ | : | 51 | 100 | IS 5182 (Part 23) : 2006 |
| 2. | PM 2.5 | µg /m³ | : | 25 | 60 | Guidelines By CPCB(Vol-1) |
| 3. | Sulphur Dioxide ($SO_2$) | µg /m³ | : | 7.11 | 80 | IS 5182 (Part 2 ) :2001 |
| 4. | Nitrogen Oxide ($NO_x$) | µg /m³ | : | 14.89 | 80 | IS 5182 (Part 6 ) :2006 |
| 5. | Ammonia($NH_3$) | µg /m³ | : | N.D. | 400 | NAAQMS Manual by CPCB |
| 6. | Lead (pb) | µg /m³ | : | N.D. | 1 | USEPA(2000)-Method 29 |
| 7. | Arsenic | ng/m³ | : | <5 | 06 | USEPA(2000)-Method 29 |
| 8. | Ozone | µg /m³ | : | <1 | 100 | IS 5182(Part 9): 1974 |
| 9. | Nickel | ng/m³ | : | <1 | 20 | USEPA(2000)-Method 29 |
| 10. | Benzene | µg /m³ | : | <3 | 05 | IS 5182(Part 11): 2006 |

**Remark : N.D.: Not Detected**

**Authorized By -**

**Name : Sapana Amin** | **Designation : Lab Incharge**

NOTE:
1) Reports may be reproduced, if required, but only in full and only with written approval of the laboratory.
2) Re analysis of sample will be done, if requested within 7 days from the date of Reporting of sample if the samples are not consumed during analysis.
3) The results reported above relate to the sample identified under Sample Details.

----------END OF REPORT----------

# KADAM ENVIRONMENTAL CONSULTANTS

An ISO 9001-2015 Certified Company (MoEF Approved)

871/B/3, Near Himalaya Machinery, GIDC Makarpura, Vadodara-10.
Phone : (O) 0265 - 6131000, 6131001


## ENVIRONMENTAL MONITORING REPORT

### LABORATORY TEST REPORT - AMBIENT

**REPORT NO.: SEP23/031/43**

### SAMPLE DETAILS

| | | | | |
|---|---|---|---|---|
| 1. | Name & Address of Client: Bharat Petroleum Corporation Ltd.<br>Bina Refinery, Village: Agasod, Bina - 470124, Dist: Sagar, Madhya Pradesh, India. | | | |
| 2. | Sample ID: 2148088246 – 031SE23AQ01 | | 3. | Client Representative: Mr. Anil Medhe |
| 4. | Sampling Date: 04.09.2023 | | 5. | Sampling Location: Near Canteen (West of Refinery) |
| 6. | Sampling time: 10:00 hr | | 7. | Sampling Duration: 24 Hrs |
| 8. | Analysis commenced on: 13.09.2023 | | 9. | Analysis Completed on: 15.09.2023 |
| 10. | Reporting Date: 26.09.2023 | | 11. | Discipline: Chemical |
| 12. | Sample Collected By: Mr. Jitendra Sinha | | 13. | Group: Atmospheric Pollution |
| 14. | Sampling Procedure: IS Method | | 15. | Product: Ambient Air |
| 16. | Description of Sample: | Sampling Bottles: Sealed √ | Filter Paper: Packed √ | Bladder: Clamped √ |
| 17. | **Environment Condition:** | Temp: Normal / Humidity: Moderate | Wind speed: Smooth | Cloud cover: Clear sky |
| | Rain: No Rain | Wind Direction: Cross wind | Wind blowing from: N | Station category: Industrial |
| 18. | Sample Received Date: 13.09.2023 | | | |

### TEST RESULTS

| S.No | Parameters | Unit (SI) | | Results | Specification/ SPCB Norms | Method Used |
|---|---|---|---|---|---|---|
| 1. | CO | $mg/m^3$ | : | 0.606 | 02 | Gas Chromatography |
| 2. | Benzo (a) Pyrene | $ng/m^3$ | : | <0.5 | 01 | IS 5182 (Part 12): 2004 |

**Remark :**

**Authorized By :**

**Name : Sapana Amin** | **Designation : Lab Incharge**

NOTE:
1) Reports may be reproduced, if required, but only in full and only with written approval of the laboratory.
2) Re analysis of sample will be done, if requested within 7 days from the date of Reporting of sample if the samples are not consumed during analysis.
3) The results reported above relate to the sample identified under Sample Details.

----------END OF REPORT----------

## LABORATORY TEST REPORT - AMBIENT

**REPORT NO.: SEP23/031/37 (ULR- TC709923000019185F)**

### SAMPLE DETAILS

| | | | | |
|---|---|---|---|---|
| 1. | Name & Address of Client: Bharat Petroleum Corporation Ltd.<br>Bina Refinery, Village: Agasod, Bina - 470124, Dist: Sagar, Madhya Pradesh, India. | | | |
| 2. | Sample ID: 2148088246 – 031SE23AQ03 | | 3. | Client Representative: Mr. Anil Medhe |
| 4. | Sampling Date: 06.09.2023 | | 5. | Sampling Location: Near BDT (East of Refinery) |
| 6. | Sampling time: 11:20 hr | | 7. | Sampling Duration: 24 Hrs |
| 8. | Analysis commenced on: 13.09.2023 | | 9. | Analysis Completed on: 15.09.2023 |
| 10. | Reporting Date: 26.09.2023 | | 11. | Discipline: Chemical |
| 12. | Sample Collected By: Mr. Jitendra Sinha | | 13. | Group: Atmospheric Pollution |
| 14. | Sampling Procedure: IS Method | | 15. | Product: Ambient Air |
| 16. | Description of Sample: | Sampling Bottles: Sealed √ | Filter Paper: Packed √ | Bladder: Clamped √ |
| 17. | **Environment Condition:** | Temp: Normal / Humidity: Moderate | Wind speed: Smooth | Cloud cover: Partly Cloudy |
| | Rain: Light | Wind Direction: Cross wind | Wind blowing from: N | Station category: Industrial |
| 18. | Sample Received Date: 13.09.2023 | | | |

### TEST RESULTS

| S.No | Parameters | Unit (SI) | | Results | Specification/ SPCB Norms | Method Used |
|---|---|---|---|---|---|---|
| 1. | $PM_{10}$ | µg /m³ | : | 38 | 100 | IS 5182 (Part 23) : 2006 |
| 2. | $PM_{2.5}$ | µg /m³ | : | 14 | 60 | Guidelines By CPCB(Vol-1) |
| 3. | Sulphur Dioxide ($SO_2$) | µg /m³ | : | 7.56 | 80 | IS 5182 (Part 2 ) :2001 |
| 4. | Nitrogen Oxide ($NO_x$) | µg /m³ | : | 15.54 | 80 | IS 5182 (Part 6 ) :2006 |
| 5. | Ammonia($NH_3$) | µg /m³ | : | N.D. | 400 | NAAQMS Manual by CPCB |
| 6. | Lead (pb) | µg /m³ | : | N.D. | 1 | USEPA(2000)-Method 29 |
| 7. | Arsenic | ng/m³ | : | <5 | 06 | USEPA(2000)-Method 29 |
| 8. | Ozone | µg /m³ | : | <1 | 100 | IS 5182(Part 9): 1974 |
| 9. | Nickel | ng/m³ | : | <1 | 20 | USEPA(2000)-Method 29 |
| 10. | Benzene | µg /m³ | : | <3 | 05 | IS 5182(Part 11): 2006 |

**Remark : N.D.: Not Detected**

**Authorized By -**

**Name : Sapana Amin** | **Designation : Lab Incharge**

NOTE:
1) Reports may be reproduced, if required, but only in full and only with written approval of the laboratory.
2) Re analysis of sample will be done, if requested within 7 days from the date of Reporting of sample if the samples are not consumed during analysis.
3) The results reported above relate to the sample identified under Sample Details.

----------END OF REPORT----------

## LABORATORY TEST REPORT - AMBIENT

**REPORT NO.: SEP23/031/45**

### SAMPLE DETAILS

| | | | | |
|---|---|---|---|---|
| 1. | Name & Address of Client: Bharat Petroleum Corporation Ltd.<br>Bina Refinery, Village: Agasod, Bina - 470124, Dist: Sagar, Madhya Pradesh, India. | | | |
| 2. | Sample ID: 2148088246 – 031SE23AQ03 | | 3. | Client Representative: Mr. Anil Medhe |
| 4. | Sampling Date: 06.09.2023 | | 5. | Sampling Location: Near BDT (East of Refinery) |
| 6. | Sampling time: 11:20 hr | | 7. | Sampling Duration: 24 Hrs |
| 8. | Analysis commenced on: 13.09.2023 | | 9. | Analysis Completed on: 15.09.2023 |
| 10. | Reporting Date: 26.09.2023 | | 11. | Discipline: Chemical |
| 12. | Sample Collected By: Mr. Jitendra Sinha | | 13. | Group: Atmospheric Pollution |
| 14. | Sampling Procedure: IS Method | | 15. | Product: Ambient Air |
| 16. | Description of Sample: | Sampling Bottles: Sealed √ | Filter Paper: Packed √ | Bladder: Clamped √ |
| 17. | **Environment Condition:** | Temp: Normal / Humidity: Moderate | Wind speed: Smooth | Cloud cover: Partly Cloudy |
| | Rain: Light | Wind Direction: Cross wind | Wind blowing from: N | Station category: Industrial |
| 18. | Sample Received Date: 13.09.2023 | | | |

### TEST RESULTS

| S.No | Parameters | Unit (SI) | | Results | Specification/ SPCB Norms | Method Used |
|---|---|---|---|---|---|---|
| 1. | CO | $mg/m^3$ | : | 0.664 | 02 | Gas Chromatography |
| 2. | Benzo (a) Pyrene | $ng/m^3$ | : | <0.5 | 01 | IS 5182 (Part 12): 2004 |

**Remark :**

**Authorized By -**

**Name : Sapana Amin** | **Designation : Lab Incharge**

NOTE:
1) Reports may be reproduced, if required, but only in full and only with written approval of the laboratory.
2) Re analysis of sample will be done, if requested within 7 days from the date of Reporting of sample if the samples are not consumed during analysis.
3) The results reported above relate to the sample identified under Sample Details.

----------END OF REPORT----------

KADAM ENVIRONMENTAL CONSULTANTS
An ISO 9001-2015 Certified Company (MoEF Approved)
871/B/3, Near Himalaya Machinery, GIDC Makarpura, Vadodara-10.
Phone : (O) 0265 - 6131000, 6131001

TC-7999

## ENVIRONMENTAL MONITORING REPORT

## LABORATORY TEST REPORT - AMBIENT

REPORT NO.: SEP23/031/38 (ULR- TC709923000019188F)

### SAMPLE DETAILS

| | | | | |
|---|---|---|---|---|
| 1. | Name & Address of Client: Bharat Petroleum Corporation Ltd.<br>Bina Refinery, Village: Agasod, Bina - 470124, Dist: Sagar, Madhya Pradesh, India. | | | |
| 2. | Sample ID: 2148088246 – 031SE23AQ04 | | 3. | Client Representative: Mr. Anil Medhe |
| 4. | Sampling Date: 07.09.2023 | | 5. | Sampling Location: Near ETP (North of Refinery) |
| 6. | Sampling time: 12:30 hr | | 7. | Sampling Duration: 24 Hrs |
| 8. | Analysis commenced on: 13.09.2023 | | 9. | Analysis Completed on: 15.09.2023 |
| 10. | Reporting Date: 26.09.2023 | | 11. | Discipline: Chemical |
| 12. | Sample Collected By: Mr. Jitendra Sinha | | 13. | Group: Atmospheric Pollution |
| 14. | Sampling Procedure: IS Method | | 15. | Product: Ambient Air |
| 16. | Description of Sample: | Sampling Bottles: Sealed √ | Filter Paper: Packed √ | Bladder: Clamped √ |
| 17. | **Environment Condition:** | Temp: Normal / Humidity: Moderate | Wind speed: Smooth | Cloud cover: Partly Cloudy |
| | Rain: Light | Wind Direction: Up wind | Wind blowing from: N | Station category: Industrial |
| 18. | Sample Received Date: 13.09.2023 | | | |

### TEST RESULTS

| S.No | Parameters | Unit (SI) | | Results | Specification/ SPCB Norms | Method Used |
|---|---|---|---|---|---|---|
| 1. | $PM_{10}$ | µg /m³ | : | 32 | 100 | IS 5182 (Part 23) : 2006 |
| 2. | $PM_{2.5}$ | µg /m³ | : | 12 | 60 | Guidelines By CPCB(Vol-1) |
| 3. | Sulphur Dioxide ($SO_2$) | µg /m³ | : | 10.37 | 80 | IS 5182 (Part 2 ) :2001 |
| 4. | Nitrogen Oxide ($NO_x$) | µg /m³ | : | 17.19 | 80 | IS 5182 (Part 6 ) :2006 |
| 5. | Ammonia($NH_3$) | µg /m³ | : | N.D. | 400 | NAAQMS Manual by CPCB |
| 6. | Lead (pb) | µg /m³ | : | N.D. | 1 | USEPA(2000)-Method 29 |
| 7. | Arsenic | ng/m³ | : | <5 | 06 | USEPA(2000)-Method 29 |
| 8. | Ozone | µg /m³ | : | <1 | 100 | IS 5182(Part 9): 1974 |
| 9. | Nickel | ng/m³ | : | <1 | 20 | USEPA(2000)-Method 29 |
| 10. | Benzene | µg /m³ | : | <3 | 05 | IS 5182(Part 11): 2006 |

**Remark : N.D.: Not Detected**

**Authorized By :**

**Name : Sapana Amin** | **Designation : Lab Incharge**

NOTE:
1) Reports may be reproduced, if required, but only in full and only with written approval of the laboratory.
2) Re analysis of sample will be done, if requested within 7 days from the date of Reporting of sample if the samples are not consumed during analysis.
3) The results reported above relate to the sample identified under Sample Details.

----------END OF REPORT----------

# KADAM ENVIRONMENTAL CONSULTANTS

An ISO 9001-2015 Certified Company (MoEF Approved)

871/B/3, Near Himalaya Machinery, GIDC Makarpura, Vadodara-10.
Phone : (O) 0265 - 6131000, 6131001


## ENVIRONMENTAL MONITORING REPORT

### LABORATORY TEST REPORT - AMBIENT

**REPORT NO.: SEP23/031/46**

### SAMPLE DETAILS

| | | | | |
|---|---|---|---|---|
| 1. | Name & Address of Client: Bharat Petroleum Corporation Ltd.<br>Bina Refinery, Village: Agasod, Bina - 470124, Dist: Sagar, Madhya Pradesh, India. | | | |
| 2. | Sample ID: 2148088246 – 031SE23AQ04 | | 3. | Client Representative : Mr. Anil Medhe |
| 4. | Sampling Date: 07.09.2023 | | 5. | Sampling Location: Near ETP (North of Refinery) |
| 6. | Sampling time: 12:30 hr | | 7. | Sampling Duration: 24 Hrs |
| 8. | Analysis commenced on: 13.09.2023 | | 9. | Analysis Completed on: 15.09.2023 |
| 10. | Reporting Date: 26.09.2023 | | 11. | Discipline: Chemical |
| 12. | Sample Collected By: Mr. Jitendra Sinha | | 13. | Group: Atmospheric Pollution |
| 14. | Sampling Procedure: IS Method | | 15. | Product: Ambient Air |
| 16. | Description of Sample: | Sampling Bottles: Sealed √ | Filter Paper: Packed √ | Bladder: Clamped √ |
| 17. | **Environment Condition:** | Temp: Normal / Humidity: Moderate | Wind speed: Smooth | Cloud cover: Partly Cloudy |
| | Rain: Light | Wind Direction: Up wind | Wind blowing from: N | Station category: Industrial |
| 18. | Sample Received Date: 13.09.2023 | | | |

### TEST RESULTS

| S.No | Parameters | Unit (SI) | | Results | Specification/ SPCB Norms | Method Used |
|---|---|---|---|---|---|---|
| 1. | CO | $mg/m^3$ | : | 0.629 | 02 | Gas Chromatography |
| 2. | Benzo (a) Pyrene | $ng/m^3$ | : | <0.5 | 01 | IS 5182 (Part 12): 2004 |

**Remark :**

**Authorized By -**

**Name : Sapana Amin** **Designation : Lab Incharge**

NOTE:
1) Reports may be reproduced, if required, but only in full and only with written approval of the laboratory.
2) Re analysis of sample will be done, if requested within 7 days from the date of Reporting of sample if the samples are not consumed during analysis.
3) The results reported above relate to the sample identified under Sample Details.

----------END OF REPORT----------

# KADAM ENVIRONMENTAL CONSULTANTS

An ISO 9001-2015 Certified Company (MoEF Approved)

871/B/3, Near Himalaya Machinery, GIDC Makarpura, Vadodara-10.
Phone : (O) 0265 - 6131000, 6131001


TC-7099

## ENVIRONMENTAL MONITORING REPORT

## LABORATORY TEST REPORT - AMBIENT AIR MONITORING

REPORT NO.: AUG23/098/28 (ULR- TC709923000016714F)

### SAMPLE DETAILS

| | | | | |
|---|---|---|---|---|
| 1. | Name & Address of Client: Bharat Petroleum Corporation Ltd.<br>Bina Refinery, Village: Agasod, Bina - 470124, Dist: Sagar, Madhya Pradesh, India. | | | |
| 2. | Sample ID: 2148088246 – 098AU23AQ02 | | 3. | Client Representative: Mr. Anil Medhe |
| 4. | Sampling Date: 14.08.2023 | | 5. | Sampling Location: Near Flare Stack (South of Refinery) |
| 6. | Sampling time: 10:00 hr | | 7. | Sampling Duration: 24 Hrs |
| 8. | Analysis commenced on: 21.08.2023 | | 9. | Analysis Completed on: 21.08.2023 |
| 10. | Reporting Date: 28.08.2023 | | 11. | Discipline: Chemical |
| 12. | Sample Collected By: Mr. Jitendra Sinha | | 13. | Group: Atmospheric Pollution |
| 14. | Sampling Procedure: IS: 5182 Method | | 15. | Product: Ambient Air |
| 16. | Description of Sample: | Sampling Bottles: Sealed √ | Filter Paper: Packed √ | Bladder: Clamped √ |
| 17. | **Environment Condition:** | Temp: Normal / Humidity: Moderate | Wind speed: Moderate | Cloud cover: Partly Coudy |
| | Rain: No Rain | Wind Direction: Down wind | Wind blowing from: NNW | Station category: Industrial |
| 18. | Sample Received Date: 21.08.2023 | | | |

### TEST RESULTS

| S.No | Parameters | Unit (SI) | | Results | Specification/ SPCB Norms | Method Used |
|---|---|---|---|---|---|---|
| 1. | $PM_{10}$ | µg /m³ | : | 73 | 100 | IS 5182 (Part 23) : 2006 |
| 2. | $PM_{2.5}$ | µg /m³ | : | 25 | 60 | Guidelines By CPCB(Vol-1) |
| 3. | Sulphur Dioxide ($SO_2$) | µg /m³ | : | 6.22 | 80 | IS 5182 (Part 2 ) :2001 |
| 4. | Nitrogen Oxide ($NO_x$) | µg /m³ | : | 10.17 | 80 | IS 5182 (Part 6 ) :2006 |
| 5. | Ammonia($NH_3$) | µg /m³ | : | N.D. | 400 | NAAQMS Manual by CPCB |
| 6. | Lead (pb) | µg /m³ | : | N.D. | 0.5 | USEPA(2000)-Method 29 |
| 7. | Arsenic | ng/m³ | : | <5 | 06 | USEPA(2000)-Method 29 |
| 8. | Ozone | µg /m³ | : | <1 | 100 | IS 5182(Part 9): 1974 |
| 9. | Nickel | ng/m³ | : | <1 | 20 | USEPA(2000)-Method 29 |
| 10. | Benzene | µg /m³ | : | <3 | 05 | IS 5182(Part 11): 2006 |

**Remark : N.D. - Not Detected.**

**Authorized By -**

**Name : Bhavisha Pandya** | **Designation : Sr.Chemist**

NOTE:
1) Reports may be reproduced, if required, but only in full and only with written approval of the laboratory.
2) Re analysis of sample will be done, if requested within 7 days from the date of Reporting of sample if the samples are not consumed during analysis.
3) The results reported above relate to the sample identified under Sample Details.

----------**END OF REPORT**----------

# KADAM ENVIRONMENTAL CONSULTANTS

An ISO 9001-2015 Certified Company (MoEF Approved)

871/B/3, Near Himalaya Machinery, GIDC Makarpura, Vadodara-10.
Phone : (O) 0265 - 6131000, 6131001


## ENVIRONMENTAL MONITORING REPORT

## LABORATORY TEST REPORT - AMBIENT AIR MONITORING

**REPORT NO.: AUG23/098/32**

### SAMPLE DETAILS

| | | | | |
|---|---|---|---|---|
| 1. | Name & Address of Client: Bharat Petroleum Corporation Ltd.<br>Bina Refinery, Village: Agasod, Bina - 470124, Dist: Sagar, Madhya Pradesh, India. | | | |
| 2. | Sample ID: 2148088246 – 098AU23AQ02 | | 3. | Client Representative: Mr. Anil Medhe |
| 4. | Sampling Date: 14.08.2023 | | 5. | Sampling Location: Near Flare Stack (South of Refinery) |
| 6. | Sampling time: 10:00 hr | | 7. | Sampling Duration: 24 Hrs |
| 8. | Analysis commenced on: 21.08.2023 | | 9. | Analysis Completed on: 21.08.2023 |
| 10. | Reporting Date: 28.08.2023 | | 11. | Discipline: Chemical |
| 12. | Sample Collected By: Mr. Jitendra Sinha | | 13. | Group: Atmospheric Pollution |
| 14. | Sampling Procedure: IS: 5182 Method | | 15. | Product: Ambient Air |
| 16. | Description of Sample: | Sampling Bottles: Sealed √ | Filter Paper: Packed √ | Bladder: Clamped √ |
| 17. | **Environment Condition:** | Temp: Normal / Humidity: Moderate | Wind speed: Moderate | Cloud cover: Partly Cloudy |
| | Rain: No Rain | Wind Direction: Down wind | Wind blowing from: NNW | Station category: Industrial |
| 18. | Sample Received Date: 21.08.2023 | | | |

### TEST RESULTS

| S.No | Parameters | Unit (SI) | | Results | Specification/ SPCB Norms | Method Used |
|---|---|---|---|---|---|---|
| 1. | CO | $mg/m^3$ | : | 0.561 | 02 | Gas Chromatography |
| 2. | Benzo (a) Pyrene | $ng/m^3$ | : | <0.5 | 01 | IS 5182 (Part 12): 2004 |

**Remark :**

**Authorized By**

**Name : Bhavisha Pandya** | **Designation : Sr.Chemist**

NOTE:
1) Reports may be reproduced, if required, but only in full and only with written approval of the laboratory.
2) Re analysis of sample will be done, if requested within 7 days from the date of Reporting of sample if the samples are not consumed during analysis.
3) The results reported above relate to the sample identified under Sample Details.

----------END OF REPORT----------

KADAM ENVIRONMENTAL CONSULTANTS
An ISO 9001-2015 Certified Company (MoEF Approved)
871/B/3, Near Himalaya Machinery, GIDC Makarpura, Vadodara-10.
Phone : (O) 0265 - 6131000, 6131001

TC-7098

# ENVIRONMENTAL MONITORING REPORT

## LABORATORY TEST REPORT - AMBIENT AIR MONITORING

REPORT NO.: AUG23/098/27 (ULR- TC709923000016713F)

### SAMPLE DETAILS

| | | | |
|---|---|---|---|
| 1. | Name & Address of Client: Bharat Petroleum Corporation Ltd.<br>Bina Refinery, Village: Agasod, Bina - 470124, Dist: Sagar, Madhya Pradesh, India. | | |
| 2. | Sample ID: 2148088246 – 098AU23AQ01 | 3. | Client Representative: Mr. Anil Medhe |
| 4. | Sampling Date: 10.08.2023 | 5. | Sampling Location: Near Canteen (West of Refinery) |
| 6. | Sampling time: 11:00 hr | 7. | Sampling Duration: 24 Hrs |
| 8. | Analysis commenced on: 21.08.2023 | 9. | Analysis Completed on: 21.08.2023 |
| 10. | Reporting Date: 28.08.2023 | 11. | Discipline: Chemical |
| 12. | Sample Collected By: Mr. Jitendra Sinha | 13. | Group: Atmospheric Pollution |
| 14. | Sampling Procedure: IS: 5182 Method | 15. | Product: Ambient Air |

| | | | | |
|---|---|---|---|---|
| 16. | Description of Sample: | Sampling Bottles: Sealed √ | Filter Paper: Packed √ | Bladder: Clamped √ |
| 17. | **Environment Condition:** | Temp: Normal / Humidity: Moderate | Wind speed: Smooth | Cloud cover: Partly Cloudy |
| | Rain: No Rain | Wind Direction: Up wind | Wind blowing from: NW | Station category: Industrial |
| 18. | Sample Received Date: 21.08.2023 | | | |

### TEST RESULTS

| S.No | Parameters | Unit (SI) | | Results | Specification/ SPCB Norms | Method Used |
|---|---|---|---|---|---|---|
| 1. | $PM_{10}$ | µg /m³ | : | 62 | 100 | IS 5182 (Part 23) : 2006 |
| 2. | $PM_{2.5}$ | µg /m³ | : | 23 | 60 | Guidelines By CPCB(Vol-1) |
| 3. | Sulphur Dioxide ($SO_2$) | µg /m³ | : | 7.78 | 80 | IS 5182 (Part 2 ) :2001 |
| 4. | Nitrogen Oxide ($NO_x$) | µg /m³ | : | 9.16 | 80 | IS 5182 (Part 6 ) :2006 |
| 5. | Ammonia($NH_3$) | µg /m³ | : | N.D. | 400 | NAAQMS Manual by CPCB |
| 6. | Lead (pb) | µg /m³ | : | N.D. | 0.5 | USEPA(2000)-Method 29 |
| 7. | Arsenic | ng/m³ | : | <5 | 06 | USEPA(2000)-Method 29 |
| 8. | Ozone | µg /m³ | : | <1 | 100 | IS 5182(Part 9): 1974 |
| 9. | Nickel | ng/m³ | : | <1 | 20 | USEPA(2000)-Method 29 |
| 10. | Benzene | µg /m³ | : | <3 | 05 | IS 5182(Part 11): 2006 |

**Remark : N.D. - Not Detected.**

**Authorized By :**

**Name : Bhavisha Pandya** | **Designation : Sr.Chemist**

NOTE:
1) Reports may be reproduced, if required, but only in full and only with written approval of the laboratory.
2) Re analysis of sample will be done, if requested within 7 days from the date of Reporting of sample if the samples are not consumed during analysis.
3) The results reported above relate to the sample identified under Sample Details.

----------END OF REPORT----------

## LABORATORY TEST REPORT - AMBIENT AIR MONITORING

**REPORT NO.: AUG23/098/31**

### SAMPLE DETAILS

| | | | | |
|---|---|---|---|---|
| 1. | Name & Address of Client: Bharat Petroleum Corporation Ltd.<br>Bina Refinery, Village: Agasod, Bina - 470124, Dist: Sagar, Madhya Pradesh, India. | | | |
| 2. | Sample ID: 2148088246 – 098AU23AQ01 | | 3. | Client Representative: Mr. Anil Medhe |
| 4. | Sampling Date: 10.08.2023 | | 5. | Sampling Location: Near Canteen (West of Refinery) |
| 6. | Sampling time: 11:00 hr | | 7. | Sampling Duration: 24 Hrs |
| 8. | Analysis commenced on: 21.08.2023 | | 9. | Analysis Completed on: 21.08.2023 |
| 10. | Reporting Date: 28.08.2023 | | 11. | Discipline: Chemical |
| 12. | Sample Collected By: Mr. Jitendra Sinha | | 13. | Group: Atmospheric Pollution |
| 14. | Sampling Procedure: IS: 5182 Method | | 15. | Product: Ambient Air |
| 16. | Description of Sample: | Sampling Bottles: Sealed √ | Filter Paper: Packed √ | Bladder: Clamped √ |
| 17. | **Environment Condition:** | Temp: Normal / Humidity: Moderate | Wind speed: Smooth | Cloud cover: Partly Cloudy |
| | Rain: No Rain | Wind Direction: Up wind | Wind blowing from: NW | Station category: Industrial |
| 18. | Sample Received Date: 21.08.2023 | | | |

### TEST RESULTS

| S.No | Parameters | Unit (SI) | | Results | Specification/ SPCB Norms | Method Used |
|---|---|---|---|---|---|---|
| 1. | CO | mg/m³ | : | 0.732 | 02 | Gas Chromatography |
| 2. | Benzo (a) Pyrene | ng/m³ | : | <0.5 | 01 | IS 5182 (Part 12): 2004 |

**Remark :**

**Authorized By -**

**Name : Bhavisha Pandya** | **Designation : Sr.Chemist**

NOTE:
1) Reports may be reproduced, if required, but only in full and only with written approval of the laboratory.
2) Re analysis of sample will be done, if requested within 7 days from the date of Reporting of sample if the samples are not consumed during analysis.
3) The results reported above relate to the sample identified under Sample Details.

----------END OF REPORT----------

KADAM ENVIRONMENTAL CONSULTANTS
An ISO 9001-2015 Certified Company (MoEF Approved)
871/B/3, Near Himalaya Machinery, GIDC Makarpura, Vadodara-10.
Phone : (O) 0265 - 6131000, 6131001

TC-7099

## ENVIRONMENTAL MONITORING REPORT

## LABORATORY TEST REPORT - AMBIENT AIR MONITORING

REPORT NO.: AUG23/098/29 (ULR- TC709923000016715F)

### SAMPLE DETAILS

| | | | | |
|---|---|---|---|---|
| 1. | Name & Address of Client: Bharat Petroleum Corporation Ltd.<br>Bina Refinery, Village: Agasod, Bina - 470124, Dist: Sagar, Madhya Pradesh, India. | | | |
| 2. | Sample ID: 2148088246 – 098AU23AQ03 | | 3. | Client Representative: Mr. Anil Medhe |
| 4. | Sampling Date: 17.08.2023 | | 5. | Sampling Location: Near BDT (East of Refinery) |
| 6. | Sampling time: 11:40 hr | | 7. | Sampling Duration: 24 Hrs |
| 8. | Analysis commenced on: 21.08.2023 | | 9. | Analysis Completed on: 21.08.2023 |
| 10. | Reporting Date: 28.08.2023 | | 11. | Discipline: Chemical |
| 12. | Sample Collected By: Mr. Jitendra Sinha | | 13. | Group: Atmospheric Pollution |
| 14. | Sampling Procedure: IS: 5182 Method | | 15. | Product: Ambient Air |
| 16. | Description of Sample: | Sampling Bottles: Sealed √ | Filter Paper: Packed √ | Bladder: Clamped √ |
| 17. | **Environment Condition:** | Temp: Normal / Humidity: Moderate | Wind speed: Smooth | Cloud cover: Partly Cloudy |
| | Rain: Very Light | Wind Direction: Cross wind | Wind blowing from: NW | Station category: Industrial |
| 18. | Sample Received Date: 21.08.2023 | | | |

### TEST RESULTS

| S.No | Parameters | Unit (SI) | | Results | Specification/ SPCB Norms | Method Used |
|---|---|---|---|---|---|---|
| 1. | $PM_{10}$ | µg /m³ | : | 67 | 100 | IS 5182 (Part 23) : 2006 |
| 2. | $PM_{2.5}$ | µg /m³ | : | 20 | 60 | Guidelines By CPCB(Vol-1) |
| 3. | Sulphur Dioxide ($SO_2$) | µg /m³ | : | 5.76 | 80 | IS 5182 (Part 2 ) :2001 |
| 4. | Nitrogen Oxide ($NO_x$) | µg /m³ | : | 11.07 | 80 | IS 5182 (Part 6 ) :2006 |
| 5. | Ammonia($NH_3$) | µg /m³ | : | N.D. | 400 | NAAQMS Manual by CPCB |
| 6. | Lead (pb) | µg /m³ | : | N.D. | 0.5 | USEPA(2000)-Method 29 |
| 7. | Arsenic | ng/m³ | : | <5 | 06 | USEPA(2000)-Method 29 |
| 8. | Ozone | µg /m³ | : | <1 | 100 | IS 5182(Part 9): 1974 |
| 9. | Nickel | ng/m³ | : | <1 | 20 | USEPA(2000)-Method 29 |
| 10. | Benzene | µg /m³ | : | <3 | 05 | IS 5182(Part 11): 2006 |

**Remark : N.D. - Not Detected.**

**Authorized By -**

**Name : Bhavisha Pandya** | **Designation : Sr.Chemist**

NOTE: 1) Reports may be reproduced, if required, but only in full and only with written approval of the laboratory.
2) Re analysis of sample will be done, if requested within 7 days from the date of Reporting of sample if the samples are not consumed during analysis.
3) The results reported above relate to the sample identified under Sample Details.

----------END OF REPORT----------

# KADAM ENVIRONMENTAL CONSULTANTS

An ISO 9001-2015 Certified Company (MoEF Approved)

871/B/3, Near Himalaya Machinery, GIDC Makarpura, Vadodara-10.
Phone : (O) 0265 - 6131000, 6131001


## ENVIRONMENTAL MONITORING REPORT

### LABORATORY TEST REPORT - AMBIENT AIR MONITORING

**REPORT NO.: AUG23/098/33**

### SAMPLE DETAILS

| | | | | |
|---|---|---|---|---|
| 1. | Name & Address of Client: Bharat Petroleum Corporation Ltd.<br>Bina Refinery, Village: Agasod, Bina - 470124, Dist: Sagar, Madhya Pradesh, India. | | | |
| 2. | Sample ID: 2148088246 – 098AU23AQ03 | | 3. | Client Representative: Mr. Anil Medhe |
| 4. | Sampling Date: 17.08.2023 | | 5. | Sampling Location: Near BDT (East of Refinery) |
| 6. | Sampling time: 11:40 hr | | 7. | Sampling Duration: 24 Hrs |
| 8. | Analysis commenced on: 21.08.2023 | | 9. | Analysis Completed on: 21.08.2023 |
| 10. | Reporting Date: 28.08.2023 | | 11. | Discipline: Chemical |
| 12. | Sample Collected By: Mr. Jitendra Sinha | | 13. | Group: Atmospheric Pollution |
| 14. | Sampling Procedure: IS: 5182 Method | | 15. | Product: Ambient Air |
| 16. | Description of Sample: | Sampling Botties: Sealed √ | Filter Paper: Packed √ | Bladder: Clamped √ |
| 17. | **Environment Condition:** | Temp: Normal / Humidity: Moderate | Wind speed: Smooth | Cloud cover: Partly Cloudy |
| | Rain: Very Light | Wind Direction: Cross wind | Wind blowing from: NW | Station category: Industrial |
| 18. | Sample Received Date: 21.08.2023 | | | |

### TEST RESULTS

| S.No | Parameters | Unit (SI) | | Results | Specification/ SPCB Norms | Method Used |
|---|---|---|---|---|---|---|
| 1. | CO | mg/m³ | : | 0.664 | 02 | Gas Chromatography |
| 2. | Benzo (a) Pyrene | ng/m³ | : | <0.5 | 01 | IS 5182 (Part 12): 2004 |

**Remark :**

**Authorized By :**

**Name : Bhavisha Pandya** | **Designation : Sr.Chemist**

NOTE:
1) Reports may be reproduced, if required, but only in full and only with written approval of the laboratory.
2) Re analysis of sample will be done, if requested within 7 days from the date of Reporting of sample if the samples are not consumed during analysis.
3) The results reported above relate to the sample identified under Sample Details.

----------END OF REPORT----------

TC-7999

# KADAM ENVIRONMENTAL CONSULTANTS

An ISO 9001-2015 Certified Company (MoEF Approved)

871/B/3, Near Himalaya Machinery, GIDC Makarpura, Vadodara-10.
Phone : (O) 0265 - 6131000, 6131001

## ENVIRONMENTAL MONITORING REPORT

## LABORATORY TEST REPORT - AMBIENT AIR MONITORING

REPORT NO.: AUG23/098/30 (ULR- TC709923000016716F)

### SAMPLE DETAILS

| | | | | | |
|---|---|---|---|---|---|
| 1. | Name & Address of Client: Bharat Petroleum Corporation Ltd.<br>Bina Refinery, Village: Agasod, Bina - 470124, Dist: Sagar, Madhya Pradesh, India. | | | | |
| 2. | Sample ID: 2148088246 – 098AU23AQ04 | | 3. | Client Representative: Mr. Anil Medhe | |
| 4. | Sampling Date: 16.08.2023 | | 5. | Sampling Location: Near ETP (North of Refinery) | |
| 6. | Sampling time: 11:00 hr | | 7. | Sampling Duration: 24 Hrs | |
| 8. | Analysis commenced on: 21.08.2023 | | 9. | Analysis Completed on: 21.08.2023 | |
| 10. | Reporting Date: 28.08.2023 | | 11. | Discipline: Chemical | |
| 12. | Sample Collected By: Mr. Jitendra Sinha | | 13. | Group: Atmospheric Pollution | |
| 14. | Sampling Procedure: IS: 5182 Method | | 15. | Product: Ambient Air | |
| 16. | Description of Sample: | Sampling Bottles: Sealed √ | | Filter Paper: Packed √ | Bladder: Clamped √ |
| 17. | **Environment Condition:** | Temp: Normal | Humidity: Moderate | Wind speed: Moderate | Cloud cover: Partly Cloudy |
| | Rain: No Rain | Wind Direction: Up wind | | Wind blowing from: NW | Station category: Industrial |
| 18. | Sample Received Date: 21.08.2023 | | | | |

### TEST RESULTS

| S.No | Parameters | Unit (SI) | | Results | Specification/ SPCB Norms | Method Used |
|---|---|---|---|---|---|---|
| 1. | $PM_{10}$ | µg /m³ | : | 75 | 100 | IS 5182 (Part 23) : 2006 |
| 2. | $PM_{2.5}$ | µg /m³ | : | 29 | 60 | Guidelines By CPCB(Vol-1) |
| 3. | Sulphur Dioxide ($SO_2$) | µg /m³ | : | 6.51 | 80 | IS 5182 (Part 2 ) :2001 |
| 4. | Nitrogen Oxide ($NO_x$) | µg /m³ | : | 9.06 | 80 | IS 5182 (Part 6 ) :2006 |
| 5. | Ammonia($NH_3$) | µg /m³ | : | N.D. | 400 | NAAQMS Manual by CPCB |
| 6. | Lead (pb) | µg /m³ | : | N.D. | 0.5 | USEPA(2000)-Method 29 |
| 7. | Arsenic | ng/m³ | : | <5 | 06 | USEPA(2000)-Method 29 |
| 8. | Ozone | µg /m³ | : | <1 | 100 | IS 5182(Part 9): 1974 |
| 9. | Nickel | ng/m³ | : | <1 | 20 | USEPA(2000)-Method 29 |
| 10. | Benzene | µg /m³ | : | <3 | 05 | IS 5182(Part 11): 2006 |

**Remark : N.D. - Not Detected.**

**Authorized By -**

**Name : Bhavisha Pandya** | **Designation : Sr.Chemist**

NOTE:
1) Reports may be reproduced, if required, but only in full and only with written approval of the laboratory.
2) Re analysis of sample will be done, if requested within 7 days from the date of Reporting of sample if the samples are not consumed during analysis.
3) The results reported above relate to the sample identified under Sample Details.

----------END OF REPORT----------

# KADAM ENVIRONMENTAL CONSULTANTS

An ISO 9001-2015 Certified Company (MoEF Approved)

871/B/3, Near Himalaya Machinery, GIDC Makarpura, Vadodara-10.
Phone : (O) 0265 - 6131000, 6131001


**ENVIRONMENTAL MONITORING REPORT**

## LABORATORY TEST REPORT - AMBIENT AIR MONITORING

**REPORT NO.: AUG23/098/34**

### SAMPLE DETAILS

| | | | | |
|---|---|---|---|---|
| 1. | Name & Address of Client: Bharat Petroleum Corporation Ltd.<br>Bina Refinery, Village: Agasod, Bina - 470124, Dist: Sagar, Madhya Pradesh, India. | | | |
| 2. | Sample ID: 2148088246 – 098AU23AQ04 | | 3. | Client Representative : Mr. Anil Medhe |
| 4. | Sampling Date: 16.08.2023 | | 5. | Sampling Location: Near ETP (North of Refinery) |
| 6. | Sampling time: 11:00 hr | | 7. | Sampling Duration: 24 Hrs |
| 8. | Analysis commenced on: 21.08.2023 | | 9. | Analysis Completed on: 21.08.2023 |
| 10. | Reporting Date: 28.08.2023 | | 11. | Discipline: Chemical |
| 12. | Sample Collected By: Mr. Jitendra Sinha | | 13. | Group: Atmospheric Pollution |
| 14. | Sampling Procedure: IS: 5182 Method | | 15. | Product: Ambient Air |
| 16. | Description of Sample: | Sampling Botties: Sealed √ | Filter Paper: Packed √ | Bladder: Clamped √ |
| 17. | **Environment Condition:** | Temp: Normal / Humidity: Moderate | Wind speed: Moderate | Cloud cover: Partly Cloudy |
| | Rain: No Rain | Wind Direction: Up wind | Wind blowing from: NW | Station category: Industrial |
| 18. | Sample Received Date: 21.08.2023 | | | |

### TEST RESULTS

| S.No | Parameters | Unit (SI) | | Results | Specification/ SPCB Norms | Method Used |
|---|---|---|---|---|---|---|
| 1. | CO | $mg/m^3$ | : | 0.698 | 02 | Gas Chromatography |
| 2. | Benzo (a)-Pyrene | $ng/m^3$ | : | <0.5 | 01 | IS 5182 (Part 12): 2004 |

**Remark :**

**Authorized By :**

**Name : Bhavisha Pandya** | **Designation : Sr.Chemist**

NOTE:
1) Reports may be reproduced, if required, but only in full and only with written approval of the laboratory.
2) Re analysis of sample will be done, if requested within 7 days from the date of Reporting of sample if the samples are not consumed during analysis.
3) The results reported above relate to the sample identified under Sample Details.

----------**END OF REPORT**----------

KADAM ENVIRONMENTAL CONSULTANTS
An ISO 9001-2015 Certified Company (MoEF Approved)
871/B/3, Near Himalaya Machinery, GIDC Makarpura, Vadodara-10.
Phone : (O) 0265 - 6131000, 6131001

TC-7099

## ENVIRONMENTAL MONITORING REPORT

### LABORATORY TEST REPORT - AMBIENT

**REPORT NO.: JUL23/033/02 (ULR- TC709923000014620F)**

### SAMPLE DETAILS

| | | | | |
|---|---|---|---|---|
| 1. | Name & Address of Client: Bharat Petroleum Corporation Ltd.<br>Bina Refinery, Village: Agasod, Bina - 470124, Dist: Sagar, Madhya Pradesh, India. | | | |
| 2. | Sample ID: 2148088246 – 033JL23AQ02 | | 3. | Client Representative: Mr. Anil Medhe |
| 4. | Sampling Date: 03.07.2023 | | 5. | Sampling Location: Near Flare Stack (South of Refinery) |
| 6. | Sampling time: 10:30 hr | | 7. | Sampling Duration: 24 Hrs |
| 8. | Analysis commenced on: 10.07.2023 | | 9. | Analysis Completed on: 10.07.2023 |
| 10. | Reporting Date: 26.07.2023 | | 11. | Discipline: Chemical |
| 12. | Sample Collected By: Mr. Jitendra Sinha | | 13. | Group: Atmospheric Pollution |
| 14. | Sampling Procedure: IS Method | | 15. | Product: Ambient Air |
| 16. | Description of Sample: | Sampling Bottles: Sealed √ | Filter Paper: Packed √ | Bladder: Clamped √ |
| 17. | **Environment Condition:** | Temp: Normal / Humidity: Moderate | Wind speed: Smooth | Cloud cover: Partly Cloudy |
| | Rain: No Rain | Wind Direction: Cross wind | Wind blowing from: W | Station category: Industrial |
| 18. | Sample Received Date: 10.07.2023 | | | |

### TEST RESULTS

| S.No | Parameters | Unit (SI) | | Results | Specification/ SPCB Norms | Method Used |
|---|---|---|---|---|---|---|
| 1. | $PM_{10}$ | µg /m³ | : | 65 | 100 | IS 5182 (Part 23) : 2006 |
| 2. | $PM_{2.5}$ | µg /m³ | : | 23 | 60 | Guidelines By CPCB(Vol-1) |
| 3. | Sulphur Dioxide ($SO_2$) | µg /m³ | : | 9.63 | 80 | IS 5182 (Part 2 ) :2001 |
| 4. | Nitrogen Oxide ($NO_x$) | µg /m³ | : | 16.81 | 80 | IS 5182 (Part 6 ) :2006 |
| 5. | Ammonia($NH_3$) | µg /m³ | : | N.D. | 400 | NAAQMS Manual by CPCB |
| 6. | Lead (pb) | µg /m³ | : | N.D. | 1 | USEPA(2000)-Method 29 |
| 7. | Arsenic | ng/m³ | : | <5 | 06 | USEPA(2000)-Method 29 |
| 8. | Ozone | µg /m³ | : | <1 | 100 | IS 5182(Part 9): 1974 |
| 9. | Nickel | ng/m³ | : | <1 | 20 | USEPA(2000)-Method 29 |
| 10. | Benzene | µg /m³ | : | <3 | 05 | IS 5182(Part 11): 2006 |

**Remark : N.D.: Not Detected**

**Authorized By -**

**Name : Sapana Amin** | **Designation : Lab Incharge**

NOTE:
1) Reports may be reproduced, if required, but only in full and only with written approval of the laboratory.
2) Re analysis of sample will be done, if requested within 7 days from the date of Reporting of sample if the samples are not consumed during analysis.
3) The results reported above relate to the sample identified under Sample Details.

----------END OF REPORT----------

# KADAM ENVIRONMENTAL CONSULTANTS

An ISO 9001-2015 Certified Company (MoEF Approved)

871/B/3, Near Himalaya Machinery, GIDC Makarpura, Vadodara-10.
Phone : (O) 0265 - 6131000, 6131001


## WORK ENVIRONMENT MONITORING REPORT

## LABORATORY TEST REPORT - AMBIENT

**REPORT NO.: JUL23/033/06**

### SAMPLE DETAILS

| | | | | |
|---|---|---|---|---|
| 1. | Name & Address of Client: Bharat Petroleum Corporation Ltd.<br>Bina Refinery, Village: Agasod, Bina - 470124, Dist: Sagar, Madhya Pradesh, India. | | | |
| 2. | Sample ID: 2148088246 – 033JL23AQ02 | | 3. | Client Representative: Mr. Anil Medhe |
| 4. | Sampling Date: 03.07.2023 | | 5. | Sampling Location: Near Flare Stack (South of Refinery) |
| 6. | Sampling time: 10:30 hr | | 7. | Sampling Duration: 24 Hrs |
| 8. | Analysis commenced on: 10.07.2023 | | 9. | Analysis Completed on: 10.07.2023 |
| 10. | Reporting Date: 26.07.2023 | | 11. | Discipline: Chemical |
| 12. | Sample Collected By: Mr. Jitendra Sinha | | 13. | Group: Atmospheric Pollution |
| 14. | Sampling Procedure: IS Method | | 15. | Product: Ambient Air |
| 16. | Description of Sample: | Sampling Bottles: Sealed √ | Filter Paper: Packed √ | Bladder: Clamped √ |
| 17. | **Environment Condition:** | Temp: Normal / Humidity: Moderate | Wind speed: Smooth | Cloud cover: Partly Cloudy |
| | Rain: No Rain | Wind Direction: Cross wind | Wind blowing from: W | Station category: Industrial |
| 18. | Sample Received Date: 10.07.2023 | | | |

### TEST RESULTS

| S.No | Parameters | Unit (SI) | | Results | Specification/ SPCB Norms | Method Used |
|---|---|---|---|---|---|---|
| 1. | CO | $mg/m^3$ | : | 0.606 | 02 | Gas Chromatography |
| 2. | Benzo (a) Pyrene | $ng/m^3$ | : | <0.5 | 01 | IS 5182 (Part 12): 2004 |

**Remark :**

**Authorized By -**

**Name : Sapana Amin** | **Designation : Lab Incharge**

NOTE:
1] Reports may be reproduced, if required, but only in full and only with written approval of the laboratory.
2] Re analysis of sample will be done, if requested within 7 days from the date of Reporting of sample if the samples are not consumed during analysis.
3) The results reported above relate to the sample identified under Sample Details.

----------END OF REPORT----------

## LABORATORY TEST REPORT - AMBIENT

REPORT NO.: JUL23/033/01 (ULR- TC709923000014619F)

### SAMPLE DETAILS

| | | | | |
|---|---|---|---|---|
| 1. | Name & Address of Client: Bharat Petroleum Corporation Ltd.<br>Bina Refinery, Village: Agasod, Bina - 470124, Dist: Sagar, Madhya Pradesh, India. | | | |
| 2. | Sample ID: 2148088246 – 033JL23AQ01 | | 3. | Client Representative: Mr. Anil Medhe |
| 4. | Sampling Date: 03.07.2023 | | 5. | Sampling Location: Near Canteen (West of Refinery) |
| 6. | Sampling time: 10:00 hr | | 7. | Sampling Duration: 24 Hrs |
| 8. | Analysis commenced on: 10.07.2023 | | 9. | Analysis Completed on: 10.07.2023 |
| 10. | Reporting Date: 26.07.2023 | | 11. | Discipline: Chemical |
| 12. | Sample Collected By: Mr. Jitendra Sinha | | 13. | Group: Atmospheric Pollution |
| 14. | Sampling Procedure: IS Method | | 15. | Product: Ambient Air |
| 16. | Description of Sample: | Sampling Bottles: Sealed √ | Filter Paper: Packed √ | Bladder: Clamped √ |
| 17. | **Environment Condition:** | Temp: Normal / Humidity: Moderate | Wind speed: Smooth | Cloud cover: Partly Cloudy |
| | Rain: No Rain | Wind Direction: Up wind | Wind blowing from: W | Station category: Industrial |
| 18. | Sample Received Date: 10.07.2023 | | | |

### TEST RESULTS

| S.No | Parameters | Unit (SI) | | Results | Specification/ SPCB Norms | Method Used |
|---|---|---|---|---|---|---|
| 1. | $PM_{10}$ | µg /m³ | : | 58 | 100 | IS 5182 (Part 23) : 2006 |
| 2. | $PM_{2.5}$ | µg /m³ | : | 19 | 60 | Guidelines By CPCB(Vol-1) |
| 3. | Sulphur Dioxide ($SO_2$) | µg /m³ | : | 7.74 | 80 | IS 5182 (Part 2 ) :2001 |
| 4. | Nitrogen Oxide ($NO_x$) | µg /m³ | : | 19.23 | 80 | IS 5182 (Part 6 ) :2006 |
| 5. | Ammonia($NH_3$) | µg /m³ | : | N.D. | 400 | NAAQMS Manual by CPCB |
| 6. | Lead (pb) | µg /m³ | : | N.D. | 1 | USEPA(2000)-Method 29 |
| 7. | Arsenic | ng/m³ | : | <5 | 06 | USEPA(2000)-Method 29 |
| 8. | Ozone | µg /m³ | : | <1 | 100 | IS 5182(Part 9): 1974 |
| 9. | Nickel | ng/m³ | : | <1 | 20 | USEPA(2000)-Method 29 |
| 10. | Benzene | µg /m³ | : | <3 | 05 | IS 5182(Part 11): 2006 |

**Remark : N.D.: Not Detected**

**Authorized By -**

**Name : Sapana Amin** | **Designation : Lab Incharge**

NOTE:
1) Reports may be reproduced, if required, but only in full and only with written approval of the laboratory.
2) Re analysis of sample will be done, if requested within 7 days from the date of Reporting of sample if the samples are not consumed during analysis.
3) The results reported above relate to the sample identified under Sample Details.

----------END OF REPORT----------

## LABORATORY TEST REPORT - AMBIENT

**REPORT NO.: JUL23/033/05**

### SAMPLE DETAILS

| | | | | |
|---|---|---|---|---|
| 1. | Name & Address of Client: Bharat Petroleum Corporation Ltd.<br>Bina Refinery, Village: Agasod, Bina - 470124, Dist: Sagar, Madhya Pradesh, India. | | | |
| 2. | Sample ID: 2148088246 – 033JL23AQ01 | | 3. | Client Representative: Mr. Anil Medhe |
| 4. | Sampling Date: 03.07.2023 | | 5. | Sampling Location: Near Canteen (West of Refinery) |
| 6. | Sampling time: 10:00 hr | | 7. | Sampling Duration: 24 Hrs |
| 8. | Analysis commenced on: 10.07.2023 | | 9. | Analysis Completed on: 10.07.2023 |
| 10. | Reporting Date: 26.07.2023 | | 11. | Discipline: Chemical |
| 12. | Sample Collected By: Mr. Jitendra Sinha | | 13. | Group: Atmospheric Pollution |
| 14. | Sampling Procedure: IS Method | | 15. | Product: Ambient Air |
| 16. | Description of Sample: | Sampling Bottles: Sealed √ | Filter Paper: Packed √ | Bladder: Clamped √ |
| 17. | **Environment Condition:** | Temp: Normal / Humidity: Moderate | Wind speed: Smooth | Cloud cover: Partly Cloudy |
| | Rain: No Rain | Wind Direction: Up wind | Wind blowing from: W | Station category: Industrial |
| 18. | Sample Received Date: 10.07.2023 | | | |

### TEST RESULTS

| S.No | Parameters | Unit (SI) | | Results | Specification/ SPCB Norms | Method Used |
|---|---|---|---|---|---|---|
| 1. | CO | $mg/m^3$ | : | 0.732 | 02 | Gas Chromatography |
| 2. | Benzo (a) Pyrene | $ng/m^3$ | : | <0.5 | 01 | IS 5182 (Part 12): 2004 |

**Remark :**

**Authorized By -**

**Name : Sapana Amin** | **Designation : Lab Incharge**

NOTE:
1) Reports may be reproduced, if required, but only in full and only with written approval of the laboratory.
2) Re analysis of sample will be done, if requested within 7 days from the date of Reporting of sample if the samples are not consumed during analysis.
3) The results reported above relate to the sample identified under Sample Details.

----------END OF REPORT----------

## LABORATORY TEST REPORT - AMBIENT

**REPORT NO.: JUL23/033/03 (ULR- TC709923000014621F)**

### SAMPLE DETAILS

| | | | | |
|---|---|---|---|---|
| 1. | Name & Address of Client: Bharat Petroleum Corporation Ltd.<br>Bina Refinery, Village: Agasod, Bina - 470124, Dist: Sagar, Madhya Pradesh, India. | | | |
| 2. | Sample ID: 2148088246 – 033JL23AQ03 | | 3. | Client Representative: Mr. Anil Medhe |
| 4. | Sampling Date: 04.07.2023 | | 5. | Sampling Location: Near BDT (East of Refinery) |
| 6. | Sampling time: 11:00 hr | | 7. | Sampling Duration: 24 Hrs |
| 8. | Analysis commenced on: 10.07.2023 | | 9. | Analysis Completed on: 10.07.2023 |
| 10. | Reporting Date: 26.07.2023 | | 11. | Discipline: Chemical |
| 12. | Sample Collected By: Mr. Jitendra Sinha | | 13. | Group: Atmospheric Pollution |
| 14. | Sampling Procedure: IS Method | | 15. | Product: Ambient Air |
| 16. | Description of Sample: | Sampling Bottles: Sealed √ | Filter Paper: Packed √ | Bladder: Clamped √ |
| 17. | **Environment Condition:** | Temp: Normal / Humidity: Medium | Wind speed: Smooth | Cloud cover: Partly Cloudy |
| | Rain: No Rain | Wind Direction: Down wind | Wind blowing from: W | Station category: Industrial |
| 18. | Sample Received Date: 10.07.2023 | | | |

### TEST RESULTS

| S.No | Parameters | Unit (SI) | | Results | Specification/ SPCB Norms | Method Used |
|---|---|---|---|---|---|---|
| 1. | $PM_{10}$ | µg /m³ | : | 63 | 100 | IS 5182 (Part 23) : 2006 |
| 2. | $PM_{2.5}$ | µg /m³ | : | 21 | 60 | Guidelines By CPCB(Vol-1) |
| 3. | Sulphur Dioxide ($SO_2$) | µg /m³ | : | 8.21 | 80 | IS 5182 (Part 2 ) :2001 |
| 4. | Nitrogen Oxide ($NO_x$) | µg /m³ | : | 20.49 | 80 | IS 5182 (Part 6 ) :2006 |
| 5. | Ammonia($NH_3$) | µg /m³ | : | N.D. | 400 | NAAQMS Manual by CPCB |
| 6. | Lead (pb) | µg /m³ | : | N.D. | 1 | USEPA(2000)-Method 29 |
| 7. | Arsenic | ng/m³ | : | <5 | 06 | USEPA(2000)-Method 29 |
| 8. | Ozone | µg /m³ | : | <1 | 100 | IS 5182(Part 9): 1974 |
| 9. | Nickel | ng/m³ | : | <1 | 20 | USEPA(2000)-Method 29 |
| 10. | Benzene | µg /m³ | : | <3 | 05 | IS 5182(Part 11): 2006 |

**Remark : N.D.: Not Detected**

**Authorized By -**

**Name : Sapana Amin** | **Designation : Lab Incharge**

NOTE:
1) Reports may be reproduced, if required, but only in full and only with written approval of the laboratory.
2) Re analysis of sample will be done, if requested within 7 days from the date of Reporting of sample if the samples are not consumed during analysis.
3) The results reported above relate to the sample identified under Sample Details.

----------**END OF REPORT**----------

## LABORATORY TEST REPORT - AMBIENT

**REPORT NO.: JUL23/033/07**

### SAMPLE DETAILS

| | | | | |
|---|---|---|---|---|
| 1. | Name & Address of Client: Bharat Petroleum Corporation Ltd.<br>Bina Refinery, Village: Agasod, Bina - 470124, Dist: Sagar, Madhya Pradesh, India. | | | |
| 2. | Sample ID: 2148088246 – 033JL23AQ03 | | 3. | Client Representative: Mr. Anil Medhe |
| 4. | Sampling Date: 04.07.2023 | | 5. | Sampling Location: Near BDT (East of Refinery) |
| 6. | Sampling time: 11:00 hr | | 7. | Sampling Duration: 24 Hrs |
| 8. | Analysis commenced on: 10.07.2023 | | 9. | Analysis Completed on: 10.07.2023 |
| 10. | Reporting Date: 26.07.2023 | | 11. | Discipline: Chemical |
| 12. | Sample Collected By: Mr. Jitendra Sinha | | 13. | Group: Atmospheric Pollution |
| 14. | Sampling Procedure: IS Method | | 15. | Product: Ambient Air |
| 16. | Description of Sample: | Sampling Bottles: Sealed √ | Filter Paper: Packed √ | Bladder: Clamped √ |
| 17. | **Environment Condition:** | Temp: Normal / Humidity: Medium | Wind speed: Smooth | Cloud cover: Partly Cloudy |
| | Rain: No Rain | Wind Direction: Down wind | Wind blowing from: W | Station category: Industrial |
| 18. | Sample Received Date: 10.07.2023 | | | |

### TEST RESULTS

| S.No | Parameters | Unit (SI) | | Results | Specification/ SPCB Norms | Method Used |
|---|---|---|---|---|---|---|
| 1. | CO | $mg/m^3$ | : | 0.767 | 02 | Gas Chromatography |
| 2. | Benzo (a) Pyrene | $ng/m^3$ | : | <0.5 | 01 | IS 5182 (Part 12): 2004 |

**Remark :**

**Authorized By -**

**Name : Sapana Amin** | **Designation : Lab Incharge**

NOTE:
1) Reports may be reproduced, if required, but only in full and only with written approval of the laboratory.
2) Re analysis of sample will be done, if requested within 7 days from the date of Reporting of sample if the samples are not consumed during analysis.
3) The results reported above relate to the sample identified under Sample Details.

----------END OF REPORT----------

## LABORATORY TEST REPORT - AMBIENT

REPORT NO.: JUL23/033/04 (ULR- TC709923000014622F)

### SAMPLE DETAILS

| | | | | | |
|---|---|---|---|---|---|
| 1. | Name & Address of Client: Bharat Petroleum Corporation Ltd.<br>Bina Refinery, Village: Agasod, Bina - 470124, Dist: Sagar, Madhya Pradesh, India. | | | | |
| 2. | Sample ID: 2148088246 – 033JL23AQ04 | | 3. | Client Representative: Mr. Anil Medhe | |
| 4. | Sampling Date: 04.07.2023 | | 5. | Sampling Location: Near ETP (North of Refinery) | |
| 6. | Sampling time: 11:30 hr | | 7. | Sampling Duration: 24 Hrs | |
| 8. | Analysis commenced on: 10.07.2023 | | 9. | Analysis Completed on: 10.07.2023 | |
| 10. | Reporting Date: 26.07.2023 | | 11. | Discipline: Chemical | |
| 12. | Sample Collected By: Mr. Jitendra Sinha | | 13. | Group: Atmospheric Pollution | |
| 14. | Sampling Procedure: IS Method | | 15. | Product: Ambient Air | |
| 16. | Description of Sample: | Sampling Bottles: Sealed √ | | Filter Paper: Packed √ | Bladder: Clamped √ |
| 17. | **Environment Condition:** | Temp: Normal | Humidity: Medium | Wind speed: Smooth | Cloud cover: Partly Cloudy |
| | Rain: No Rain | Wind Direction: Cross wind | | Wind blowing from: W | Station category: Industrial |
| 18. | Sample Received Date: 10.07.2023 | | | | |

### TEST RESULTS

| S.No | Parameters | Unit (SI) | | Results | Specification/ SPCB Norms | Method Used |
|---|---|---|---|---|---|---|
| 1. | $PM_{10}$ | µg /m³ | : | 71 | 100 | IS 5182 (Part 23) : 2006 |
| 2. | $PM_{2.5}$ | µg /m³ | : | 24 | 60 | Guidelines By CPCB(Vol-1) |
| 3. | Sulphur Dioxide ($SO_2$) | µg /m³ | : | 10.12 | 80 | IS 5182 (Part 2 ) :2001 |
| 4. | Nitrogen Oxide ($NO_x$) | µg /m³ | : | 18.26 | 80 | IS 5182 (Part 6 ) :2006 |
| 5. | Ammonia($NH_3$) | µg /m³ | : | N.D. | 400 | NAAQMS Manual by CPCB |
| 6. | Lead (pb) | µg /m³ | : | N.D. | 1 | USEPA(2000)-Method 29 |
| 7. | Arsenic | ng/m³ | : | <5 | 06 | USEPA(2000)-Method 29 |
| 8. | Ozone | µg /m³ | : | <1 | 100 | IS 5182(Part 9): 1974 |
| 9. | Nickel | ng/m³ | : | <1 | 20 | USEPA(2000)-Method 29 |
| 10. | Benzene | µg /m³ | : | <3 | 05 | IS 5182(Part 11): 2006 |

**Remark : N.D.: Not Detected**

**Authorized By -**

**Name : Sapana Amin** | **Designation : Lab Incharge**

NOTE:
1) Reports may be reproduced, if required, but only in full and only with written approval of the laboratory.
2) Re analysis of sample will be done, if requested within 7 days from the date of Reporting of sample if the samples are not consumed during analysis.
3) The results reported above relate to the sample identified under Sample Details.

----------END OF REPORT----------

# KADAM ENVIRONMENTAL CONSULTANTS

An ISO 9001-2015 Certified Company (MoEF Approved)

871/B/3, Near Himalaya Machinery, GIDC Makarpura, Vadodara-10.
Phone : (O) 0265 - 6131000, 6131001


## WORK ENVIRONMENT MONITORING REPORT

## LABORATORY TEST REPORT - AMBIENT

**REPORT NO.: JUL23/033/08**

### SAMPLE DETAILS

| | | | | |
|---|---|---|---|---|
| 1. | Name & Address of Client: Bharat Petroleum Corporation Ltd.<br>Bina Refinery, Village: Agasod, Bina - 470124, Dist: Sagar, Madhya Pradesh, India. | | | |
| 2. | Sample ID: 2148088246 – 033JL23AQ04 | | 3. | Client Representative : Mr. Anil Medhe |
| 4. | Sampling Date: 04.07.2023 | | 5. | Sampling Location: Near ETP (North of Refinery) |
| 6. | Sampling time: 11:30 hr | | 7. | Sampling Duration: 24 Hrs |
| 8. | Analysis commenced on: 10.07.2023 | | 9. | Analysis Completed on: 10.07.2023 |
| 10. | Reporting Date: 26.07.2023 | | 11. | Discipline: Chemical |
| 12. | Sample Collected By: Mr. Jitendra Sinha | | 13. | Group: Atmospheric Pollution |
| 14. | Sampling Procedure: IS Method | | 15. | Product: Ambient Air |
| 16. | Description of Sample: | Sampling Bottles: Sealed √ | Filter Paper: Packed √ | Bladder: Clamped √ |
| 17. | **Environment Condition:** | Temp: Normal / Humidity: Medium | Wind speed: Smooth | Cloud cover: Partly Cloudy |
| | Rain: No Rain | Wind Direction: Cross wind | Wind blowing from: W | Station category: Industrial |
| 18. | Sample Received Date: 10.07.2023 | | | |

### TEST RESULTS

| S.No | Parameters | Unit (SI) | | Results | Specification/ SPCB Norms | Method Used |
|---|---|---|---|---|---|---|
| 1. | CO | $mg/m^3$ | : | 0.675 | 02 | Gas Chromatography |
| 2. | Benzo (a) Pyrene | $ng/m^3$ | : | <0.5 | 01 | IS 5182 (Part 12): 2004 |

**Remark :**

**Authorized By :**

**Name : Sapana Amin** | **Designation : Lab Incharge**

NOTE:
1) Reports may be reproduced, if required, but only in full and only with written approval of the laboratory.
2) Re analysis of sample will be done, if requested within 7 days from the date of Reporting of sample if the samples are not consumed during analysis.
3) The results reported above relate to the sample identified under Sample Details.

----------END OF REPORT----------

## LABORATORY TEST REPORT - AMBIENT

REPORT NO.: JUN23/016/36 (ULR- TC709923000013728F)

### SAMPLE DETAILS

| | | | | | |
|---|---|---|---|---|---|
| 1. | Name & Address of Client: Bharat Petroleum Corporation Ltd.<br>Bina Refinery, Village: Agasod, Bina - 470124, Dist: Sagar, Madhya Pradesh, India. | | | | |
| 2. | Sample ID: 2148088246 – 016JN23AQ02 | | 3. | Client Representative: Mr. Anil Medhe | |
| 4. | Sampling Date: 02.06.2023 | | 5. | Sampling Location: Near Flare Stack (South of Refinery) | |
| 6. | Sampling time: 11:00 hr | | 7. | Sampling Duration: 24 Hrs | |
| 8. | Analysis commenced on: 26.06.2023 | | 9. | Analysis Completed on: 28.06.2023 | |
| 10. | Reporting Date: 15.07.2023 | | 11. | Discipline: Chemical | |
| 12. | Sample Collected By: Mr. Jitendra Sinha | | 13. | Group: Atmospheric Pollution | |
| 14. | Sampling Procedure: IS Method | | 15. | Product: Ambient Air | |
| 16. | Description of Sample: | Sampling Bottles: Sealed √ | | Filter Paper: Packed √ | Bladder: Clamped √ |
| 17. | **Environment Condition:** | Temp: Normal | Humidity: Medium | Wind speed: Moderate | Cloud cover: Clear sky |
| | Rain: No Rain | Wind Direction: Cross wind | | Wind blowing from: WSW | Station category: Industrial |
| 18. | Sample Received Date: 26.06.2023 | | | | |

### TEST RESULTS

| S.No | Parameters | Unit (SI) | | Results | Specification/ SPCB Norms | Method Used |
|---|---|---|---|---|---|---|
| 1. | $PM_{10}$ | µg /m³ | : | 65 | 100 | IS 5182 (Part 23) : 2006 |
| 2. | $PM_{2.5}$ | µg /m³ | : | 28 | 60 | Guidelines By CPCB(Vol-1) |
| 3. | Sulphur Dioxide ($SO_2$) | µg /m³ | : | 7.35 | 80 | IS 5182 (Part 2 ) :2001 |
| 4. | Nitrogen Oxide ($NO_x$) | µg /m³ | : | 10.23 | 80 | IS 5182 (Part 6 ) :2006 |
| 5. | Ammonia($NH_3$) | µg /m³ | : | N.D. | 400 | NAAQMS Manual by CPCB |
| 6. | Lead (pb) | µg /m³ | : | N.D. | 1 | USEPA(2000)-Method 29 |
| 7. | Arsenic | ng/m³ | : | <5 | 06 | USEPA(2000)-Method 29 |
| 8. | Ozone | µg /m³ | : | <1 | 100 | IS 5182(Part 9): 1974 |
| 9. | Nickel | ng/m³ | : | <1 | 20 | USEPA(2000)-Method 29 |
| 10. | Benzene | µg /m³ | : | <3 | 05 | IS 5182(Part 11): 2006 |

**Remark : N.D.: Not Detected**

**Authorized By -**

**Name : Sapana Amin** | **Designation : Lab Incharge**

NOTE:
1) Reports may be reproduced, if required, but only in full and only with written approval of the laboratory.
2) Re analysis of sample will be done, if requested within 7 days from the date of Reporting of sample if the samples are not consumed during analysis.
3) The results reported above relate to the sample identified under Sample Details.

----------END OF REPORT----------

## LABORATORY TEST REPORT - AMBIENT

**REPORT NO.: JUN23/016/44**

### SAMPLE DETAILS

| | | | | | |
|---|---|---|---|---|---|
| 1. | Name & Address of Client: Bharat Petroleum Corporation Ltd.<br>Bina Refinery, Village: Agasod, Bina - 470124, Dist: Sagar, Madhya Pradesh, India. | | | | |
| 2. | Sample ID: 2148088246 – 016JN23AQ02 | | 3. | Client Representative: Mr. Anil Medhe | |
| 4. | Sampling Date: 02.06.2023 | | 5. | Sampling Location: Near Flare Stack (South of Refinery) | |
| 6. | Sampling time: 11:00 hr | | 7. | Sampling Duration: 24 Hrs | |
| 8. | Analysis commenced on: 26.06.2023 | | 9. | Analysis Completed on: 28.06.2023 | |
| 10. | Reporting Date: 15.07.2023 | | 11. | Discipline: Chemical | |
| 12. | Sample Collected By: Mr. Jitendra Sinha | | 13. | Group: Atmospheric Pollution | |
| 14. | Sampling Procedure: IS Method | | 15. | Product: Ambient Air | |
| 16. | Description of Sample: | Sampling Bottles: Sealed √ | | Filter Paper: Packed √ | Bladder: Clamped √ |
| 17. | **Environment Condition:** | Temp: Normal | Humidity: Medium | Wind speed: Moderate | Cloud cover: Clear sky |
| | Rain: No Rain | Wind Direction: Cross wind | | Wind blowing from: WSW | Station category: Industrial |
| 18. | Sample Received Date: 26.06.2023 | | | | |

### TEST RESULTS

| S.No | Parameters | Unit (SI) | | Results | Specification/ SPCB Norms | Method Used |
|---|---|---|---|---|---|---|
| 1. | CO | $mg/m^3$ | : | 0.583 | 02 | Gas Chromatography |
| 2. | Benzo (a) Pyrene | $ng/m^1$ | : | <0.5 | 01 | IS 5182 (Part 12): 2004 |

**Remark :**

**Authorized By -**

**Name : Sapana Amin** | **Designation : Lab Incharge**

NOTE:
1) Reports may be reproduced, if required, but only in full and only with written approval of the laboratory.
2) Re analysis of sample will be done, if requested within 7 days from the date of Reporting of sample if the samples are not consumed during analysis.
3) The results reported above relate to the sample identified under Sample Details.

----------**END OF REPORT**----------

## LABORATORY TEST REPORT - AMBIENT

**REPORT NO.: JUN23/016/35 (ULR- TC709923000013727F)**

### SAMPLE DETAILS

| | | | |
|---|---|---|---|
| 1. | Name & Address of Client: Bharat Petroleum Corporation Ltd.<br>Bina Refinery, Village: Agasod, Bina - 470124, Dist: Sagar, Madhya Pradesh, India. | | |
| 2. | Sample ID: 2148088246 – 016JN23AQ01 | 3. | Client Representative: Mr. Anil Medhe |
| 4. | Sampling Date: 01.06.2023 | 5. | Sampling Location: Near Canteen (West of Refinery) |
| 6. | Sampling time: 10:00 hr | 7. | Sampling Duration: 24 Hrs |
| 8. | Analysis commenced on: 26.06.2023 | 9. | Analysis Completed on: 28.06.2023 |
| 10. | Reporting Date: 15.07.2023 | 11. | Discipline: Chemical |
| 12. | Sample Collected By: Mr. Jitendra Sinha | 13. | Group: Atmospheric Pollution |
| 14. | Sampling Procedure: IS Method | 15. | Product: Ambient Air |
| 16. | Description of Sample: | Sampling Bottles: Sealed √ | Filter Paper: Packed √ / Bladder: Clamped √ |
| 17. | **Environment Condition:** | Temp: Normal / Humidity: Medium | Wind speed: Moderate / Cloud cover: Clear sky |
| | Rain: No Rain | Wind Direction: Up wind | Wind blowing from: WSW / Station category: Industrial |
| 18. | Sample Received Date: 26.06.2023 | | |

### TEST RESULTS

| S.No | Parameters | Unit (SI) | | Results | Specification/ SPCB Norms | Method Used |
|---|---|---|---|---|---|---|
| 1. | $PM_{10}$ | µg /m³ | : | 65 | 100 | IS 5182 (Part 23) : 2006 |
| 2. | $PM_{2.5}$ | µg /m³ | : | 31 | 60 | Guidelines By CPCB(Vol-1) |
| 3. | Sulphur Dioxide ($SO_2$) | µg /m³ | : | 6.91 | 80 | IS 5182 (Part 2 ) :2001 |
| 4. | Nitrogen Oxide ($NO_x$) | µg /m³ | : | 10.17 | 80 | IS 5182 (Part 6 ) :2006 |
| 5. | Ammonia($NH_3$) | µg /m³ | : | N.D. | 400 | NAAQMS Manual by CPCB |
| 6. | Lead (pb) | µg /m³ | : | N.D. | 1 | USEPA(2000)-Method 29 |
| 7. | Arsenic | ng/m³ | : | <5 | 06 | USEPA(2000)-Method 29 |
| 8. | Ozone | µg /m³ | : | <1 | 100 | IS 5182(Part 9): 1974 |
| 9. | Nickel | ng/m³ | : | <1 | 20 | USEPA(2000)-Method 29 |
| 10. | Benzene | µg /m³ | : | <3 | 05 | IS 5182(Part 11): 2006 |

**Remark : N.D.: Not Detected**

**Authorized By -**

**Name : Sapana Amin** | **Designation : Lab Incharge**

NOTE:
1) Reports may be reproduced, if required, but only in full and only with written approval of the laboratory.
2) Re analysis of sample will be done, if requested within 7 days from the date of Reporting of sample if the samples are not consumed during analysis.
3) The results reported above relate to the sample identified under Sample Details.

----------END OF REPORT----------

# KADAM ENVIRONMENTAL CONSULTANTS

An ISO 9001-2015 Certified Company (MoEF Approved)

871/B/3, Near Himalaya Machinery, GIDC Makarpura, Vadodara-10.
Phone : (O) 0265 - 6131000, 6131001


## ENVIRONMENTAL MONITORING REPORT

### LABORATORY TEST REPORT - AMBIENT

REPORT NO.: JUN23/016/43

### SAMPLE DETAILS

| | | | | |
|---|---|---|---|---|
| 1. | Name & Address of Client: Bharat Petroleum Corporation Ltd.<br>Bina Refinery, Village: Agasod, Bina - 470124, Dist: Sagar, Madhya Pradesh, India. | | | |
| 2. | Sample ID: 2148088246 – 016JN23AQ01 | | 3. | Client Representative: Mr. Anil Medhe |
| 4. | Sampling Date: 01.06.2023 | | 5. | Sampling Location: Near Canteen (West of Refinery) |
| 6. | Sampling time: 10:00 hr | | 7. | Sampling Duration: 24 Hrs |
| 8. | Analysis commenced on: 26.06.2023 | | 9. | Analysis Completed on: 28.06.2023 |
| 10. | Reporting Date: 15.07.2023 | | 11. | Discipline: Chemical |
| 12. | Sample Collected By: Mr. Jitendra Sinha | | 13. | Group: Atmospheric Pollution |
| 14. | Sampling Procedure: IS Method | | 15. | Product: Ambient Air |
| 16. | Description of Sample: | Sampling Bottles: Sealed √ | Filter Paper: Packed √ | Bladder: Clamped √ |
| 17. | **Environment Condition:** | Temp: Normal / Humidity: Medium | Wind speed: Moderate | Cloud cover: Clear sky |
| | Rain: No Rain | Wind Direction: Up wind | Wind blowing from: WSW | Station category: Industrial |
| 18. | Sample Received Date: 26.06.2023 | | | |

### TEST RESULTS

| S.No | Parameters | Unit (SI) | | Results | Specification/ SPCB Norms | Method Used |
|---|---|---|---|---|---|---|
| 1. | CO | $mg/m^3$ | : | 0.778 | 02 | Gas Chromatography |
| 2. | Benzo (a) Pyrene | $ng/m^3$ | : | <0.5 | 01 | IS 5182 (Part 12): 2004 |

**Remark :**

**Authorized By -**

**Name : Sapana Amin** **Designation : Lab Incharge**

NOTE:
1) Reports may be reproduced, if required, but only in full and only with written approval of the laboratory.
2) Re analysis of sample will be done, if requested within 7 days from the date of Reporting of sample if the samples are not consumed during analysis.
3) The results reported above relate to the sample identified under Sample Details.

----------END OF REPORT----------

# KADAM ENVIRONMENTAL CONSULTANTS

An ISO 9001-2015 Certified Company (MoEF Approved)

871/B/3, Near Himalaya Machinery, GIDC Makarpura, Vadodara-10.
Phone : (O) 0265 - 6131000, 6131001


## ENVIRONMENTAL MONITORING REPORT

### LABORATORY TEST REPORT - AMBIENT

**REPORT NO.: JUN23/016/45**

### SAMPLE DETAILS

| | | | | |
|---|---|---|---|---|
| 1. | Name & Address of Client: Bharat Petroleum Corporation Ltd.<br>Bina Refinery, Village: Agasod, Bina - 470124, Dist: Sagar, Madhya Pradesh, India. | | | |
| 2. | Sample ID: 2148088246 – 016JN23AQ03 | | 3. | Client Representative: Mr. Anil Medhe |
| 4. | Sampling Date: 05.06.2023 | | 5. | Sampling Location: Near BDT (East of Refinery) |
| 6. | Sampling time: 12:00 hr | | 7. | Sampling Duration: 24 Hrs |
| 8. | Analysis commenced on: 26.06.2023 | | 9. | Analysis Completed on: 28.06.2023 |
| 10. | Reporting Date: 15.07.2023 | | 11. | Discipline: Chemical |
| 12. | Sample Collected By: Mr. Jitendra Sinha | | 13. | Group: Atmospheric Pollution |
| 14. | Sampling Procedure: IS Method | | 15. | Product: Ambient Air |
| 16. | Description of Sample: | Sampling Bottles: Sealed √ | Filter Paper: Packed √ | Bladder: Clamped √ |
| 17. | **Environment Condition:** | Temp: Normal / Humidity: Medium | Wind speed: Moderate | Cloud cover: Clear sky |
| | Rain: No Rain | Wind Direction: Down wind | Wind blowing from: WSW | Station category: Industrial |
| 18. | Sample Received Date: 26.06.2023 | | | |

### TEST RESULTS

| S.No | Parameters | Unit (SI) | | Results | Specification/ SPCB Norms | Method Used |
|---|---|---|---|---|---|---|
| 1. | CO | $mg/m^3$ | : | 0.652 | 02 | Gas Chromatography |
| 2. | Benzo (a) Pyrene | $ng/m^3$ | : | <0.5 | 01 | IS 5182 (Part 12): 2004 |

**Remark :**

**Authorized By -**

**Name : Sapana Amin** | **Designation : Lab Incharge**

NOTE:
1) Reports may be reproduced, if required, but only in full and only with written approval of the laboratory.
2) Re analysis of sample will be done, if requested within 7 days from the date of Reporting of sample if the samples are not consumed during analysis.
3) The results reported above relate to the sample identified under Sample Details.

----------END OF REPORT----------

## LABORATORY TEST REPORT - AMBIENT

**REPORT NO.: JUN23/016/37 (ULR- TC709923000013729F)**

### SAMPLE DETAILS

| | | | | |
|---|---|---|---|---|
| 1. | Name & Address of Client: Bharat Petroleum Corporation Ltd.<br>Bina Refinery, Village: Agasod, Bina - 470124, Dist: Sagar, Madhya Pradesh, India. | | | |
| 2. | Sample ID: 2148088246 – 016JN23AQ03 | | 3. | Client Representative: Mr. Anil Medhe |
| 4. | Sampling Date: 05.06.2023 | | 5. | Sampling Location: Near BDT (East of Refinery) |
| 6. | Sampling time: 12:00 hr | | 7. | Sampling Duration: 24 Hrs |
| 8. | Analysis commenced on: 26.06.2023 | | 9. | Analysis Completed on: 28.06.2023 |
| 10. | Reporting Date: 15.07.2023 | | 11. | Discipline: Chemical |
| 12. | Sample Collected By: Mr. Jitendra Sinha | | 13. | Group: Atmospheric Pollution |
| 14. | Sampling Procedure: IS Method | | 15. | Product: Ambient Air |
| 16. | Description of Sample: | Sampling Bottles: Sealed √ | Filter Paper: Packed √ | Bladder: Clamped √ |
| 17. | **Environment Condition:** | Temp: Normal / Humidity: Medium | Wind speed: Moderate | Cloud cover: Clear sky |
| | Rain: No Rain | Wind Direction: Down wind | Wind blowing from: WSW | Station category: Industrial |
| 18. | Sample Received Date: 26.06.2023 | | | |

### TEST RESULTS

| S.No | Parameters | Unit (SI) | | Results | Specification/ SPCB Norms | Method Used |
|---|---|---|---|---|---|---|
| 1. | $PM_{10}$ | µg /m³ | : | 55 | 100 | IS 5182 (Part 23) : 2006 |
| 2. | $PM_{2.5}$ | µg /m³ | : | 22 | 60 | Guidelines By CPCB(Vol-1) |
| 3. | Sulphur Dioxide ($SO_2$) | µg /m³ | : | 6.05 | 80 | IS 5182 (Part 2 ) :2001 |
| 4. | Nitrogen Oxide ($NO_x$) | µg /m³ | : | 9.28 | 80 | IS 5182 (Part 6 ) :2006 |
| 5. | Ammonia($NH_3$) | µg /m³ | : | N.D. | 400 | NAAQMS Manual by CPCB |
| 6. | Lead (pb) | µg /m³ | : | N.D. | 1 | USEPA(2000)-Method 29 |
| 7. | Arsenic | ng/m³ | : | <5 | 06 | USEPA(2000)-Method 29 |
| 8. | Ozone | µg /m³ | : | <1 | 100 | IS 5182(Part 9): 1974 |
| 9. | Nickel | ng/m³ | : | <1 | 20 | USEPA(2000)-Method 29 |
| 10. | Benzene | µg /m³ | : | <3 | 05 | IS 5182(Part 11): 2006 |

**Remark : N.D.: Not Detected**

**Authorized By -**

**Name : Sapana Amin** | **Designation : Lab Incharge**

NOTE:
1] Reports may be reproduced, if required, but only in full and only with written approval of the laboratory.
2] Re analysis of sample will be done, if requested within 7 days from the date of Reporting of sample if the samples are not consumed during analysis.
3] The results reported above relate to the sample identified under Sample Details.

----------END OF REPORT----------

## LABORATORY TEST REPORT - AMBIENT

REPORT NO.: JUN23/016/38 (ULR- TC709923000013730F)

### SAMPLE DETAILS

| | | | | |
|---|---|---|---|---|
| 1. | Name & Address of Client: Bharat Petroleum Corporation Ltd.<br>Bina Refinery, Village: Agasod, Bina - 470124, Dist: Sagar, Madhya Pradesh, India. | | | |
| 2. | Sample ID: 2148088246 – 016JN23AQ04 | | 3. | Client Representative: Mr. Anil Medhe |
| 4. | Sampling Date: 06.06.2023 | | 5. | Sampling Location: Near ETP (North of Refinery) |
| 6. | Sampling time: 13:00 hr | | 7. | Sampling Duration: 24 Hrs |
| 8. | Analysis commenced on: 26.06.2023 | | 9. | Analysis Completed on: 28.06.2023 |
| 10. | Reporting Date: 15.07.2023 | | 11. | Discipline: Chemical |
| 12. | Sample Collected By: Mr. Jitendra Sinha | | 13. | Group: Atmospheric Pollution |
| 14. | Sampling Procedure: IS Method | | 15. | Product: Ambient Air |
| 16. | Description of Sample: | Sampling Bottles: Sealed √ | Filter Paper: Packed √ | Bladder: Clamped √ |
| 17. | **Environment Condition:** | Temp: Normal / Humidity: Medium | Wind speed: Moderate | Cloud cover: Clear sky |
| | Rain: No Rain | Wind Direction: Down wind | Wind blowing from: WSW | Station category: Industrial |
| 18. | Sample Received Date: 26.06.2023 | | | |

### TEST RESULTS

| S.No | Parameters | Unit (SI) | | Results | Specification/ SPCB Norms | Method Used |
|---|---|---|---|---|---|---|
| 1. | $PM_{10}$ | µg /m³ | : | 63 | 100 | IS 5182 (Part 23) : 2006 |
| 2. | $PM_{2.5}$ | µg /m³ | : | 26 | 60 | Guidelines By CPCB(Vol-1) |
| 3. | Sulphur Dioxide ($SO_2$) | µg /m³ | : | 6.48 | 80 | IS 5182 (Part 2 ) :2001 |
| 4. | Nitrogen Oxide ($NO_x$) | µg /m³ | : | 9.71 | 80 | IS 5182 (Part 6 ) :2006 |
| 5. | Ammonia($NH_3$) | µg /m³ | : | N.D. | 400 | NAAQMS Manual by CPCB |
| 6. | Lead (pb) | µg /m³ | : | N.D. | 1 | USEPA(2000)-Method 29 |
| 7. | Arsenic | ng/m³ | : | <5 | 06 | USEPA(2000)-Method 29 |
| 8. | Ozone | µg /m³ | : | <1 | 100 | IS 5182(Part 9): 1974 |
| 9. | Nickel | ng/m³ | : | <1 | 20 | USEPA(2000)-Method 29 |
| 10. | Benzene | µg /m³ | : | <3 | 05 | IS 5182(Part 11): 2006 |

**Remark : N.D.: Not Detected**

**Authorized By -**

**Name : Sapana Amin** | **Designation : Lab Incharge**

NOTE:
1) Reports may be reproduced, if required, but only in full and only with written approval of the laboratory.
2) Re analysis of sample will be done, if requested within 7 days from the date of Reporting of sample if the samples are not consumed during analysis.
3) The results reported above relate to the sample identified under Sample Details.

----------END OF REPORT----------

# KADAM ENVIRONMENTAL CONSULTANTS

An ISO 9001-2015 Certified Company (MoEF Approved)

871/B/3, Near Himalaya Machinery, GIDC Makarpura, Vadodara-10.
Phone : (O) 0265 - 6131000, 6131001


## ENVIRONMENTAL MONITORING REPORT

### LABORATORY TEST REPORT - AMBIENT

**REPORT NO.: JUN23/016/46**

### SAMPLE DETAILS

| | | | | | |
|---|---|---|---|---|---|
| 1. | Name & Address of Client: Bharat Petroleum Corporation Ltd.<br>Bina Refinery, Village: Agasod, Bina - 470124, Dist: Sagar, Madhya Pradesh, India. | | | | |
| 2. | Sample ID: 2148088246 – 016JN23AQ04 | | 3. | Client Representative : Mr. Anil Medhe | |
| 4. | Sampling Date: 06.06.2023 | | 5. | Sampling Location: Near ETP (North of Refinery) | |
| 6. | Sampling time: 13:00 hr | | 7. | Sampling Duration: 24 Hrs | |
| 8. | Analysis commenced on: 26.06.2023 | | 9. | Analysis Completed on: 28.06.2023 | |
| 10. | Reporting Date: 15.07.2023 | | 11. | Discipline: Chemical | |
| 12. | Sample Collected By: Mr. Jitendra Sinha | | 13. | Group: Atmospheric Pollution | |
| 14. | Sampling Procedure: IS Method | | 15. | Product: Ambient Air | |
| 16. | Description of Sample: | Sampling Bottles: Sealed √ | | Filter Paper: Packed √ | Bladder: Clamped √ |
| 17. | **Environment Condition:** | Temp: Normal | Humidity: Medium | Wind speed: Moderate | Cloud cover: Clear sky |
| | Rain: No Rain | Wind Direction: Down wind | | Wind blowing from: WSW | Station category: Industrial |
| 18. | Sample Received Date: 26.06.2023 | | | | |

### TEST RESULTS

| S.No | Parameters | Unit (SI) | | Results | Specification/ SPCB Norms | Method Used |
|---|---|---|---|---|---|---|
| 1. | CO | $mg/m^3$ | : | 0.561 | 02 | Gas Chromatography |
| 2. | Benzo (a) Pyrene | $ng/m^3$ | : | <0.5 | 01 | IS 5182 (Part 12): 2004 |
| **Remark :** | | | | | | |
| **Authorized By -** | | | | | | |
| **Name : Sapana Amin** | | | | **Designation : Lab Incharge** | | |

NOTE:
1) Reports may be reproduced, if required, but only in full and only with written approval of the laboratory.
2) Re analysis of sample will be done, if requested within 7 days from the date of Reporting of sample if the samples are not consumed during analysis.
3) The results reported above relate to the sample identified under Sample Details.

----------**END OF REPORT**----------

## LABORATORY TEST REPORT - STACK EMMISION

**REPORT NO.: OCT23/016/01 (ULR- TC709923000021273F)**

### SAMPLE DETAILS

| | | | |
|---|---|---|---|
| 1. | Name & Address of Client: Bharat Petroleum Corporation Ltd.<br>Bina Refinery, Village: Agasod, Bina - 470124, Dist: Sagar, Madhya Pradesh, India. | | |
| 2. | Sample ID: 2148088246-016OC23SE01 | 3. | Client Representative: Mr. Anil Medhe |
| 4. | Sample Date: 06.10.2023 | 5. | Sampling Location: CDU/VDU |
| 6. | Sampling Time: 16:20 hr | 7. | Sampling Duration: 42 Mins |
| 8. | Analysis commenced on: 16.10.2023 | 9. | Analysis Completed on: 16.10.2023 |
| 10. | Reporting Date: 01.11.2023 | 11. | Discipline: Chemical |
| 12. | Sample Collected By: Mr. Jitendra Sinha | 13. | Group: Atmospheric Pollution |
| 14. | Sampling Procedure: IS: 11255 Method | 15. | Product: Stack Emission |
| 16. | Description of Sample: | Sampling Bottles: Sealed √ | Thimble: Packed √ / Bladder: Clamped √ |
| 17. | Sample Received Date: 16.10.2023 | | |

### STACK DETAILS

| S.No. | Parameters | Unit (SI) | | Description |
|---|---|---|---|---|
| 1. | Source | | : | **CDU/VDU (Common Stack for Crude and Vacuum Heaters)** |
| 2. | Height | m | : | 100 (From Ground level) |
| 3. | Diameter | m | : | 4.45 |
| 4. | Temperature | °c | : | 283 |
| 5. | Velocity | m/s | : | 13.88 |
| 6. | Type of fuel used | | : | Fuel Oil +Fuel Gas |
| 7. | Quantity of fuel used | Kg/hr | : | 2906.49 (F.Oil) + 6701.19 (F.Gas) |
| 8. | Gas Flow rate | $Nm^3/hr.$ | : | 416671.4 |

| S.No. | Parameters | Unit | | Results | Specification/ SPCB Norms | Method Used |
|---|---|---|---|---|---|---|
| 1. | Particulate Matter | $mg/Nm^3$ | : | 7 | 17 | IS 11255 (Part 1) : 1985 |
| 2. | Sulphur Dioxide($SO_2$) | $mg/Nm^3$ | : | 25.55 | 265 | IS 11255 (Part 2) : 1985 |
| 3. | Oxides of Nitrogen (NOx) | $mg/Nm^3$ | : | 103.32 | 277 | IS 11255 (Part 7) : 2005 |
| 4. | CO | $mg/Nm^3$ | : | 11.36 | 113 | IS 11255 (Part 3): 2008 |
| 5. | Nickel | $mg/Nm^3$ | : | N.D. | 5 | USEPA(2000)-Method 29 |
| 6. | $H_2S$ | $mg/Nm^3$ | : | N.D. | N.A. | IS 11255 (Part-4): 2006 |

Remark:(1) Flow Rate for PM - 21 LPM (2) Flow Rate for Gaseous sampling – 2 LPM (3) Calorific Value in Kcal/kg (i) F.Oil–10264(ii)F.Gas -12077 (4) The Specification is computed based on the heat supplied by Gas & Liquid Fuels. N.D. - Not Detected.

**Authorized By :-**

**Name : Bhavisha Pandya** | **Designation : Sr.Chemist**

NOTE:
1) Reports may be reproduced, if required, but only in full and only with written approval of the laboratory.
2) Re analysis of sample will be done, if requested within 7 days from the date of Reporting of sample if the samples are not consumed during analysis.
3) The results reported above relate to the sample identified under Sample Details.

----------END OF REPORT----------

# KADAM ENVIRONMENTAL CONSULTANTS

An ISO 9001-2015 Certified Company (MoEF Approved)

871/B/3, Near Himalaya Machinery, GIDC Makarpura, Vadodara-10.
Phone : (O) 0265 - 6131000, 6131001


## ENVIRONMENTAL MONITORING REPORT

### LABORATORY TEST REPORT - STACK EMMISION

**REPORT NO.: OCT23/016/16**

**SAMPLE DETAILS**

| | | | |
|---|---|---|---|
| 1. | Name & Address of Client: Bharat Petroleum Corporation Ltd. Bina Refinery, Village: Agasod, Bina - 470124, Dist: Sagar, Madhya Pradesh, India. | | |
| 2. | Sample ID: 2148088246-016OC23SE01 | 3. | Client Representative: Mr. Anil Medhe |
| 4. | Sample Date: 06.10.2023 | 5. | Sampling Location: CDU/VDU |
| 6. | Sampling Time: 16:20 hr | 7. | Sampling Duration: 42 Mins |
| 8. | Analysis commenced on: 16.10.2023 | 9. | Analysis Completed on: 16.10.2023 |
| 10. | Reporting Date: 01.11.2023 | 11. | Discipline: Chemical |
| 12. | Sample Collected By: Mr. Jitendra Sinha | 13. | Group: Atmospheric Pollution |
| 14. | Sampling Procedure: IS: 11255 Method | 15. | Product: Stack Emission |
| 16. | Description of Sample: Sampling Bottles: Sealed √ | Thimble:Packed√ | Bladder : Clamped √ |
| 17. | Sample Received Date: 16.10.2023 | | |

**STACK DETAILS**

| S.No. | Parameters | Unit (SI) | | Description |
|---|---|---|---|---|
| 1. | Source | | : | **CDU/VDU (Common Stack for Crude and Vacuum Heaters)** |
| 2. | Height | m | : | 100 (From Ground level) |
| 3. | Diameter | m | : | 4.45 |
| 4. | Temperature | °c | : | 283 |
| 5. | Velocity | m/s | : | 13.88 |
| 6. | Type of fuel used | | : | Fuel Oil +Fuel Gas |
| 7. | Quantity of fuel used | Kg/hr | : | 2906.49 (F.Oil) + 6701.19 (F.Gas) |
| 8. | Gas Flow rate | $Nm^3/hr.$ | : | 416671.4 |

| S.No. | Parameters | Unit | | Results | Specification / SPCB Norms | Method Used |
|---|---|---|---|---|---|---|
| 1. | Vanadium | $mg/Nm^3$ | : | N.D. | 5 | APHA 23rd Edition 3500-V B |

Remark:(1) Flow Rate for PM - 21 LPM (2) Flow Rate for Gaseous sampling – 2 LPM (3) Calorific Value in Kcal/kg (i) F.Oil-10264(ii)F.Gas -12077 (4) The Specification is prompted based on the heat supplied by Gas & Liquid Fuels. **N.D. - Not Detected.**

**Authorized By -**

**Name : Bhavisha Pandya** | **Designation : Sr.Chemist**

NOTE:
1) Reports may be reproduced, if required, but only in full and only with written approval of the laboratory.
2) Re analysis of sample will be done, if requested within 7 days from the date of Reporting of sample if the samples are not consumed during analysis.
3) The results reported above relate to the sample identified under Sample Details.

----------**END OF REPORT**----------

## LABORATORY TEST REPORT - STACK EMMISION

**REPORT NO.: OCT23/016/05 (ULR- TC709923000021277F)**

### SAMPLE DETAILS

| | | | |
|---|---|---|---|
| 1. | Name & Address of Client: Bharat Petroleum Corporation Ltd.<br>Bina Refinery, Village: Agasod, Bina - 470124, Dist: Sagar, Madhya Pradesh, India. | | |
| 2. | Sample ID: 2148088246-016OC23SE05 | 3. | Client Representative: Mr. Anil Medhe |
| 4. | Sample Date: 05.10.2023 | 5. | Sampling Location: MS Block (Hot Oil Heater) |
| 6. | Sampling Time: 12:30 hr | 7. | Sampling Duration: 44 Mins |
| 8. | Analysis commenced on: 16.10.2023 | 9. | Analysis Completed on: 16.10.2023 |
| 10. | Reporting Date: 01.11.2023 | 11. | Discipline: Chemical |
| 12. | Sample Collected By: Mr. Jitendra Sinha | 13. | Group: Atmospheric Pollution |
| 14. | Sampling Procedure: IS: 11255 Method | 15. | Product: Stack Emission |
| 16. | Description of Sample: Sampling Bottles: Sealed √ | Thimble:Packed√ | Bladder: Clamped √ |
| 17. | Sample Received Date: 16.10.2023 | | |

### STACK DETAILS

| S.No. | Parameters | Unit (SI) | | Description |
|---|---|---|---|---|
| 1. | Source | | : | **MS Block (Hot Oil Heater)** |
| 2. | Height | m | : | 60 (From Ground Level) |
| 3. | Diameter | m | : | 2.6 |
| 4. | Temperature | °c | : | 204 |
| 5. | Velocity | m/s | : | 13.51 |
| 6. | Type of fuel used | | : | Fuel Oil +Fuel Gas |
| 7. | Quantity of fuel used | Kg/hr | : | 0.0 (F.Oil) + 1666.332 (F.Gas) |
| 8. | Gas Flow rate | $Nm^3$/hr. | : | 161375.1 |

| S.No. | Parameters | Unit | | Results | Specification/ SPCB Norms | Method Used |
|---|---|---|---|---|---|---|
| 1. | Particulate Matter | $mg/Nm^3$ | : | 3 | 5 | IS 11255 (Part 1) : 1985 |
| 2. | Sulphur Dioxide($SO_2$) | $mg/Nm^3$ | : | 12.55 | 50 | IS 11255 (Part 2) : 1985 |
| 3. | Oxides of Nitrogen (NOx) | $mg/Nm^3$ | : | 50.95 | 250 | IS 11255 (Part 7) : 2005 |
| 4. | CO | $mg/Nm^3$ | : | 7.60 | 100 | IS 11255 (Part 3): 2008 |
| 5. | Nickel | $mg/Nm^3$ | : | N.D. | 5 | USEPA(2000)-Method 29 |
| 6. | $H_2S$ | $mg/Nm^3$ | : | N.D. | N.A. | IS 11255 (Part-4): 2006 |

Remark:(1) Flow Rate for PM – 18 LPM (2) Flow Rate for Gaseous sampling – 2 LPM (3) Calorific Value in Kcal/kg (i) F.Oil – 10264(i)F.Gas - 12077 (4) The Specification is computed based on the heat supplied by Gas & Liquid Fuels. N.D. - Not Detected.

**Authorized By -**

**Name : Bhavisha Pandya** | **Designation : Sr.Chemist**

NOTE:
1) Reports may be reproduced, if required, but only in full and only with written approval of the laboratory.
2) Re analysis of sample will be done, if requested within 7 days from the date of Reporting of sample if the samples are not consumed during analysis.
3) The results reported above relate to the sample identified under Sample Details.

----------END OF REPORT----------

# KADAM ENVIRONMENTAL CONSULTANTS

An ISO 9001-2015 Certified Company (MoEF Approved)

871/B/3, Near Himalaya Machinery, GIDC Makarpura, Vadodara-10.
Phone : (O) 0265 - 6131000, 6131001


## ENVIRONMENTAL MONITORING REPORT

### LABORATORY TEST REPORT - STACK EMMISION

**REPORT NO.: OCT23/016/20**

**SAMPLE DETAILS**

| | | | |
|---|---|---|---|
| 1. | Name & Address of Client: Bharat Petroleum Corporation Ltd. Bina Refinery, Village: Agasod, Bina - 470124, Dist: Sagar, Madhya Pradesh, India. | | |
| 2. | Sample ID: 2148088246–016OC23SE05 | 3. | Client Representative: Mr. Anil Medhe |
| 4. | Sample Date: 05.10.2023 | 5. | Sampling Location: MS Block (Hot Oil Heater) |
| 6. | Sampling Time: 12:30 hr | 7. | Sampling Duration: 44 Mins |
| 8. | Analysis commenced on: 16.10.2023 | 9. | Analysis Completed on: 16.10.2023 |
| 10. | Reporting Date: 01.11.2023 | 11. | Discipline: Chemical |
| 12. | Sample Collected By: Mr. Jitendra Sinha | 13. | Group: Atmospheric Pollution |
| 14. | Sampling Procedure: IS: 11255 Method | 15. | Product: Stack Emission |
| 16. | Description of Sample: Sampling Bottles: Sealed √ | Thimble:Packed√ | Bladder: Clamped √ |
| 17. | Sample Received Date: 16.10.2023 | | |

**STACK DETAILS**

| S.No. | Parameters | Unit (SI) | | Description |
|---|---|---|---|---|
| 1. | Source | | : | **MS Block (Hot Oil Heater)** |
| 2. | Height | m | : | 60 (From Ground Level) |
| 3. | Diameter | m | : | 2.6 |
| 4. | Temperature | °c | : | 204 |
| 5. | Velocity | m/s | : | 13.51 |
| 6. | Type of fuel used | | : | Fuel Oil +Fuel Gas |
| 7. | Quantity of fuel used | Kg/hr | : | 0.0 (F.Oil) + 1666.332 (F.Gas) |
| 8. | Gas Flow rate | $Nm^3$/hr. | : | 161375.1 |

| S.No. | Parameters | Unit | | Results | Specification/ SPCB Norms | Method Used |
|---|---|---|---|---|---|---|
| 1. | Vanadium | $mg/Nm^3$ | : | N.D. | 5 | APHA 23rd Edition 3500-V B |

Remark:(1) Flow Rate for PM - 18 LPM (2) Flow Rate for Gaseous sampling – 2 LPM (3) Calorific Value in Kcal/kg (i) F.Oil – 10264(ii)F.Gas - 12077 (4) The Specification is computed based on the heat supplied by Gas & Liquid Fuels. **N.D. - Not Detected.**

**Authorized By -**

**Name : Bhavisha Pandya** | **Designation : Sr.Chemist**

NOTE:
1) Reports may be reproduced, if required, but only in full and only with written approval of the laboratory.
2) Re analysis of sample will be done, if requested within 7 days from the date of Reporting of sample if the samples are not consumed during analysis.
3) The results reported above relate to the sample identified under Sample Details.

----------END OF REPORT----------

## LABORATORY TEST REPORT - STACK EMMISION

**REPORT NO.: OCT23/016/06 (ULR- TC709923000021278F)**

### SAMPLE DETAILS

| | | | |
|---|---|---|---|
| 1. | Name & Address of Client: Bharat Petroleum Corporation Ltd.<br>Bina Refinery, Village: Agasod, Bina - 470124, Dist: Sagar, Madhya Pradesh, India. | | |
| 2. | Sample ID: 2148088246-016OC23SE06 | 3. | Client Representative: Mr. Anil Medhe |
| 4. | Sample Date: 04.10.2023 | 5. | Sampling Location: MS Block (NHT-CCR Common Stack) |
| 6. | Sampling Time: 11:40 hr | 7. | Sampling Duration: 46 Mins |
| 8. | Analysis commenced on: 16.10.2023 | 9. | Analysis Completed on: 16.10.2023 |
| 10. | Reporting Date: 01.11.2023 | 11. | Discipline: Chemical |
| 12. | Sample Collected By: Mr. Jitendra Sinha | 13. | Group: Atmospheric Pollution |
| 14. | Sampling Procedure: IS: 11255 Method | 15. | Product: Stack Emission |
| 16. | Description of Sample: Sampling Bottles: Sealed √ | Thimble:Packed√ | Bladder: Clamped √ |
| 17. | Sample Received Date: 16.10.2023 | | |

### STACK DETAILS

| S.No. | Parameters | Unit (SI) | | Description |
|---|---|---|---|---|
| 1. | Source | | : | **MS Block (NHT-CCR Common Stack)** |
| 2. | Height | m | : | 60 (from Ground Level) |
| 3. | Diameter | m | : | 3.2 |
| 4. | Temperature | °c | : | 250 |
| 5. | Velocity | m/s | : | 12.91 |
| 6. | Type of fuel used | | : | Fuel Oil +Fuel Gas |
| 7. | Quantity of fuel used | Kg/hr | : | 0.0 (F.Oil) + 4928.94 (F.Gas) |
| 8. | Gas Flow rate | $Nm^3/hr.$ | : | 213043.4 |

| S.No. | Parameters | Unit | | Results | Specification/ SPCB Norms | Method Used |
|---|---|---|---|---|---|---|
| 1. | Particulate Matter | $mg/Nm^3$ | : | 4 | 5 | IS 11255 (Part 1) : 1985 |
| 2. | Sulphur Dioxide($SO_2$) | $mg/Nm^3$ | : | 15.36 | 50 | IS 11255 (Part 2) : 1985 |
| 3. | Oxides of Nitrogen (NOx) | $mg/Nm^3$ | : | 143.12 | 250 | IS 11255 (Part 7) : 2005 |
| 4. | CO | $mg/Nm^3$ | : | 4.04 | 100 | IS 11255 (Part 3): 2008 |
| 5. | Nickel | $mg/Nm^3$ | : | N.D. | 5 | USEPA(2000)-Method 29 |
| 6. | $H_2S$ | $mg/Nm^3$ | : | N.D. | N.A. | IS 11255 (Part-4): 2006 |

Remark:(1) Flow Rate for PM – 21 LPM (2) Flow Rate for Gaseous sampling – 2 LPM (3) Calorific Value in Kcal/kg (i) F.Oil – 10264(ii)F.Gas - 12077 (4) The Specification is computed based on the heat supplied by Gas & Liquid Fuels. N.D. - Not Detected.

**Authorized By :**

**Name : Bhavisha Pandya** **Designation : Sr.Chemist**

NOTE: 1) Reports may be reproduced, if required, but only in full and only with written approval of the laboratory.
2) Re analysis of sample will be done, if requested within 7 days from the date of Reporting of sample if the samples are not consumed during analysis.
3) The results reported above relate to the sample identified under Sample Details.

----------END OF REPORT----------

# KADAM ENVIRONMENTAL CONSULTANTS

An ISO 9001-2015 Certified Company (MoEF Approved)

871/B/3, Near Himalaya Machinery, GIDC Makarpura, Vadodara-10.
Phone : (O) 0265 - 6131000, 6131001


## ENVIRONMENTAL MONITORING REPORT

### LABORATORY TEST REPORT - STACK EMMISION

**REPORT NO.: OCT23/016/21**

**SAMPLE DETAILS**

| | | | |
|---|---|---|---|
| 1. | Name & Address of Client: Bharat Petroleum Corporation Ltd. Bina Refinery, Village: Agasod, Bina - 470124, Dist: Sagar, Madhya Pradesh, India. | | |
| 2. | Sample ID: 2148088246-016OC23SE06 | 3. | Client Representative: Mr. Anil Medhe |
| 4. | Sample Date: 04.10.2023 | 5. | Sampling Location: MS Block (NHT-CCR Common Stack) |
| 6. | Sampling Time: 11:40 hr | 7. | Sampling Duration: 46 Mins |
| 8. | Analysis commenced on: 16.10.2023 | 9. | Analysis Completed on: 16.10.2023 |
| 10. | Reporting Date: 01.11.2023 | 11. | Discipline: Chemical |
| 12. | Sample Collected By: Mr. Jitendra Sinha | 13. | Group: Atmospheric Pollution |
| 14. | Sampling Procedure: IS: 11255 Method | 15. | Product: Stack Emission |
| 16. | Description of Sample: Sampling Bottles: Sealed √ | Thimble:Packed√ | Bladder: Clamped √ |
| 17. | Sample Received Date: 16.10.2023 | | |

**STACK DETAILS**

| S.No. | Parameters | Unit (SI) | | Description |
|---|---|---|---|---|
| 1. | Source | | : | **MS Block (NHT-CCR Common Stack)** |
| 2. | Height | m | : | 60 (from Ground Level) |
| 3. | Diameter | m | : | 3.2 |
| 4. | Temperature | °c | : | 250 |
| 5. | Velocity | m/s | : | 12.91 |
| 6. | Type of fuel used | | : | Fuel Oil +Fuel Gas |
| 7. | Quantity of fuel used | Kg/hr | : | 0.0 (F.Oil) + 4928.94 (F.Gas) |
| 8. | Gas Flow rate | $Nm^3/hr.$ | : | 213043.4 |

| S.No. | Parameters | Unit | | Results | Specification/ SPCB Norms | Method Used |
|---|---|---|---|---|---|---|
| 1. | Vanadium | $mg/Nm^3$ | : | N.D. | 5 | APHA 23rd Edition 3500-V B |

Remark:(1) Flow Rate for RM – 21 LPM (2) Flow Rate for Gaseous sampling – 2 LPM (3) Calorific Value in Kcal/kg (i) F.Oil – 10264(ii)F.Gas - 12077 (4) The Specification is computed based on the heat supplied by Gas & Liquid Fuels. **N.D. - Not Detected.**

**Authorized By :-**

**Name : Bhavisha Pandya** | **Designation : Sr.Chemist**

NOTE:
1) Reports may be reproduced, if required, but only in full and only with written approval of the laboratory.
2) Re analysis of sample will be done, if requested within 7 days from the date of Reporting of sample if the samples are not consumed during analysis.
3) The results reported above relate to the sample identified under Sample Details.

----------END OF REPORT----------

## LABORATORY TEST REPORT - STACK EMMISION

**REPORT NO.: OCT23/016/08 (ULR- TC709923000021280F)**

### SAMPLE DETAILS

| | | | |
|---|---|---|---|
| 1. | Name & Address of Client: Bharat Petroleum Corporation Ltd.<br>Bina Refinery, Village: Agasod, Bina - 470124, Dist: Sagar, Madhya Pradesh, India. | | |
| 2. | Sample ID: 2148088246-016OC23SE08 | 3. | Client Representative: Mr. Anil Medhe |
| 4. | Sample Date: 04.10.2023 | 5. | Sampling Location: MS Block (CCR Auxiliary) 1 & 2 Inter Heater |
| 6. | Sampling Time: 13:10 hr | 7. | Sampling Duration: 48 Mins |
| 8. | Analysis commenced on: 16.10.2023 | 9. | Analysis Completed on: 16.10.2023 |
| 10. | Reporting Date: 01.11.2023 | 11. | Discipline: Chemical |
| 12. | Sample Collected By: Mr. Jitendra Sinha | 13. | Group: Atmospheric Pollution |
| 14. | Sampling Procedure: IS: 11255 Method | 15. | Product: Stack Emission |
| 16. | Description of Sample: Sampling Bottles: Sealed √ | Thimble:Packed√ | Bladder: Clamped √ |
| 17. | Sample Received Date: 16.10.2023 | | |

### STACK DETAILS

| S.No. | Parameters | Unit (SI) | | Description |
|---|---|---|---|---|
| 1. | Source | | : | **MS Block (CCR Auxiliary) 1 & 2 Inter Heater** |
| 2. | Height | m | : | 65 |
| 3. | Diameter | m | : | 1.65 |
| 4. | Temperature | °c | : | 192 |
| 5. | Velocity | m/s | : | 12.18 |
| 6. | Type of fuel used | | : | Fuel Oil + Fuel Gas |
| 7. | Quantity of fuel used | Kg/hr | : | 0.0 (F.Oil) + 517.08 (F.Gas) |
| 8. | Gas Flow rate | $Nm^3/hr.$ | : | 60107.0 |

| S.No. | Parameters | Unit | | Results | Specification/ SPCB Norms | Method Used |
|---|---|---|---|---|---|---|
| 1. | Particulate Matter | $mg/Nm^3$ | : | 3 | 5 | IS 11255 (Part 1) : 1985 |
| 2. | Sulphur Dioxide($SO_2$) | $mg/Nm^3$ | : | 10.28 | 50 | IS 11255 (Part 2) : 1985 |
| 3. | Oxides of Nitrogen (NOx) | $mg/Nm^3$ | : | 194.30 | 250 | IS 11255 (Part 7) : 2005 |
| 4. | CO | $mg/Nm^3$ | : | 5.04 | 100 | IS 11255 (Part 3): 2008 |
| 5. | Nickel | $mg/Nm^3$ | : | N.D. | N.A. | USEPA(2000)-Method 29 |
| 6. | $H_2S$ | $mg/Nm^3$ | : | N.D. | N.A. | IS 11255 (Part-4): 2006 |

Remark:(1) Flow Rate for PM – 21 LPM (2) Flow Rate for Gaseous sampling – 2 LPM (3) Calorific Value in Kcal/kg (i) F.Oil – 10264(ii)F.Gas - 12077 (4) The Specification is computed based on the heat supplied by Gas & Liquid Fuels. N.D. - Not Detected.

**Authorized By -**

**Name : Bhavisha Pandya** | **Designation : Sr.Chemist**

NOTE:
1) Reports may be reproduced, if required, but only in full and only with written approval of the laboratory.
2) Re analysis of sample will be done, if requested within 7 days from the date of Reporting of sample if the samples are not consumed during analysis.
3) The results reported above relate to the sample identified under Sample Details.

----------END OF REPORT----------

# KADAM ENVIRONMENTAL CONSULTANTS

An ISO 9001-2015 Certified Company (MoEF Approved)

871/B/3, Near Himalaya Machinery, GIDC Makarpura, Vadodara-10.
Phone : (O) 0265 - 6131000, 6131001


## ENVIRONMENTAL MONITORING REPORT

### LABORATORY TEST REPORT - STACK EMMISION

REPORT NO.: OCT23/016/23

### SAMPLE DETAILS

| | | | |
|---|---|---|---|
| 1. | Name & Address of Client: Bharat Petroleum Corporation Ltd. Bina Refinery, Village: Agasod, Bina - 470124, Dist: Sagar, Madhya Pradesh, India. | | |
| 2. | Sample ID: 2148088246–016OC23SE08 | 3. | Client Representative: Mr. Anil Medhe |
| 4. | Sample Date: 04.10.2023 | 5. | Sampling Location: MS Block (CCR Auxiliary) 1 & 2 Inter Heater |
| 6. | Sampling Time: 13:10 hr | 7. | Sampling Duration: 48 Mins |
| 8. | Analysis commenced on: 16.10.2023 | 9. | Analysis Completed on: 16.10.2023 |
| 10. | Reporting Date: 01.11.2023 | 11. | Discipline: Chemical |
| 12. | Sample Collected By: Mr. Jitendra Sinha | 13. | Group: Atmospheric Pollution |
| 14. | Sampling Procedure: IS: 11255 Method | 15. | Product: Stack Emission |
| 16. | Description of Sample: Sampling Bottles: Sealed √ | Thimble:Packed√ | Bladder: Clamped √ |
| 17. | Sample Received Date: 16.10.2023 | | |

### STACK DETAILS

| S.No. | Parameters | Unit (SI) | | Description |
|---|---|---|---|---|
| 1. | Source | | : | **MS Block (CCR Auxilary) 1 & 2 Inter Heater** |
| 2. | Height | m | : | 65 |
| 3. | Diameter | m | : | 1.65 |
| 4. | Temperature | °c | : | 192 |
| 5. | Velocity | m/s | : | 12.18 |
| 6. | Type of fuel used | | : | Fuel Oil +Fuel Gas |
| 7. | Quantity of fuel used | Kg/hr | : | 0.0 (F.Oil) + 517.08 (F.Gas) |
| 8. | Gas Flow rate | $Nm^3/hr.$ | : | 60107.0 |

| S.No. | Parameters | Unit | | Results | Specification/ SPCB Norms | Method Used |
|---|---|---|---|---|---|---|
| 1. | Vanadium | $mg/Nm^3$ | : | N.D. | 5 | APHA 23rd Edition 3500-V B |

Remark:(1) Flow Rate for PM – 21 LPM (2) Flow Rate for Gaseous sampling – 2 LPM (3) Calorific Value in Kcal/kg (i) F.Oil – 10264(ii)F.Gas - 12077 (4) The Specification is computed based on the heat supplied by Gas & Liquid Fuels. **N.D. - Not Detected.**

**Authorized By -**

**Name : Bhavisha Pandya** | **Designation : Sr.Chemist**

NOTE:
1) Reports may be reproduced, if required, but only in full and only with written approval of the laboratory.
2) Re analysis of sample will be done, if requested within 7 days from the date of Reporting of sample if the samples are not consumed during analysis.
3) The results reported above relate to the sample identified under Sample Details.

----------END OF REPORT----------

## LABORATORY TEST REPORT - STACK EMMISION

REPORT NO.: OCT23/016/07 (ULR- TC709923000021279F)

### SAMPLE DETAILS

| | | | |
|---|---|---|---|
| 1. | Name & Address of Client: Bharat Petroleum Corporation Ltd.<br>Bina Refinery, Village: Agasod, Bina - 470124, Dist: Sagar, Madhya Pradesh, India. | | |
| 2. | Sample ID: 2148088246-016OC23SE07 | 3. | Client Representative: Mr. Anil Medhe |
| 4. | Sample Date: 05.10.2023 | 5. | Sampling Location: MS Block (NHT Auxiliary) Heater |
| 6. | Sampling Time: 11:10 hr | 7. | Sampling Duration: 46 Mins |
| 8. | Analysis commenced on: 16.10.2023 | 9. | Analysis Completed on: 16.10.2023 |
| 10. | Reporting Date: 01.11.2023 | 11. | Discipline: Chemical |
| 12. | Sample Collected By: Mr. Jitendra Sinha | 13. | Group: Atmospheric Pollution |
| 14. | Sampling Procedure: IS: 11255 Method | 15. | Product: Stack Emission |
| 16. | Description of Sample: Sampling Bottles: Sealed √ | Thimble: Packed √ | Bladder: Clamped √ |
| 17. | Sample Received Date: 16.10.2023 | | |

### STACK DETAILS

| S.No. | Parameters | Unit (SI) | | Description |
|---|---|---|---|---|
| 1. | Source | | : | **MS Block (NHT Auxiliary) Heater** |
| 2. | Height | m | : | 60 |
| 3. | Diameter | m | : | 1.75 |
| 4. | Temperature | °c | : | 207 |
| 5. | Velocity | m/s | : | 12.68 |
| 6. | Type of fuel used | | : | Fuel Oil +Fuel Gas |
| 7. | Quantity of fuel used | Kg/hr | : | 0.0 (F.Oil) + 383.64 (F.Gas) |
| 8. | Gas Flow rate | $Nm^3$/hr. | : | 68181.3 |

| S.No. | Parameters | Unit | | Results | Specification/ SPCB Norms | Method Used |
|---|---|---|---|---|---|---|
| 1. | Particulate Matter | $mg/Nm^3$ | : | 3 | 5 | IS 11255 (Part 1) : 1985 |
| 2. | Sulphur Dioxide($SO_2$) | $mg/Nm^3$ | : | 8.06 | 50 | IS 11255 (Part 2) : 1985 |
| 3. | Oxides of Nitrogen (NOx) | $mg/Nm^3$ | : | 108.58 | 250 | IS 11255 (Part 7) : 2005 |
| 4. | CO | $mg/Nm^3$ | : | 4.49 | 100 | IS 11255 (Part 3): 2008 |
| 5. | Nickel | $mg/Nm^3$ | : | N.D. | N.A. | USEPA(2000)-Method 29 |
| 6. | $H_2S$ | $mg/Nm^3$ | : | N.D. | N.A. | IS 11255 (Part-4): 2006 |

Remark:(1) Flow Rate for PM – 21 LPM (2) Flow Rate for Gaseous sampling – 2 LPM (3) Calorific Value in Kcal/kg (i) F.Oil – 10264(ii)F.Gas - 12077 (4) The Specification is computed based on the heat supplied by Gas & Liquid Fuels. N.D. - Not Detected.

**Authorized By -**

**Name : Bhavisha Pandya** | **Designation : Sr.Chemist**

NOTE: 1) Reports may be reproduced, if required, but only in full and only with written approval of the laboratory.
2) Re analysis of sample will be done, if requested within 7 days from the date of Reporting of sample if the samples are not consumed during analysis.
3) The results reported above relate to the sample identified under Sample Details.

----------END OF REPORT----------

# KADAM ENVIRONMENTAL CONSULTANTS

An ISO 9001-2015 Certified Company (MoEF Approved)

871/B/3, Near Himalaya Machinery, GIDC Makarpura, Vadodara-10.
Phone : (O) 0265 - 6131000, 6131001


## ENVIRONMENTAL MONITORING REPORT

### LABORATORY TEST REPORT - STACK EMMISION

**REPORT NO.: OCT23/016/22**

**SAMPLE DETAILS**

| | | | |
|---|---|---|---|
| 1. | Name & Address of Client: Bharat Petroleum Corporation Ltd. Bina Refinery, Village: Agasod, Bina - 470124, Dist: Sagar, Madhya Pradesh, India. | | |
| 2. | Sample ID: 2148088246-016OC23SE07 | 3. | Client Representative: Mr. Anil Medhe |
| 4. | Sample Date: 05.10.2023 | 5. | Sampling Location: MS Block (NHT Auxiliary) Heater |
| 6. | Sampling Time: 11:10 hr | 7. | Sampling Duration: 46 Mins |
| 8. | Analysis commenced on: 16.10.2023 | 9. | Analysis Completed on: 16.10.2023 |
| 10. | Reporting Date: 01.11.2023 | 11. | Discipline: Chemical |
| 12. | Sample Collected By: Mr. Jitendra Sinha | 13. | Group: Atmospheric Pollution |
| 14. | Sampling Procedure: IS: 11255 Method | 15. | Product: Stack Emission |
| 16. | Description of Sample: Sampling Bottles: Sealed √ | Thimble:Packed√ | Bladder: Clamped √ |
| 17. | Sample Received Date: 16.10.2023 | | |

**STACK DETAILS**

| S.No. | Parameters | Unit (SI) | | Description |
|---|---|---|---|---|
| 1. | Source | | : | **MS Block (NHT Auxiliary) Heater** |
| 2. | Height | m | : | 60 |
| 3. | Diameter | m | : | 1.75 |
| 4. | Temperature | °c | : | 207 |
| 5. | Velocity | m/s | : | 12.68 |
| 6. | Type of fuel used | | : | Fuel Oil +Fuel Gas |
| 7. | Quantity of fuel used | Kg/hr | : | 0.0 (F.Oil) + 383.64 (F.Gas) |
| 8. | Gas Flow rate | $Nm^3/hr.$ | : | 68181.3 |

| S.No. | Parameters | Unit | | Results | Specification/ SPCB Norms | Method Used |
|---|---|---|---|---|---|---|
| 1. | Vanadium | $mg/Nm^3$ | : | N.D. | 5 | APHA 23rd Edition 3500-V B |

Remark:(1) Flow Rate for PM – 21 LPM (2) Flow Rate for Gaseous sampling – 2 LPM (3) Calorific Value in Kcal/kg (i) F.Oil – 10264(ii)F.Gas - 12077 (4) The Specification is computed based on the heat supplied by Gas & Liquid Fuels. **N.D. - Not Detected.**

**Authorized By -**

**Name : Bhavisha Pandya** | **Designation : Sr.Chemist**

NOTE:
1) Reports may be reproduced, if required, but only in full and only with written approval of the laboratory.
2) Re analysis of sample will be done, if requested within 7 days from the date of Reporting of sample if the samples are not consumed during analysis.
3) The results reported above relate to the sample identified under Sample Details.

----------**END OF REPORT**----------

## LABORATORY TEST REPORT - STACK EMMISION

**REPORT NO.: OCT23/016/04 (ULR- TC709923000021276F)**

### SAMPLE DETAILS

| | | | |
|---|---|---|---|
| 1. | Name & Address of Client: Bharat Petroleum Corporation Ltd.<br>Bina Refinery, Village: Agasod, Bina - 470124, Dist: Sagar, Madhya Pradesh, India. | | |
| 2. | Sample ID: 2148088246-016OC23SE04 | 3. | Client Representative: Mr. Anil Medhe |
| 4. | Sample Date: 10.10.2023 | 5. | Sampling Location: HCU |
| 6. | Sampling Time: 14:50 hr | 7. | Sampling Duration: 44 Mins |
| 8. | Analysis commenced on: 16.10.2023 | 9. | Analysis Completed on: 16.10.2023 |
| 10. | Reporting Date: 01.11.2023 | 11. | Discipline: Chemical |
| 12. | Sample Collected By: Mr. Jitendra Sinha | 13. | Group: Atmospheric Pollution |
| 14. | Sampling Procedure: IS: 11255 Method | 15. | Product: Stack Emission |
| 16. | Description of Sample: Sampling Bottles: Sealed √ | Thimble:Packed √ | Bladder: Clamped √ |
| 17. | Sample Received Date: 16.10.2023 | | |

### STACK DETAILS

| S.No. | Parameters | Unit (SI) | | Description |
|---|---|---|---|---|
| 1. | Source | | : | **HCU (Common Stack)** |
| 2. | Height | m | : | 100 (From Ground Level) |
| 3. | Diameter | m | : | 2.34 |
| 4. | Temperature | °c | : | 260 |
| 5. | Velocity | m/s | : | 13.44 |
| 6. | Type of fuel used | | : | Fuel Oil +Fuel Gas |
| 7. | Quantity of fuel used | Kg/hr | : | 462.87 (F.Oil) + 5254.2 (F.Gas) |
| 8. | Gas Flow rate | $Nm^3$/hr. | : | 116369.7 |

| S.No. | Parameters | Unit | | Results | Specification/ SPCB Norms | Method Used |
|---|---|---|---|---|---|---|
| 1. | Particulate Matter | $mg/Nm^3$ | : | 7 | 8 | IS 11255 (Part 1) : 1985 |
| 2. | Sulphur Dioxide($SO_2$) | $mg/Nm^3$ | : | 100.53 | 106 | IS 11255 (Part 2) : 1985 |
| 3. | Oxides of Nitrogen (NOx) | $mg/Nm^3$ | : | 160.62 | 257 | IS 11255 (Part 7) : 2005 |
| 4. | CO | $mg/Nm^3$ | : | 14.17 | 103 | IS 11255 (Part 3): 2008 |
| 5. | Nickel | $mg/Nm^3$ | : | N.D. | 5 | USEPA(2000)-Method 29 |
| 6. | $H_2S$ | $mg/Nm^3$ | : | N.D. | N.A. | IS 11255 (Part-4): 2006 |

Remark:(1) Flow Rate for PM - 20 LPM (2) Flow Rate for Gaseous sampling – 2 LPM (3) Calorific Value in Kcal/kg (i) F.Oil – 10264(ii)F.Gas - 12077 (4) The Specification is computed based on the heat supplied by Gas & Liquid Fuels. N.D. - Not Detected.

**Authorized By -**

**Name : Bhavisha Pandya** | **Designation : Sr.Chemist**

NOTE: 1) Reports may be reproduced, if required, but only in full and only with written approval of the laboratory.
2) Re analysis of sample will be done, if requested within 7 days from the date of Reporting of sample if the samples are not consumed during analysis.
3) The results reported above relate to the sample identified under Sample Details.

----------END OF REPORT----------

## LABORATORY TEST REPORT - STACK EMMISION

**REPORT NO.: OCT23/016/19**

### SAMPLE DETAILS

| | | | | |
|---|---|---|---|---|
| 1. | Name & Address of Client: Bharat Petroleum Corporation Ltd. Bina Refinery, Village: Agasod, Bina - 470124, Dist: Sagar, Madhya Pradesh, India. | | | |
| 2. | Sample ID: 2148088246-016OC23SE04 | 3. | Client Representative: Mr. Anil Medhe | |
| 4. | Sample Date: 10.10.2023 | 5. | Sampling Location: HCU | |
| 6. | Sampling Time: 14:50 hr | 7. | Sampling Duration: 44 Mins | |
| 8. | Analysis commenced on: 16.10.2023 | 9. | Analysis Completed on: 16.10.2023 | |
| 10. | Reporting Date: 01.11.2023 | 11. | Discipline: Chemical | |
| 12. | Sample Collected By: Mr. Jitendra Sinha | 13. | Group: Atmospheric Pollution | |
| 14. | Sampling Procedure: IS: 11255 Method | 15. | Product: Stack Emission | |
| 16. | Description of Sample: | Sampling Bottles: Sealed √ | Thimble:Packed√ | Bladder: Clamped √ |
| 17. | Sample Received Date: 16.10.2023 | | | |

### STACK DETAILS

| S.No. | Parameters | Unit (SI) | | Description |
|---|---|---|---|---|
| 1. | Source | | : | **HCU (Common Stack)** |
| 2. | Height | m | : | 100 (From Ground Level) |
| 3. | Diameter | m | : | 2.34 |
| 4. | Temperature | °c | : | 260 |
| 5. | Velocity | m/s | : | 13.44 |
| 6. | Type of fuel used | | : | Fuel Oil +Fuel Gas |
| 7. | Quantity of fuel used | Kg/hr | : | 462.87 (F.Oil) + 5254.2 (F.Gas) |
| 8. | Gas Flow rate | $Nm^3/hr.$ | : | 116369.7 |

| S.No. | Parameters | Unit | | Results | Specification/ SPCB Norms | Method Used |
|---|---|---|---|---|---|---|
| 1. | Vanadium | $mg/Nm^3$ | : | N.D. | 5 | APHA 23rd Edition 3500-V B |

Remark:(1) Flow Rate for PM – 20 LPM (2) Flow Rate for Gaseous sampling – 2 LPM (3) Calorific Value in Kcal/kg (i) F.Oil – 10264(i)F.Gas - 12077 (4) The Specification is computed based on the heat supplied by Gas & Liquid Fuels. **N.D. - Not Detected.**

**Authorized By -**

**Name : Bhavisha Pandya** | **Designation : Sr.Chemist**

NOTE:
1) Reports may be reproduced, if required, but only in full and only with written approval of the laboratory.
2) Re analysis of sample will be done, if requested within 7 days from the date of Reporting of sample if the samples are not consumed during analysis.
3) The results reported above relate to the sample identified under Sample Details.

----------**END OF REPORT**----------

## LABORATORY TEST REPORT - STACK EMMISION

**REPORT NO.: OCT23/016/03 (ULR- TC709923000021275F)**

### SAMPLE DETAILS

| | | | |
|---|---|---|---|
| 1. | Name & Address of Client: Bharat Petroleum Corporation Ltd. Bina Refinery, Village: Agasod, Bina - 470124, Dist: Sagar, Madhya Pradesh, India. | | |
| 2. | Sample ID: 2148088246-016OC23SE03 | 3. | Client Representative: Mr. Anil Medhe |
| 4. | Sample Date: 05.10.2023 | 5. | Sampling Location: HGU |
| 6. | Sampling Time: 16:10 hr | 7. | Sampling Duration: 46 mins |
| 8. | Analysis commenced on: 16.10.2023 | 9. | Analysis Completed on: 16.10.2023 |
| 10. | Reporting Date: 01.11.2023 | 11. | Discipline: Chemical |
| 12. | Sample Collected By: Mr. Jitendra Sinha | 13. | Group: Atmospheric Pollution |
| 14. | Sampling Procedure: IS: 11255 Method | 15. | Product: Stack Emission |
| 16. | Description of Sample: | Sampling Bottles: Sealed √ | Thimble:Packed√ / Bladder: Clamped √ |
| 17. | Sample Received Date: 16.10.2023 | | |

### STACK DETAILS

| S.No. | Parameters | Unit (SI) | | Description |
|---|---|---|---|---|
| 1. | Source | | : | HGU |
| 2. | Height | m | : | 70 (From Ground Level) |
| 3. | Diameter | m | : | 3.1 |
| 4. | Temperature | °c | : | 198 |
| 5. | Velocity | m/s | : | 12.70 |
| 6. | Type of fuel used | | : | Naphtha + Purge Gas |
| 7. | Quantity of fuel used | Kg/hr | : | 7526.85 (N) + 19908 (P.Gas) |
| 8. | Gas Flow rate | $Nm^3/hr.$ | : | 218395.9 |

| S.No. | Parameters | Unit | | Results | Specification/ SPCB Norms | Method Used |
|---|---|---|---|---|---|---|
| 1. | Particulate Matter | $mg/Nm^3$ | : | 9 | 42 | IS 11255 (Part 1) : 1985 |
| 2. | Sulphur Dioxide($SO_2$) | $mg/Nm^3$ | : | 19.76 | 702 | IS 11255 (Part 2) : 1985 |
| 3. | Oxides of Nitrogen (NOx) | $mg/Nm^3$ | : | 95.38 | 331 | IS 11255 (Part 7) : 2005 |
| 4. | CO | $mg/Nm^3$ | : | 3.52 | 141 | IS 11255 (Part 3): 2008 |
| 5. | Nickel | $mg/Nm^3$ | : | N.D. | 5 | USEPA(2000)-Method 29 |
| 6. | $H_2S$ | $mg/Nm^3$ | : | N.D. | N.A. | IS 11255 (Part-4): 2006 |

Remark:(1) Flow Rate for PM - 25 LPM (2) Flow Rate for Gaseous sampling – 2 LPM (3) Calorific Value in Kcal/kg (i) Naptha –10647 (ii)P.Gas -1290 (4) The Specification is computed based on the heat supplied by Gas & Liquid Fuels. N.D. - Not Detected.

**Authorized By -**

**Name : Bhavisha Pandya** | **Designation : Sr.Chemist**

NOTE:
1) Reports may be reproduced, if required, but only in full and only with written approval of the laboratory.
2) Re analysis of sample will be done, if requested within 7 days from the date of Reporting of sample if the samples are not consumed during analysis.
3) The results reported above relate to the sample identified under Sample Details.

----------END OF REPORT----------

# KADAM ENVIRONMENTAL CONSULTANTS

An ISO 9001-2015 Certified Company (MoEF Approved)

871/B/3, Near Himalaya Machinery, GIDC Makarpura, Vadodara-10.
Phone : (O) 0265 - 6131000, 6131001


## ENVIRONMENTAL MONITORING REPORT

### LABORATORY TEST REPORT - STACK EMMISION

**REPORT NO.: OCT23/016/18**

### SAMPLE DETAILS

| | | | |
|---|---|---|---|
| 1. | Name & Address of Client: Bharat Petroleum Corporation Ltd. Bina Refinery, Village: Agasod, Bina - 470124, Dist: Sagar, Madhya Pradesh, India. | | |
| 2. | Sample ID: 2148088246-016OC23SE03 | 3. | Client Representative: Mr. Anil Medhe |
| 4. | Sample Date: 05.10.2023 | 5. | Sampling Location: HGU |
| 6. | Sampling Time: 16:10 hr | 7. | Sampling Duration: 46 mins |
| 8. | Analysis commenced on: 16.10.2023 | 9. | Analysis Completed on: 16.10.2023 |
| 10. | Reporting Date: 01.11.2023 | 11. | Discipline: Chemical |
| 12. | Sample Collected By: Mr. Jitendra Sinha | 13. | Group: Atmospheric Pollution |
| 14. | Sampling Procedure: IS: 11255 Method | 15. | Product: Stack Emission |
| 16. | Description of Sample: Sampling Bottles: Sealed √ | Thimble:Packed√ | Bladder: Clamped √ |
| 17. | Sample Received Date: 16.10.2023 | | |

### STACK DETAILS

| S.No. | Parameters | Unit (SI) | | Description |
|---|---|---|---|---|
| 1. | Source | | : | HGU |
| 2. | Height | m | : | 70 (From Ground Level) |
| 3. | Diameter | m | : | 3.1 |
| 4. | Temperature | °c | : | 198 |
| 5. | Velocity | m/s | : | 12.70 |
| 6. | Type of fuel used | | : | Naphtha + Purge Gas + Fuel Gas |
| 7. | Quantity of fuel used | Kg/hr | : | 7526.85 (N) + 19908 (P.Gas) |
| 8. | Gas Flow rate | $Nm^3/hr.$ | : | 218395.9 |

| S.No. | Parameters | Unit | | Results | Specification/ SPCB Norms | Method Used |
|---|---|---|---|---|---|---|
| 1. | Vanadium | $mg/Nm^3$ | : | N.D. | 5 | APHA 23rd Edition 3500-V B |

Remark:(1) Flow Rate for PM – 25 LPM (2) Flow Rate for Gaseous sampling – 2 LPM (3) Calorific Value in Kcal/kg (i) Naptha –10647 (ii)P.Gas -1290 (4) The Specification is computed based on the heat supplied by Gas & Liquid Fuels. **N.D. - Not Detected.**

**Authorized By -**

**Name : Bhavisha Pandya** | **Designation : Sr.Chemist**

NOTE:
1) Reports may be reproduced, if required, but only in full and only with written approval of the laboratory.
2) Re analysis of sample will be done, if requested within 7 days from the date of Reporting of sample if the samples are not consumed during analysis.
3) The results reported above relate to the sample identified under Sample Details.

----------END OF REPORT----------

## LABORATORY TEST REPORT - STACK EMMISION

**REPORT NO.: OCT23/016/02 (ULR- TC709923000021274F)**

### SAMPLE DETAILS

| | | | |
|---|---|---|---|
| 1. | Name & Address of Client: Bharat Petroleum Corporation Ltd. Bina Refinery, Village: Agasod, Bina - 470124, Dist: Sagar, Madhya Pradesh, India. | | |
| 2. | Sample ID: 2148088246-016OC23SE02 | 3. | Client Representative: Mr. Anil Medhe |
| 4. | Sample Date: 06.10.2023 | 5. | Sampling Location: DCU |
| 6. | Sampling Time: 15:00 hr | 7. | Sampling Duration: 48 Mins |
| 8. | Analysis commenced on: 16.10.2023 | 9. | Analysis Completed on: 16.10.2023 |
| 10. | Reporting Date: 01.11.2023 | 11. | Discipline: Chemical |
| 12. | Sample Collected By: Mr. Jitendra Sinha | 13. | Group: Atmospheric Pollution |
| 14. | Sampling Procedure: IS: 11255 Method | 15. | Product: Stack Emission |
| 16. | Description of Sample: Sampling Bottles: Sealed √ | Thimble:Packed√ | Bladder: Clamped √ |
| 17. | Sample Received Date: 16.10.2023 | | |

### STACK DETAILS

| S.No. | Parameters | Unit (SI) | | Description |
|---|---|---|---|---|
| 1. | Source | | : | **DCU (Common Stack for Coker Feed Heaters A&B)** |
| 2. | Height | M | : | 60 (From Ground level) |
| 3. | Diameter | m | : | 2.18 |
| 4. | Temperature | °c | : | 185 |
| 5. | Velocity | m/s | : | 12.46 |
| 6. | Type of fuel used | | : | Fuel Oil + Fuel Gas |
| 7. | Quantity of fuel used | Kg/hr | : | 0.0 (F.Oil) + 3528.237 (F.Gas) |
| 8. | Gas Flow rate | $Nm^3/hr.$ | : | 108976.1 |

| S.No. | Parameters | Unit | | Results | Specification/ SPCB Norms | Method Used |
|---|---|---|---|---|---|---|
| 1. | Particulate Matter | $mg/Nm^3$ | : | 4 | 5 | IS 11255 (Part 1) : 1985 |
| 2. | Sulphur Dioxide($SO_2$) | $mg/Nm^3$ | : | 10.13 | 50 | IS 11255 (Part 2) : 1985 |
| 3. | Oxides of Nitrogen (NOx) | $mg/Nm^3$ | : | 136.12 | 250 | IS 11255 (Part 7) : 2005 |
| 4. | CO | $mg/Nm^3$ | : | 4.70 | 100 | IS 11255 (Part 3): 2008 |
| 5. | Nickel | $mg/Nm^3$ | : | N.D. | 5 | USEPA(2000)-Method 29 |
| 6. | $H_2S$ | $mg/Nm^3$ | : | N.D. | N.A. | IS 11255 (Part-4): 2006 |

Remark:(1) Flow Rate for PM – 20 LPM (2) Flow Rate for Gaseous sampling – 2 LPM (3) Calorific Value in Kcal/kg (i) F.Oil – 10264(ii)F.Gas - 12077 (4) The Specification is computed based on the heat supplied by Gas & Liquid Fuels. N.D. - Not Detected.

**Authorized By -**

**Name : Bhavisha Pandya** **Designation : Sr.Chemist**

NOTE:
1) Reports may be reproduced, if required, but only in full and only with written approval of the laboratory.
2) Re analysis of sample will be done, if requested within 7 days from the date of Reporting of sample if the samples are not consumed during analysis.
3) The results reported above relate to the sample identified under Sample Details.

----------END OF REPORT----------

# KADAM ENVIRONMENTAL CONSULTANTS

An ISO 9001-2015 Certified Company (MoEF Approved)

871/B/3, Near Himalaya Machinery, GIDC Makarpura, Vadodara-10.
Phone : (O) 0265 - 6131000, 6131001


## ENVIRONMENTAL MONITORING REPORT

### LABORATORY TEST REPORT - STACK EMMISION

**REPORT NO.: OCT23/016/17**

**SAMPLE DETAILS**

| | | | |
|---|---|---|---|
| 1. | Name & Address of Client: Bharat Petroleum Corporation Ltd. Bina Refinery, Village: Agasod, Bina - 470124, Dist: Sagar, Madhya Pradesh, India. | | |
| 2. | Sample ID: 2148088246–016OC23SE02 | 3. | Client Representative: Mr. Anil Medhe |
| 4. | Sample Date: 06.10.2023 | 5. | Sampling Location: DCU |
| 6. | Sampling Time: 15:00 hr | 7. | Sampling Duration: 48 Mins |
| 8. | Analysis commenced on: 16.10.2023 | 9. | Analysis Completed on: 16.10.2023 |
| 10. | Reporting Date: 01.11.2023 | 11. | Discipline: Chemical |
| 12. | Sample Collected By: Mr. Jitendra Sinha | 13. | Group: Atmospheric Pollution |
| 14. | Sampling Procedure: IS: 11255 Method | 15. | Product: Stack Emission |
| 16. | Description of Sample: Sampling Bottles: Sealed √ | Thimble:Packed√ | Bladder: Clamped √ |
| 17. | Sample Received Date: 16.10.2023 | | |

**STACK DETAILS**

| S.No. | Parameters | Unit (SI) | | Description |
|---|---|---|---|---|
| 1. | Source | | : | **DCU (Common Stack for Coker Feed Heaters A&B)** |
| 2. | Height | m | : | 60 (From Ground level) |
| 3. | Diameter | m | : | 2.18 |
| 4. | Temperature | $^{o}c$ | : | 185 |
| 5. | Velocity | m/s | : | - |
| 6. | Type of fuel used | | : | Fuel Oil + Fuel Gas |
| 7. | Quantity of fuel used | Kg/hr | : | 0.0 (F.Oil) + 3528.237 (F.Gas) |
| 8. | Gas Flow rate | $Nm^3/hr.$ | : | 108976.1 |

| S.No. | Parameters | Unit | | Results | Specification/ SPCB Norms | Method Used |
|---|---|---|---|---|---|---|
| 1. | Vanadium | $mg/Nm^3$ | : | N.D. | 5 | APHA 23rd Edition 3500-V B |

Remark:(1) Flow Rate for PM – 20 LPM (2) Flow Rate for Gaseous sampling – 2 LPM (3) Calorific Value in Kcal/kg (i) F.Oil – 10264(ii)F.Gas - 12077 (4) The Specification is computed based on the heat supplied by Gas & Liquid Fuels. **N.D. - Not Detected.**

**Authorized By -**

**Name : Bhavisha Pandya** | **Designation : Sr.Chemist**

NOTE:
1) Reports may be reproduced, if required, but only in full and only with written approval of the laboratory.
2) Re analysis of sample will be done, if requested within 7 days from the date of Reporting of sample if the samples are not consumed during analysis.
3) The results reported above relate to the sample identified under Sample Details.

----------**END OF REPORT**----------

## LABORATORY TEST REPORT - STACK EMMISION

**REPORT NO.: OCT23/016/10 (ULR- TC709923000021282F)**

### SAMPLE DETAILS

| | | | |
|---|---|---|---|
| 1. | Name & Address of Client: Bharat Petroleum Corporation Ltd.<br>Bina Refinery, Village: Agasod, Bina - 470124, Dist: Sagar, Madhya Pradesh, India. | | |
| 2. | Sample ID: 2148088246-016OC23SE10 | 3. | Client Representative: Mr. Anil Medhe |
| 4. | Sample Date: 11.10.2023 | 5. | Sampling Location: CPP Boiler – I |
| 6. | Sampling Time: 12:50 hr | 7. | Sampling Duration: 34 Mins |
| 8. | Analysis commenced on: 16.10.2023 | 9. | Analysis Completed on: 16.10.2023 |
| 10. | Reporting Date: 01.11.2023 | 11. | Discipline: Chemical |
| 12. | Sample Collected By: Mr. Jitendra Sinha | 13. | Group: Atmospheric Pollution |
| 14. | Sampling Procedure: IS: 11255 Method | 15. | Product: Stack Emission |
| 16. | Description of Sample: Sampling Bottles: Sealed √ | Thimble:Packed√ | Bladder: Clamped √ |
| 17. | Sample Received Date: 16.10.2023 | | |

### STACK DETAILS

| S.No. | Parameters | Unit (SI) | | Description |
|---|---|---|---|---|
| 1. | Source | | : | **CPP Boiler - I** |
| 2. | Height | m | : | 100 |
| 3. | Diameter | m | : | 3.87 |
| 4. | Temperature | °c | : | 159 |
| 5. | Velocity | m/s | : | 17.90 |
| 6. | Type of fuel used | | : | Pet Coke + Coal |
| 7. | Quantity of fuel used | Kg/hr | : | 305 (Pet Coke) + 0.0 (Coal) |
| 8. | Gas Flow rate | $Nm^3/hr.$ | : | 523541.8 |

| S.No. | Parameters | Unit | | Results | Specification/ SPCB Norms | Method Used |
|---|---|---|---|---|---|---|
| 1. | Particulate Matter | $mg/Nm^3$ | : | 25 | 50 | IS 11255 (Part 1) : 1985 |
| 2. | Sulphur Dioxide($SO_2$) | $mg/Nm^3$ | : | 246.89 | 600 | IS 11255 (Part 2) : 1985 |
| 3. | Oxides of Nitrogen (NOx) | $mg/Nm^3$ | : | 241.54 | 450 | IS 11255 (Part 7) : 2005 |
| 4. | CO | $mg/Nm^3$ | : | 16.80 | N.A. | IS 11255 (Part 3): 2008 |

**Remark: (1) Flow Rate for PM – 21 LPM (2) Flow Rate for Gaseous sampling – 2 LPM.**

**Authorized By -**

**Name : Bhavisha Pandya** | **Designation : Sr.Chemist**

NOTE:
1) Reports may be reproduced, if required, but only in full and only with written approval of the laboratory.
2) Re analysis of sample will be done, if requested within 7 days from the date of Reporting of sample if the samples are not consumed during analysis.
3) The results reported above relate to the sample identified under Sample Details.

----------END OF REPORT----------

# KADAM ENVIRONMENTAL CONSULTANTS

An ISO 9001-2015 Certified Company (MoEF Approved)

871/B/3, Near Himalaya Machinery, GIDC Makarpura, Vadodara-10.
Phone : (O) 0265 - 6131000, 6131001


## ENVIRONMENTAL MONITORING REPORT

### LABORATORY TEST REPORT - STACK EMMISION

**REPORT NO.: OCT23/016/25**

**SAMPLE DETAILS**

| | | | |
|---|---|---|---|
| 1. | Name & Address of Client: Bharat Petroleum Corporation Ltd. Bina Refinery, Village: Agasod, Bina - 470124, Dist: Sagar, Madhya Pradesh, India. | | |
| 2. | Sample ID: 2148088246-016OC23SE10 | 3. | Client Representative: Mr. Anil Medhe |
| 4. | Sample Date: 06.10.2023 | 5. | Sampling Location: CPP Boiler – I |
| 6. | Sampling Time: 12:50 hr | 7. | Sampling Duration: 34 Mins |
| 8. | Analysis commenced on: 16.10.2023 | 9. | Analysis Completed on: 16.10.2023 |
| 10. | Reporting Date: 01.11.2023 | 11. | Discipline: Chemical |
| 12. | Sample Collected By: Mr. Jitendra Sinha | 13. | Group: Atmospheric Pollution |
| 14. | Sampling Procedure: IS: 11255 Method | 15. | Product: Stack Emission |
| 16. | Description of Sample: Sampling Bottles: Sealed √ | Thimble:Packed√ | Bladder: Clamped √ |
| 17. | Sample Received Date: 16.10.2023 | | |

**STACK DETAILS**

| S.No. | Parameters | Unit (SI) | | Description |
|---|---|---|---|---|
| 1. | Source | | : | **CPP Boiler - I** |
| 2. | Height | m | : | 100 |
| 3. | Diameter | m | : | 3.87 |
| 4. | Temperature | °c | : | 159 |
| 5. | Velocity | m/s | : | 17.90 |
| 6. | Type of fuel used | | : | Pet Coke + Coal |
| 7. | Quantity of fuel used | Kg/hr | : | 305 (Pet Coke) + 0.0 (Coal) |
| 8. | Gas Flow rate | $Nm^3/hr.$ | : | 523541.8 |

| S.No. | Parameters | Unit | | Results | Specification/ SPCB Norms | Method Used |
|---|---|---|---|---|---|---|
| 1. | Mercury | $mg/Nm^3$ | : | <0.02 | 0.03 | APHA 23rd Edition 3112-B |

**Remark: (1) Flow Rate for PM – 21 LPM (2) Flow Rate for Gaseous sampling – 2 LPM.**

**Authorized By -**

**Name : Bhavisha Pandya** | **Designation : Sr.Chemist**

NOTE:
1) Reports may be reproduced, if required, but only in full and only with written approval of the laboratory.
2) Re analysis of sample will be done, if requested within 7 days from the date of Reporting of sample if the samples are not consumed during analysis.
3) The results reported above relate to the sample identified under Sample Details.

----------END OF REPORT----------

## LABORATORY TEST REPORT - STACK EMMISION

REPORT NO.: OCT23/016/11 (ULR- TC709923000021283F)

### SAMPLE DETAILS

| | | | |
|---|---|---|---|
| 1. | Name & Address of Client: Bharat Petroleum Corporation Ltd.<br>Bina Refinery, Village: Agasod, Bina - 470124, Dist: Sagar, Madhya Pradesh, India. | | |
| 2. | Sample ID: 2148088246-016OC23SE11 | 3. | Client Representative: Mr. Anil Medhe |
| 4. | Sample Date: 11.10.2023 | 5. | Sampling Location: CPP Boiler - II |
| 6. | Sampling Time: - | 7. | Sampling Duration: - |
| 8. | Analysis commenced on: - | 9. | Analysis Completed on: - |
| 10. | Reporting Date: 01.11.2023 | 11. | Discipline: Chemical |
| 12. | Sample Collected By: Mr. Jitendra Sinha | 13. | Group: Atmospheric Pollution |
| 14. | Sampling Procedure: IS: 11255 Method | 15. | Product: Stack Emission |
| 16. | Description of Sample: | Sampling Bottles: Sealed √ | Thimble:Packed√ / Bladder: Clamped √ |
| 17. | Sample Received Date: - | | |

### STACK DETAILS

| S.No. | Parameters | Unit (SI) | | Description |
|---|---|---|---|---|
| 1. | Source | | : | **CPP Boiler - II** |
| 2. | Height | m | : | 100 |
| 3. | Diameter | m | : | 3.87 |
| 4. | Temperature | °c | : | - |
| 5. | Velocity | m/s | : | - |
| 6. | Type of fuel used | | : | - |
| 7. | Quantity of fuel used | MT/day | : | - |
| 8. | Gas Flow rate | $Nm^3/hr.$ | : | - |

| S.No. | Parameters | Unit | | Results | Specification/ SPCB Norms | Method Used |
|---|---|---|---|---|---|---|
| 1. | Particulate Matter | $mg/Nm^3$ | : | - | 50 | IS 11255 (Part 1) : 1985 |
| 2. | Sulphur Dioxide($SO_2$) | $mg/Nm^3$ | : | - | 600 | IS 11255 (Part 2) : 1985 |
| 3. | Oxides of Nitrogen (NOx) | $mg/Nm^3$ | : | - | 450 | IS 11255 (Part 7) : 2005 |
| 4. | CO | $mg/Nm^3$ | : | - | N.A. | IS 11255 (Part 3): 2008 |

**Remark: Boiler was under Shutdown during the sampling period.**

**Authorized By -**

**Name : Bhavisha Pandya** | **Designation : Sr.Chemist**

NOTE:
1) Reports may be reproduced, if required, but only in full and only with written approval of the laboratory.
2) Re analysis of sample will be done, if requested within 7 days from the date of Reporting of sample if the samples are not consumed during analysis.
3) The results reported above relate to the sample identified under Sample Details.

----------END OF REPORT----------

# KADAM ENVIRONMENTAL CONSULTANTS

An ISO 9001-2015 Certified Company (MoEF Approved)

871/B/3, Near Himalaya Machinery, GIDC Makarpura, Vadodara-10.
Phone : (O) 0265 - 6131000, 6131001


## ENVIRONMENTAL MONITORING REPORT

### LABORATORY TEST REPORT - STACK EMMISION

**REPORT NO.: OCT23/016/26**

**SAMPLE DETAILS**

| | | | |
|---|---|---|---|
| 1. | Name & Address of Client: Bharat Petroleum Corporation Ltd.<br>Bina Refinery, Village: Agasod, Bina - 470124, Dist: Sagar, Madhya Pradesh, India. | | |
| 2. | Sample ID: 2148088246–016OC23SE11 | 3. | Client Representative: Mr. Anil Medhe |
| 4. | Sample Date: 11.10.2023 | 5. | Sampling Location: CPP Boiler - II |
| 6. | Sampling Time: - | 7. | Sampling Duration: - |
| 8. | Analysis commenced on: - | 9. | Analysis Completed on: - |
| 10. | Reporting Date: 01.11.2023 | 11. | Discipline: Chemical |
| 12. | Sample Collected By: Mr. Jitendra Sinha | 13. | Group: Atmospheric Pollution |
| 14. | Sampling Procedure: IS: 11255 Method | 15. | Product: Stack Emission |
| 16. | Description of Sample: Sampling Botties: Sealed √ | Thimble:Packed√ | Bladder: Clamped √ |
| 17. | Sample Received Date: - | | |

**STACK DETAILS**

| S.No. | Parameters | Unit (SI) | | Description |
|---|---|---|---|---|
| 1. | Source | | : | **CPP Boiler - II** |
| 2. | Height | m | : | 100 |
| 3. | Diameter | m | : | 3.87 |
| 4. | Temperature | °c | : | - |
| 5. | Velocity | m/s | : | - |
| 6. | Type of fuel used | | : | - |
| 7. | Quantity of fuel used | MT/day | : | - |
| 8. | Gas Flow rate | $Nm^3/hr.$ | : | - |

| S.No. | Parameters | Unit | | Results | Specification/ SPCB Norms | Method Used |
|---|---|---|---|---|---|---|
| 1. | Mercury | $mg/Nm^3$ | : | - | 0.03 | APHA 23rd Edition 3112-B |

**Remark: Boiler was under Shutdown during the sampling period.**

**Authorized By -**

**Name : Bhavisha Pandya** **Designation : Sr.Chemist**

NOTE:
1) Reports may be reproduced, if required, but only in full and only with written approval of the laboratory.
2) Re analysis of sample will be done, if requested within 7 days from the date of Reporting of sample if the samples are not consumed during analysis.
3) The results reported above relate to the sample identified under Sample Details.

----------END OF REPORT----------

## LABORATORY TEST REPORT - STACK EMMISION

REPORT NO.: OCT23/016/12 (ULR- TC709923000021284F)

### SAMPLE DETAILS

| | | | |
|---|---|---|---|
| 1. | Name & Address of Client: Bharat Petroleum Corporation Ltd. Bina Refinery, Village: Agasod, Bina - 470124, Dist: Sagar, Madhya Pradesh, India. | | |
| 2. | Sample ID: 2148088246-016OC23SE12 | 3. | Client Representative: Mr. Anil Medhe |
| 4. | Sample Date: 11.10.2023 | 5. | Sampling Location: CPP Boiler - III |
| 6. | Sampling Time: 13:35 hr | 7. | Sampling Duration: 35 Mins |
| 8. | Analysis commenced on: 16.10.2023 | 9. | Analysis Completed on: 16.10.2023 |
| 10. | Reporting Date: 01.11.2023 | 11. | Discipline: Chemical |
| 12. | Sample Collected By: Mr. Jitendra Sinha | 13. | Group: Atmospheric Pollution |
| 14. | Sampling Procedure: IS: 11255 Method | 15. | Product: Stack Emission |
| 16. | Description of Sample: Sampling Bottles: Sealed √ | Thimble: Packed √ | Bladder: Clamped √ |
| 17. | Sample Received Date: 16.10.2023 | | |

### STACK DETAILS

| S.No. | Parameters | Unit (SI) | | Description |
|---|---|---|---|---|
| 1. | Source | | : | **CPP Boiler - III** |
| 2. | Height | m | : | 100 |
| 3. | Diameter | m | : | 3.87 |
| 4. | Temperature | °c | : | 154 |
| 5. | Velocity | m/s | : | 17.16 |
| 6. | Type of fuel used | | : | Pet Coke + Coal |
| 7. | Quantity of fuel used | MT/day | : | 305 (Pet Coke) + 0.0 (Coal) |
| 8. | Gas Flow rate | $Nm^3/hr.$ | : | 507741.0 |

| S.No. | Parameters | Unit | | Results | Specification/ SPCB Norms | Method Used |
|---|---|---|---|---|---|---|
| 1. | Particulate Matter | $mg/Nm^3$ | : | 29 | 50 | IS 11255 (Part 1) : 1985 |
| 2. | Sulphur Dioxide($SO_2$) | $mg/Nm^3$ | : | 331.88 | 600 | IS 11255 (Part 2) : 1985 |
| 3. | Oxides of Nitrogen (NOx) | $mg/Nm^3$ | : | 175.23 | 450 | IS 11255 (Part 7) : 2005 |
| 4. | CO | $mg/Nm^3$ | : | 18.18 | N.A. | IS 11255 (Part 3): 2008 |

**Remark: (1) Flow Rate for PM – 21 LPM (2) Flow Rate for Gaseous sampling – 2 LPM.**

**Authorized By -**

**Name : Bhavisha Pandya** | **Designation : Sr.Chemist**

NOTE:
1) Reports may be reproduced, if required, but only in full and only with written approval of the laboratory.
2) Re analysis of sample will be done, if requested within 7 days from the date of Reporting of sample if the samples are not consumed during analysis.
3) The results reported above relate to the sample identified under Sample Details.

----------END OF REPORT----------

# KADAM ENVIRONMENTAL CONSULTANTS

An ISO 9001-2015 Certified Company (MoEF Approved)

871/B/3, Near Himalaya Machinery, GIDC Makarpura, Vadodara-10.
Phone : (O) 0265 - 6131000, 6131001


## ENVIRONMENTAL MONITORING REPORT

### LABORATORY TEST REPORT - STACK EMMISION

**REPORT NO.: OCT23/016/27**

**SAMPLE DETAILS**

| | | | |
|---|---|---|---|
| 1. | Name & Address of Client: Bharat Petroleum Corporation Ltd. Bina Refinery, Village: Agasod, Bina - 470124, Dist: Sagar, Madhya Pradesh, India. | | |
| 2. | Sample ID: 2148088246-0160C23SE12 | 3. | Client Representative: Mr. Anil Medhe |
| 4. | Sample Date: 11.10.2023 | 5. | Sampling Location: CPP Boiler - III |
| 6. | Sampling Time: 13:35 hr | 7. | Sampling Duration: 35 Mins |
| 8. | Analysis commenced on: 16.10.2023 | 9. | Analysis Completed on: 16.10.2023 |
| 10. | Reporting Date: 01.11.2023 | 11. | Discipline: Chemical |
| 12. | Sample Collected By: Mr. Jitendra Sinha | 13. | Group: Atmospheric Pollution |
| 14. | Sampling Procedure: IS: 11255 Method | 15. | Product: Stack Emission |
| 16. | Description of Sample: Sampling Bottles: Sealed √ | Thimble:Packed√ | Bladder: Clamped √ |
| 17. | Sample Received Date: 16.10.2023 | | |

**STACK DETAILS**

| S.No. | Parameters | Unit (SI) | | Description |
|---|---|---|---|---|
| 1. | Source | | : | **CPP Boiler - III** |
| 2. | Height | m | : | 100 |
| 3. | Diameter | m | : | 3.87 |
| 4. | Temperature | °c | : | 154 |
| 5. | Velocity | m/s | : | 17.16 |
| 6. | Type of fuel used | | : | Pet Coke + Coal |
| 7. | Quantity of fuel used | Kg/hr | : | 305 (Pet Coke) + 0.0 (Coal) |
| 8. | Gas Flow rate | $Nm^3/hr.$ | : | 507741.0 |

| S.No. | Parameters | Unit | | Results | Specification/ SPCB Norms | Method Used |
|---|---|---|---|---|---|---|
| 1. | Mercury | $mg/Nm^3$ | : | <0.02 | 0.03 | APHA 23rd Edition 3112-B |

**Remark: (1) Flow Rate for PM – 21 LPM (2) Flow Rate for Gaseous sampling – 2 LPM.**

**Authorized By -**

**Name : Bhavisha Pandya** **Designation : Sr.Chemist**

NOTE:
1) Reports may be reproduced, if required, but only in full and only with written approval of the laboratory.
2) Re analysis of sample will be done, if requested within 7 days from the date of Reporting of sample if the samples are not consumed during analysis.
3) The results reported above relate to the sample identified under Sample Details.

----------END OF REPORT----------

## LABORATORY TEST REPORT - STACK EMMISION

**REPORT NO.: OCT23/016/09 (ULR- TC709923000021281F)**

### SAMPLE DETAILS

| | | | |
|---|---|---|---|
| 1. | Name & Address of Client: Bharat Petroleum Corporation Ltd.<br>Bina Refinery, Village: Agasod, Bina - 470124, Dist: Sagar, Madhya Pradesh, India. | | |
| 2. | Sample ID: 2148088246-016OC23SE09 | 3. | Client Representative: Mr. Anil Medhe |
| 4. | Sample Date: 10.10.2023 | 5. | Sampling Location: SRU |
| 6. | Sampling Time: 16:00 hr | 7. | Sampling Duration: 44 Mins |
| 8. | Analysis commenced on: 16.10.2023 | 9. | Analysis Completed on: 16.10.2023 |
| 10. | Reporting Date: 01.11.2023 | 11. | Discipline: Chemical |
| 12. | Sample Collected By: Mr. Jitendra Sinha | 13. | Group: Atmospheric Pollution |
| 14. | Sampling Procedure: IS: 11255 Method | 15. | Product: Stack Emission |
| 16. | Description of Sample: Sampling Bottles: Sealed √ | Thimble:Packed | Bladder: Clamped √ |
| 17. | Sample Received Date: 16.10.2023 | | |

### STACK DETAILS

| S.No. | Parameters | Unit (SI) | | Description |
|---|---|---|---|---|
| 1. | Source | | : | **SRU** |
| 2. | Height | m | : | 80 |
| 3. | Diameter | m | : | 1.23 |
| 4. | Temperature | °c | : | 282 |
| 5. | Velocity | m/s | : | 13.30 |
| 6. | Type of fuel used | | : | Fuel Gas |
| 7. | Quantity of fuel used | Kg/hr | : | 491.643 (F.Gas) |
| 8. | Gas Flow rate | $Nm^3$/hr. | : | 30554.5 |

| S.No. | Parameters | Unit | | Results | Specification/ SPCB Norms | Method Used |
|---|---|---|---|---|---|---|
| 1. | Particulate Matter | $mg/Nm^3$ | : | 11 | N.A. | IS 11255 (Part 1) : 1985 |
| 2. | Sulphur Dioxide($SO_2$) | $mg/Nm^3$ | : | 224 | N.A. | IS 11255 (Part 2) : 1985 |
| 3. | Oxides of Nitrogen (NOx) | $mg/Nm^3$ | : | 66.69 | 250 | IS 11255 (Part 7) : 2005 |
| 4. | CO | $mg/Nm^3$ | : | 3.36 | 100 | IS 11255 (Part 3): 2008 |
| 5. | Nickel | $mg/Nm^3$ | : | N.D. | N.A | USEPA(2000)-Method 29 |
| 6. | $H_2S$ | $mg/Nm^3$ | : | 3.18 | 10 | IS 11255 (Part-4): 2006 |

Remark:(1) Flow Rate for PM – 21 LPM (2) Flow Rate for Gaseous sampling – 2 LPM (3) Calorific Value in Kcal/kg (i) F.Oil – 10264(ii)F.Gas - 12077 (4) The Specification is computed based on the heat supplied by Gas & Liquid Fuels. N.D. - Not Detected.

**Authorized By -**

**Name : Bhavisha Pandya** | **Designation : Sr.Chemist**

NOTE:
1) Reports may be reproduced, if required, but only in full and only with written approval of the laboratory.
2) Re analysis of sample will be done, if requested within 7 days from the date of Reporting of sample if the samples are not consumed during analysis.
3) The results reported above relate to the sample identified under Sample Details.

----------END OF REPORT----------

# KADAM ENVIRONMENTAL CONSULTANTS

An ISO 9001-2015 Certified Company (MoEF Approved)

871/B/3, Near Himalaya Machinery, GIDC Makarpura, Vadodara-10.
Phone : (O) 0265 - 6131000, 6131001


## ENVIRONMENTAL MONITORING REPORT

### LABORATORY TEST REPORT - STACK EMMISION

REPORT NO.: OCT23/016/24

### SAMPLE DETAILS

| | | | |
|---|---|---|---|
| 1. | Name & Address of Client: Bharat Petroleum Corporation Ltd. Bina Refinery, Village: Agasod, Bina - 470124, Dist: Sagar, Madhya Pradesh, India. | | |
| 2. | Sample ID: 2148088246–016OC23SE09 | 3. | Client Representative: Mr. Anil Medhe |
| 4. | Sample Date: 10.10.2023 | 5. | Sampling Location: SRU |
| 6. | Sampling Time: 16:00 hr | 7. | Sampling Duration: 44 Mins |
| 8. | Analysis commenced on: 16.10.2023 | 9. | Analysis Completed on: 16.10.2023 |
| 10. | Reporting Date: 01.11.2023 | 11. | Discipline: Chemical |
| 12. | Sample Collected By: Mr. Jitendra Sinha | 13. | Group: Atmospheric Pollution |
| 14. | Sampling Procedure: IS: 11255 Method | 15. | Product: Stack Emission |
| 16. | Description of Sample: Sampling Bottles: Sealed √ | Thimble:Packed√ | Bladder: Clamped √ |
| 17. | Sample Received Date: 16.10.2023 | | |

### STACK DETAILS

| S.No. | Parameters | Unit (SI) | | Description |
|---|---|---|---|---|
| 1. | Source | | : | **SRU** |
| 2. | Height | m | : | 80 |
| 3. | Diameter | m | : | 1.23 |
| 4. | Temperature | °c | : | 282 |
| 5. | Velocity | m/s | : | 13.30 |
| 6. | Type of fuel used | | : | Fuel Gas |
| 7. | Quantity of fuel used | Kg/hr | : | 491.643 (F.Gas) |
| 8. | Gas Flow rate | $Nm^3/hr.$ | : | 30554.5 |

| S.No. | Parameters | Unit | | Results | Specification/ SPCB Norms | Method Used |
|---|---|---|---|---|---|---|
| 1. | Vanadium | $mg/Nm^3$ | : | N.D. | 5 | APHA 23rd Edition 3500-V B |

Remark:(1) Flow Rate for PM – 21 LPM (2) Flow Rate for Gaseous sampling – 2 LPM (3) Calorific Value in Kcal/kg (i) F.Oil – 10264(ii)F.Gas - 12077 (4) The Specification is computed based on the heat supplied by Gas & Liquid Fuels. **N.D. - Not Detected.**

**Authorized By -**

**Name : Bhavisha Pandya** | **Designation : Sr.Chemist**

NOTE:
1) Reports may be reproduced, if required, but only in full and only with written approval of the laboratory.
2) Re analysis of sample will be done, if requested within 7 days from the date of Reporting of sample if the samples are not consumed during analysis.
3) The results reported above relate to the sample identified under Sample Details.

----------END OF REPORT----------

## LABORATORY TEST REPORT - STACK EMMISION

**REPORT NO.: OCT23/016/14 (ULR- TC709923000021286F)**

### SAMPLE DETAILS

| | | | |
|---|---|---|---|
| 1. | Name & Address of Client: Bharat Petroleum Corporation Ltd. Bina Refinery, Village: Agasod, Bina - 470124, Dist: Sagar, Madhya Pradesh, India. | | |
| 2. | Sample ID: 2148088246–016OC23SE14 | 3. | Client Representative: Mr. Anil Medhe |
| 4. | Sample Date: 10.10.2023 | 5. | Sampling Location: KHDS |
| 6. | Sampling Time: 16:10 hr | 7. | Sampling Duration: 46 Mins |
| 8. | Analysis commenced on: 16.10.2023 | 9. | Analysis Completed on: 16.10.2023 |
| 10. | Reporting Date: 01.11.2023 | 11. | Discipline: Chemical |
| 12. | Sample Collected By: Mr. Jitendra Sinha | 13. | Group: Atmospheric Pollution |
| 14. | Sampling Procedure: IS: 11255 Method | 15. | Product: Stack Emission |
| 16. | Description of Sample: Sampling Bottles: Sealed √ | Thimble:Packed√ | Bladder: Clamped √ |
| 17. | Sample Received Date: 16.10.2023 | | |

### STACK DETAILS

| S.No. | Parameters | Unit (SI) | | Description |
|---|---|---|---|---|
| 1. | Source | | : | **KHDS** |
| 2. | Height | m | : | 60 |
| 3. | Diameter | m | : | 1.59 |
| 4. | Temperature | °c | : | 230 |
| 5. | Velocity | m/s | : | 12.82 |
| 6. | Type of fuel used | | : | Fuel Oil + Fuel Gas |
| 7. | Quantity of fuel used | Kg/hr | : | 0.834 (F.Oil) + 571.29 (F.Gas) |
| 8. | Gas Flow rate | $Nm^3/hr.$ | : | 54302.1 |

| S.No. | Parameters | Unit | | Results | Specification/ SPCB Norms | Method Used |
|---|---|---|---|---|---|---|
| 1. | Particulate Matter | $mg/Nm^3$ | : | 4 | 5 | IS 11255 (Part 1) : 1985 |
| 2. | Sulphur Dioxide($SO_2$) | $mg/Nm^3$ | : | 20.25 | 51 | IS 11255 (Part 2) : 1985 |
| 3. | Oxides of Nitrogen (NOx) | $mg/Nm^3$ | : | 91.76 | 250 | IS 11255 (Part 7) : 2005 |
| 4. | CO | $mg/Nm^3$ | : | 9.09 | 100 | IS 11255 (Part 3): 2008 |
| 5. | Nickel | $mg/Nm^3$ | : | N.D. | N.A. | USEPA(2000)-Method 29 |
| 6. | $H_2S$ | $mg/Nm^3$ | : | N.D. | N.A. | IS 11255 (Part-4): 2006 |

**Remark: (1) Flow Rate for PM – 21 LPM (2) Flow Rate for Gaseous sampling – 2 LPM. / N.D. - Not Detected.**

**Authorized By**

**Name : Bhavisha Pandya** | **Designation : Sr.Chemist**

NOTE:
1) Reports may be reproduced, if required, but only in full and only with written approval of the laboratory.
2) Re analysis of sample will be done, if requested within 7 days from the date of Reporting of sample if the samples are not consumed during analysis.
3) The results reported above relate to the sample identified under Sample Details.

----------**END OF REPORT**----------

# KADAM ENVIRONMENTAL CONSULTANTS

An ISO 9001-2015 Certified Company (MoEF Approved)

871/B/3, Near Himalaya Machinery, GIDC Makarpura, Vadodara-10.
Phone : (O) 0265 - 6131000, 6131001


## ENVIRONMENTAL MONITORING REPORT

### LABORATORY TEST REPORT - STACK EMMISION

**REPORT NO.: OCT23/016/29**

### SAMPLE DETAILS

| | | | |
|---|---|---|---|
| 1. | Name & Address of Client: Bharat Petroleum Corporation Ltd. Bina Refinery, Village: Agasod, Bina - 470124, Dist: Sagar, Madhya Pradesh, India. | | |
| 2. | Sample ID: 2148088246–016OC23SE14 | 3. | Client Representative: Mr. Anil Medhe |
| 4. | Sample Date: 10.10.2023 | 5. | Sampling Location: KHDS |
| 6. | Sampling Time: 16:10 hr | 7. | Sampling Duration: 46 Mins |
| 8. | Analysis commenced on: 16.10.2023 | 9. | Analysis Completed on: 16.10.2023 |
| 10. | Reporting Date: 01.11.2023 | 11. | Discipline: Chemical |
| 12. | Sample Collected By: Mr. Jitendra Sinha | 13. | Group: Atmospheric Pollution |
| 14. | Sampling Procedure: IS: 11255 Method | 15. | Product: Stack Emission |
| 16. | Description of Sample: | Sampling Bottles: Sealed √ | Thimble:Packed√ / Bladder: Clamped √ |
| 17. | Sample Received Date: 16.10.2023 | | |

### STACK DETAILS

| S.No. | Parameters | Unit (SI) | | Description |
|---|---|---|---|---|
| 1. | Source | | : | **KHDS** |
| 2. | Height | m | : | 60 |
| 3. | Diameter | m | : | 1.59 |
| 4. | Temperature | °c | : | 230 |
| 5. | Velocity | m/s | : | 12.82 |
| 6. | Type of fuel used | | : | Fuel Gas |
| 7. | Quantity of fuel used | Kg/hr | : | 0.834 (F.Oil) + 571.29 (F.Gas) |
| 8. | Gas Flow rate | $Nm^3/hr.$ | : | 54302.1 |

| S.No. | Parameters | Unit | | Results | Specification/ SPCB Norms | Method Used |
|---|---|---|---|---|---|---|
| 1. | Vanadium | $mg/Nm^3$ | : | N.D. | 5 | APHA 23rd Edition 3500-V B |

Remark:(1) Flow Rate for PM – 21 LPM (2) Flow Rate for Gaseous sampling – 2 LPM (3) Calorific Value in Kcal/kg (i) F.Oil – 10264(ii)F.Gas - 12077 (4) The Specification is computed based on the heat supplied by Gas & Liquid Fuels. **N.D. - Not Detected.**

**Authorized By :-**

**Name : Bhavisha Pandya** | **Designation : Sr.Chemist**

NOTE:
1) Reports may be reproduced, if required, but only in full and only with written approval of the laboratory.
2) Re analysis of sample will be done, if requested within 7 days from the date of Reporting of sample if the samples are not consumed during analysis.
3) The results reported above relate to the sample identified under Sample Details.

----------END OF REPORT----------

## LABORATORY TEST REPORT - STACK EMMISION

**REPORT NO.: OCT23/016/13 (ULR- TC709923000021285F)**

### SAMPLE DETAILS

| | | | |
|---|---|---|---|
| 1. | Name & Address of Client: Bharat Petroleum Corporation Ltd.<br>Bina Refinery, Village: Agasod, Bina - 470124, Dist: Sagar, Madhya Pradesh, India. | | |
| 2. | Sample ID: 2148088246–016OC23SE13 | 3. | Client Representative: Mr. Anil Medhe |
| 4. | Sample Date: 11.10.2023 | 5. | Sampling Location: Utility Boiler |
| 6. | Sampling Time: 15:10 hr | 7. | Sampling Duration: 63 Mins |
| 8. | Analysis commenced on: 16.10.2023 | 9. | Analysis Completed on: 16.10.2023 |
| 10. | Reporting Date: 01.11.2023 | 11. | Discipline: Chemical |
| 12. | Sample Collected By: Mr. Jitendra Sinha | 13. | Group: Atmospheric Pollution |
| 14. | Sampling Procedure: IS: 11255 Method | 15. | Product: Stack Emission |
| 16. | Description of Sample: | Sampling Bottles: Sealed √ | Thimble:Packed√ / Bladder: Clamped √ |
| 17. | Sample Received Date: 16.10.2023 | | |

### STACK DETAILS

| S.No. | Parameters | Unit (SI) | | Description |
|---|---|---|---|---|
| 1. | Source | | : | **Utility Boiler** |
| 2. | Height | m | : | 123 |
| 3. | Diameter | m | : | 2.67 |
| 4. | Temperature | °c | : | 124 |
| 5. | Velocity | m/s | : | 9.66 |
| 6. | Type of fuel used | | : | Fuel Oil + Fuel Gas |
| 7. | Quantity of fuel used | Kg/hr | : | 621.33 (F.Oil) + 2410.26 (F.Gas) |
| 8. | Gas Flow rate | $Nm^3$/hr. | : | 146164.1 |

| S.No. | Parameters | Unit | | Results | Specification/ SPCB Norms | Method Used |
|---|---|---|---|---|---|---|
| 1. | Particulate Matter | $mg/Nm^3$ | : | 10 | 13 | IS 11255 (Part 1) : 1985 |
| 2. | Sulphur Dioxide($SO_2$) | $mg/Nm^3$ | : | 172.70 | 194 | IS 11255 (Part 2) : 1985 |
| 3. | Oxides of Nitrogen (NOx) | $mg/Nm^3$ | : | 224.75 | 268 | IS 11255 (Part 7) : 2005 |
| 4. | CO | $mg/Nm^3$ | : | 11.2 | 109 | IS 11255 (Part 3): 2008 |
| 5. | Nickel | $mg/Nm^3$ | : | N.D. | N.A | USEPA(2000)-Method 29 |

**Remark: (1) Flow Rate for PM – 21 LPM (2) Flow Rate for Gaseous sampling – 2 LPM. / N.D. - Not Detected.**

**Authorized By :**

**Name : Bhavisha Pandya** | **Designation : Sr.Chemist**

NOTE:
1) Reports may be reproduced, if required, but only in full and only with written approval of the laboratory.
2) Re analysis of sample will be done, if requested within 7 days from the date of Reporting of sample if the samples are not consumed during analysis.
3) The results reported above relate to the sample identifed under Sample Details.

----------END OF REPORT----------

# KADAM ENVIRONMENTAL CONSULTANTS

An ISO 9001-2015 Certified Company (MoEF Approved)

871/B/3, Near Himalaya Machinery, GIDC Makarpura, Vadodara-10.
Phone : (O) 0265 - 6131000, 6131001


## ENVIRONMENTAL MONITORING REPORT

### LABORATORY TEST REPORT - STACK EMMISION

**REPORT NO.: OCT23/016/28**

**SAMPLE DETAILS**

| | | | |
|---|---|---|---|
| 1. | Name & Address of Client: Bharat Petroleum Corporation Ltd. Bina Refinery, Village: Agasod, Bina - 470124, Dist: Sagar, Madhya Pradesh, India. | | |
| 2. | Sample ID: 2148088246–016OC23SE13 | 3. | Client Representative: Mr. Anil Medhe |
| 4. | Sample Date: 11.10.2023 | 5. | Sampling Location: Utility Boiler |
| 6. | Sampling Time: 15:10 hr | 7. | Sampling Duration: 63 Mins |
| 8. | Analysis commenced on: 16.10.2023 | 9. | Analysis Completed on: 16.10.2023 |
| 10. | Reporting Date: 01.11.2023 | 11. | Discipline: Chemical |
| 12. | Sample Collected By: Mr. Jitendra Sinha | 13. | Group: Atmospheric Pollution |
| 14. | Sampling Procedure: IS: 11255 Method | 15. | Product: Stack Emission |
| 16. | Description of Sample: Sampling Bottles: Sealed √ | Thimble:Packed√ | Bladder: Clamped √ |
| 17. | Sample Received Date: 16.10.2023 | | |

**STACK DETAILS**

| S.No. | Parameters | Unit (SI) | | Description |
|---|---|---|---|---|
| 1. | Source | | : | **Utility Boiler** |
| 2. | Height | m | : | 123 |
| 3. | Diameter | m | : | 2.67 |
| 4. | Temperature | °C | : | 124 |
| 5. | Velocity | m/s | : | 9.66 |
| 6. | Type of fuel used | | : | Fuel Oil + Fuel Gas |
| 7. | Quantity of fuel used | Kg/hr | : | 621.33 (F.Oil) + 2410.26 (F.Gas) |
| 8. | Gas Flow rate | $Nm^3/hr.$ | : | 146164.1 |

| S.No. | Parameters | Unit | | Results | Specification/ SPCB Norms | Method Used |
|---|---|---|---|---|---|---|
| 1. | Vanadium | $mg/Nm^3$ | : | N.D. | 5 | APHA 23rd Edition 3500-V B |

Remark:(1) Flow Rate for PM – 21 LPM (2) Flow Rate for Gaseous sampling – 2 LPM (3) Calorific Value in Kcal/kg (i) F.Oil-10264(ii)F.Gas -12077 (4) The Specification is computed based on the heat supplied by Gas & Liquid Fuels. **N.D. - Not Detected.**

**Authorized By -**

**Name : Bhavisha Pandya** | **Designation : Sr.Chemist**

NOTE:
1) Reports may be reproduced, if required, but only in full and only with written approval of the laboratory.
2) Re analysis of sample will be done, if requested within 7 days from the date of Reporting of sample if the samples are not consumed during analysis.
3) The results reported above relate to the sample identified under Sample Details.

----------**END OF REPORT**----------

## LABORATORY TEST REPORT - STACK

**REPORT NO.: SEP23/031/01 (ULR- TC709923000019163F)**

### SAMPLE DETAILS

| | | | |
|---|---|---|---|
| 1. | Name & Address of Client: Bharat Petroleum Corporation Ltd.<br>Bina Refinery, Village: Agasod, Bina - 470124, Dist: Sagar, Madhya Pradesh, India. | | |
| 2. | Sample ID: 2148088246-031SE23SE01 | 3. | Client Representative: Mr. Anil Medhe |
| 4. | Sample Date: 04.09.2023 | 5. | Sampling Location: CDU/VDU |
| 6. | Sampling Time: 12:50 hr | 7. | Sampling Duration: 42 Mins |
| 8. | Analysis commenced on: 13.09.2023 | 9. | Analysis Completed on: 15.09.2023 |
| 10. | Reporting Date: 26.09.2023 | 11. | Discipline: Chemical |
| 12. | Sample Collected By: Mr. Jitendra Sinha | 13. | Group: Atmospheric Pollution |
| 14. | Sampling Procedure: IS Method | 15. | Product: Stack Emission |
| 16. | Description of Sample: | Sampling Bottles: Sealed √ | Thimble:Packed√ / Bladder : Clamped √ |
| 17. | Sample Received Date: 13.09.2023 | | |

### STACK DETAILS

| S.No. | Parameters | Unit (SI) | | Description |
|---|---|---|---|---|
| 1. | Source | | : | **CDU/VDU (Common Stack for Crude and Vacuum Heaters)** |
| 2. | Height | m | : | 100 (From Ground level) |
| 3. | Diameter | m | : | 4.45 |
| 4. | Temperature | °c | : | 273 |
| 5. | Velocity | m/s | : | 13.99 |
| 6. | Type of fuel used | | : | Fuel Oil +Fuel Gas |
| 7. | Quantity of fuel used | Kg/hr | : | 2347.71 (F.Oil) + 8223.24 (F.Gas) |
| 8. | Gas Flow rate | $Nm^3/hr.$ | | 427694.9 |

| S.No. | Parameters | Unit | | Results | Specification/ SPCB Norms | Method Used |
|---|---|---|---|---|---|---|
| 1. | Particulate Matter | $mg/Nm^3$ | : | 11 | 14 | IS 11255 (Part 1) : 1985 |
| 2. | Sulphur Dioxide($SO_2$) | $mg/Nm^3$ | : | 32.62 | 206 | IS 11255 (Part 2) : 1985 |
| 3. | Oxides of Nitrogen (NOx) | $mg/Nm^3$ | : | 114.36 | 270 | IS 11255 (Part 7) : 2005 |
| 4. | CO | $mg/Nm^3$ | : | 15.66 | 110 | IS 11255 (Part 3): 2008 |
| 5. | Nickel | $mg/Nm^3$ | : | <0.0001 | 5 | USEPA(2000)-Method 29 |
| 6. | $H_2S$ | $mg/Nm^3$ | : | N.D. | N.A. | IS 11255 (Part-4): 2006 |

Remark:(1) Flow Rate for PM – 21 LPM (2) Flow Rate for Gaseous sampling – 2 LPM (3) Calorific Value in Kcal/kg (i) F.Oil-10264(ii)F.Gas -12077 (4) The Specification is computed based on the heat supplied by Gas & Liquid Fuels. N.D. - Not Detected.

**Authorized By -**

**Name : Sapana Amin** | **Designation : Lab Incharge**

NOTE:
1) Reports may be reproduced, if required, but only in full and only with written approval of the laboratory.
2) Re analysis of sample will be done, if requested within 7 days from the date of Reporting of sample if the samples are not consumed during analysis.
3) The results reported above relate to the sample identified under Sample Details.

----------END OF REPORT----------

# KADAM ENVIRONMENTAL CONSULTANTS

An ISO 9001-2015 Certified Company (MoEF Approved)

871/B/3, Near Himalaya Machinery, GIDC Makarpura, Vadodara-10.
Phone : (O) 0265 - 6131000, 6131001


## ENVIRONMENTAL MONITORING REPORT

### LABORATORY TEST REPORT - STACK

**REPORT NO.: SEP23/031/21**

**SAMPLE DETAILS**

| | | | | | |
|---|---|---|---|---|---|
| 1. | Name & Address of Client: Bharat Petroleum Corporation Ltd. Bina Refinery, Village: Agasod, Bina - 470124, Dist: Sagar, Madhya Pradesh, India. | | | | |
| 2. | Sample ID: 2148088246-031SE23SE01 | 3. | Client Representative: Mr. Anil Medhe | | |
| 4. | Sample Date: 04.09.2023 | 5. | Sampling Location: CDU/VDU | | |
| 6. | Sampling Time: 12:50 hr | 7. | Sampling Duration: 42 Mins | | |
| 8. | Analysis commenced on: 13.09.2023 | 9. | Analysis Completed on: 15.09.2023 | | |
| 10. | Reporting Date: 26.09.2023 | 11. | Discipline: Chemical | | |
| 12. | Sample Collected By: Mr. Jitendra Sinha | 13. | Group: Atmospheric Pollution | | |
| 14. | Sampling Procedure: IS Method | 15. | Product: Stack Emission | | |
| 16. | Description of Sample: | Sampling Bottles: Sealed √ | Thimble:Packed√ | Bladder : Clamped √ | |
| 17. | Sample Received Date: 13.09.2023 | | | | |

**STACK DETAILS**

| S.No. | Parameters | Unit (SI) | | Description |
|---|---|---|---|---|
| 1. | Source | | : | **CDU/VDU (Common Stack for Crude and Vacuum Heaters)** |
| 2. | Height | m | : | 100 (From Ground level) |
| 3. | Diameter | m | : | 4.45 |
| 4. | Temperature | °c | : | 273 |
| 5. | Velocity | m/s | : | 13.99 |
| 6. | Type of fuel used | | : | Fuel oil +Fuel Gas |
| 7. | Quantity of fuel used | Kg/hr | : | 2347.71 (F.Oil) + 8223.24 (F.Gas) |
| 8. | Gas Flow rate | $Nm^3/hr.$ | : | 427694.9 |

| S.No. | Parameters | Unit | | Results | Specification/ SPCB Norms | Method Used |
|---|---|---|---|---|---|---|
| 1. | Vanadium | $mg/Nm^3$ | : | N.D. | 5 | APHA 23rd Edition 3500-V B |

Remark:(1) Flow Rate for PM – 21 LPM (2) Flow Rate for Gaseous sampling – 2 LPM (3) Calorific Value in Kcal/kg (i) F.Oil–10264(ii)F.Gas -12077 (4) The Specification is computed based on the heat supplied by Gas & Liquid Fuels. **N.D. - Not Detected.**

**Authorized By -**

**Name : Sapana Amin** **Designation : Lab Incharge**

NOTE:
1) Reports may be reproduced, if required, but only in full and only with written approval of the laboratory.
2) Re analysis of sample will be done, if requested within 7 days from the date of Reporting of sample if the samples are not consumed during analysis.
3) The results reported above relate to the sample identified under Sample Details.

----------**END OF REPORT**----------

## LABORATORY TEST REPORT - STACK

**REPORT NO.: SEP23/031/05 (ULR- TC709923000019167F)**

### SAMPLE DETAILS

| | | | |
|---|---|---|---|
| 1. | Name & Address of Client: Bharat Petroleum Corporation Ltd.<br>Bina Refinery, Village: Agasod, Bina - 470124, Dist: Sagar, Madhya Pradesh, India. | | |
| 2. | Sample ID: 2148088246–031SE23SE05 | 3. | Client Representative: Mr. Anil Medhe |
| 4. | Sample Date: 05.09.2023 | 5. | Sampling Location: MS Block (Hot Oil Heater) |
| 6. | Sampling Time: 16:15 hr | 7. | Sampling Duration: 46 Mins |
| 8. | Analysis commenced on: 13.09.2023 | 9. | Analysis Completed on: 15.09.2023 |
| 10. | Reporting Date: 26.09.2023 | 11. | Discipline: Chemical |
| 12. | Sample Collected By: Mr. Jitendra Sinha | 13. | Group: Atmospheric Pollution |
| 14. | Sampling Procedure: IS Method | 15. | Product: Stack Emission |
| 16. | Description of Sample: | Sampling Bottles: Sealed √ | Thimble:Packed√ / Bladder: Clamped √ |
| 17. | Sample Received Date: 13.09.2023 | | |

### STACK DETAILS

| S.No. | Parameters | Unit (SI) | | Description |
|---|---|---|---|---|
| 1. | Source | | : | **MS Block (Hot Oil Heater)** |
| 2. | Height | m | : | 60 (From Ground Level) |
| 3. | Diameter | m | : | 2.6 |
| 4. | Temperature | °c | : | 218 |
| 5. | Velocity | m/s | : | 12.97 |
| 6. | Type of fuel used | | : | Fuel Oil +Fuel Gas |
| 7. | Quantity of fuel used | Kg/hr | : | 0.0 (F.Oil) + 2706.33 (F.Gas) |
| 8. | Gas Flow rate | $Nm^3/hr.$ | : | 150495.4 |

| S.No. | Parameters | Unit | | Results | Specification/ SPCB Norms | Method Used |
|---|---|---|---|---|---|---|
| 1. | Particulate Matter | $mg/Nm^3$ | : | 3 | 5 | IS 11255 (Part 1) : 1985 |
| 2. | Sulphur Dioxide($SO_2$) | $mg/Nm^3$ | : | 37.08 | 50 | IS 11255 (Part 2) : 1985 |
| 3. | Oxides of Nitrogen (NOx) | $mg/Nm^3$ | : | 160.68 | 250 | IS 11255 (Part 7) : 2005 |
| 4. | CO | $mg/Nm^3$ | : | 10.43 | 100 | IS 11255 (Part 3): 2008 |
| 5. | Nickel | $mg/Nm^3$ | : | <0.0001 | 5 | USEPA(2000)-Method 29 |
| 6. | $H_2S$ | $mg/Nm^3$ | : | N.D. | N.A. | IS 11255 (Part-4): 2006 |

Remark:(1) Flow Rate for PM – 18 LPM (2) Flow Rate for Gaseous sampling – 2 LPM (3) Calorific Value in Kcal/kg (i) F.Oil – 10264(ii)F.Gas - 12077 (4) The Specification is computed based on the heat supplied by Gas & Liquid Fuels. N.D. - Not Detected.

**Authorized By -**

**Name : Sapana Amin** | **Designation : Lab Incharge**

NOTE:
1) Reports may be reproduced, if required, but only in full and only with written approval of the laboratory.
2) Re analysis of sample will be done, if requested within 7 days from the date of Reporting of sample if the samples are not consumed during analysis.
3) The results reported above relate to the sample identified under Sample Details.

----------END OF REPORT----------

# KADAM ENVIRONMENTAL CONSULTANTS

An ISO 9001-2015 Certified Company (MoEF Approved)

871/B/3, Near Himalaya Machinery, GIDC Makarpura, Vadodara-10.
Phone : (O) 0265 - 6131000, 6131001


## ENVIRONMENTAL MONITORING REPORT

### LABORATORY TEST REPORT - STACK

**REPORT NO.: SEP23/031/25**

**SAMPLE DETAILS**

| | | | |
|---|---|---|---|
| 1. | Name & Address of Client: Bharat Petroleum Corporation Ltd. Bina Refinery, Village: Agasod, Bina - 470124, Dist: Sagar, Madhya Pradesh, India. | | |
| 2. | Sample ID: 2148088246-031SE23SE05 | 3. | Client Representative: Mr. Anil Medhe |
| 4. | Sample Date: 08.09.2023 | 5. | Sampling Location: MS Block (Hot Oil Heater) |
| 6. | Sampling Time: 16:15 hr | 7. | Sampling Duration: 46 Mins |
| 8. | Analysis commenced on: 13.09.2023 | 9. | Analysis Completed on: 15.09.2023 |
| 10. | Reporting Date: 26.09.2023 | 11. | Discipline: Chemical |
| 12. | Sample Collected By: Mr. Jitendra Sinha | 13. | Group: Atmospheric Pollution |
| 14. | Sampling Procedure: IS Method | 15. | Product: Stack Emission |
| 16. | Description of Sample: | Sampling Bottles: Sealed √ | Thimble:Packed√ / Bladder: Clamped √ |
| 17. | Sample Received Date: 13.09.2023 | | |

**STACK DETAILS**

| S.No. | Parameters | Unit (SI) | | Description |
|---|---|---|---|---|
| 1. | Source | | : | **MS Block (Hot oil Heater)** |
| 2. | Height | m | : | 60 (From Ground Level) |
| 3. | Diameter | m | : | 2.6 |
| 4. | Temperature | °c | : | 218 |
| 5. | Velocity | m/s | : | 12.97 |
| 6. | Type of fuel used | | : | Fuel oil +Fuel Gas |
| 7. | Quantity of fuel used | Kg/hr | : | 0.0 (F.Oil) + 2706.33 (F.Gas) |
| 8. | Gas Flow rate | $Nm^3/hr.$ | : | 150495.4 |

| S.No. | Parameters | Unit | | Results | Specification/ SPCB Norms | Method Used |
|---|---|---|---|---|---|---|
| 1. | Vanadium | $mg/Nm^3$ | : | N.D. | 5 | APHA 23rd Edition 3500-V B |

Remark:(1) Flow Rate for PM – 18 LPM (2) Flow Rate for Gaseous sampling – 2 LPM (3) Calorific Value in Kcal/kg (i) F.Oil – 10264(ii)F.Gas - 12077 (4) The Specification is computed based on the heat supplied by Gas & Liquid Fuels. **N.D. - Not Detected.**

**Authorized By -**

**Name : Sapana Amin** | **Designation : Lab Incharge**

NOTE:
1) Reports may be reproduced, if required, but only in full and only with written approval of the laboratory.
2) Re analysis of sample will be done, if requested within 7 days from the date of Reporting of sample if the samples are not consumed during analysis.
3) The results reported above relate to the sample identified under Sample Details.

----------END OF REPORT----------

## LABORATORY TEST REPORT - STACK

**REPORT NO.: SEP23/031/06 (ULR- TC709923000019168F)**

### SAMPLE DETAILS

| | | | |
|---|---|---|---|
| 1. | Name & Address of Client: Bharat Petroleum Corporation Ltd.<br>Bina Refinery, Village: Agasod, Bina - 470124, Dist: Sagar, Madhya Pradesh, India. | | |
| 2. | Sample ID: 2148088246–031SE23SE06 | 3. | Client Representative: Mr. Anil Medhe |
| 4. | Sample Date: 05.09.2023 | 5. | Sampling Location: MS Block (NHT-CCR Common Stack) |
| 6. | Sampling Time: 16:20 hr | 7. | Sampling Duration: 42 Mins |
| 8. | Analysis commenced on: 13.09.2023 | 9. | Analysis Completed on: 15.09.2023 |
| 10. | Reporting Date: 26.09.2023 | 11. | Discipline: Chemical |
| 12. | Sample Collected By: Mr. Jitendra Sinha | 13. | Group: Atmospheric Pollution |
| 14. | Sampling Procedure: IS Method | 15. | Product: Stack Emission |
| 16. | Description of Sample: Sampling Bottles: Sealed √ | Thimble:Packed√ | Bladder: Clamped √ |
| 17. | Sample Received Date: 13.09.2023 | | |

### STACK DETAILS

| S.No. | Parameters | Unit (SI) | | Description |
|---|---|---|---|---|
| 1. | Source | | : | **MS Block (NHT-CCR Common Stack)** |
| 2. | Height | m | : | 60 (from Ground Level) |
| 3. | Diameter | m | : | 3.2 |
| 4. | Temperature | °c | : | 260 |
| 5. | Velocity | m/s | : | 13.83 |
| 6. | Type of fuel used | | : | Fuel Oil +Fuel Gas |
| 7. | Quantity of fuel used | Kg/hr | : | 0.0 (F.Oil) + 4778.82 (F.Gas) |
| 8. | Gas Flow rate | $Nm^3$/hr. | : | 223962.1 |

| S.No. | Parameters | Unit | | Results | Specification/ SPCB Norms | Method Used |
|---|---|---|---|---|---|---|
| 1. | Particulate Matter | $mg/Nm^3$ | : | 2 | 5 | IS 11255 (Part 1) : 1985 |
| 2. | Sulphur Dioxide($SO_2$) | $mg/Nm^3$ | : | 26.94 | 50 | IS 11255 (Part 2) : 1985 |
| 3. | Oxides of Nitrogen (NOx) | $mg/Nm^3$ | : | 161.19 | 250 | IS 11255 (Part 7) : 2005 |
| 4. | CO | $mg/Nm^3$ | : | 12.05 | 100 | IS 11255 (Part 3): 2008 |
| 5. | Nickel | $mg/Nm^3$ | : | <0.0001 | 5 | USEPA(2000)-Method 29 |
| 6. | $H_2S$ | $mg/Nm^3$ | : | N.D. | N.A. | IS 11255 (Part-4): 2006 |

Remark:(1) Flow Rate for PM – 21 LPM (2) Flow Rate for Gaseous sampling – 2 LPM (3) Calorific Value in Kcal/kg (i) F.Oil – 10264(ii)F.Gas - 12077 (4) The Specification is computed based on the heat supplied by Gas & Liquid Fuels. N.D. - Not Detected.

**Authorized By -**

**Name : Sapana Amin** | **Designation : Lab Incharge**

NOTE:
1) Reports may be reproduced, if required, but only in full and only with written approval of the laboratory.
2) Re analysis of sample will be done, if requested within 7 days from the date of Reporting of sample if the samples are not consumed during analysis.
3) The results reported above relate to the sample identified under Sample Details.

----------END OF REPORT----------

# KADAM ENVIRONMENTAL CONSULTANTS

An ISO 9001-2015 Certified Company (MoEF Approved)

871/B/3, Near Himalaya Machinery, GIDC Makarpura, Vadodara-10.
Phone : (O) 0265 - 6131000, 6131001


## ENVIRONMENTAL MONITORING REPORT

### LABORATORY TEST REPORT - STACK

**REPORT NO.: SEP23/031/26**

**SAMPLE DETAILS**

| | | | |
|---|---|---|---|
| 1. | Name & Address of Client: Bharat Petroleum Corporation Ltd. Bina Refinery, Village: Agasod, Bina - 470124, Dist: Sagar, Madhya Pradesh, India. | | |
| 2. | Sample ID: 2148088246-031SE23SE06 | 3. | Client Representative: Mr. Anil Medhe |
| 4. | Sample Date: 05.09.2023 | 5. | Sampling Location: MS Block (NHT-CCR Common Stack) |
| 6. | Sampling Time: 16:20 hr | 7. | Sampling Duration: 42 Mins |
| 8. | Analysis commenced on: 13.09.2023 | 9. | Analysis Completed on: 15.09.2023 |
| 10. | Reporting Date: 26.09.2023 | 11. | Discipline: Chemical |
| 12. | Sample Collected By: Mr. Jitendra Sinha | 13. | Group: Atmospheric Pollution |
| 14. | Sampling Procedure: IS Method | 15. | Product: Stack Emission |
| 16. | Description of Sample: Sampling Bottles: Sealed √ | Thimble:Packed√ | Bladder: Clamped √ |
| 17. | Sample Received Date: 13.09.2023 | | |

**STACK DETAILS**

| S.No. | Parameters | Unit (SI) | | Description |
|---|---|---|---|---|
| 1. | Source | | : | **MS Block (NHT-CCR Common Stack)** |
| 2. | Height | m | : | 60 (from Ground Level) |
| 3. | Diameter | m | : | 3.2 |
| 4. | Temperature | °c | : | 260 |
| 5. | Velocity | m/s | : | 13.83 |
| 6. | Type of fuel used | | : | Fuel Oil +Fuel Gas |
| 7. | Quantity of fuel used | Kg/hr | : | 0.0 (F.Oil) + 4778.82 (F.Gas) |
| 8. | Gas Flow rate | $Nm^3/hr.$ | : | 223962.1 |

| S.No. | Parameters | Unit | | Results | Specification/ SPCB Norms | Method Used |
|---|---|---|---|---|---|---|
| 1. | Vanadium | $mg/Nm^3$ | : | N.D. | 5 | APHA 23rd Edition 3500-V B |

Remark:(1) Flow Rate for PM – 21 LPM (2) Flow Rate for Gaseous sampling – 2 LPM (3) Calorific Value in Kcal/kg (i) F.Oil – 10264(ii)F.Gas - 12077 (4) The Specification is computed based on the heat supplied by Gas & Liquid Fuels. **N.D. - Not Detected.**

**Authorized By -**

**Name : Sapana Amin** **Designation : Lab Incharge**

NOTE: 1) Reports may be reproduced, if required, but only in full and only with written approval of the laboratory.
2) Re analysis of sample will be done, if requested within 7 days from the date of Reporting of sample if the samples are not consumed during analysis.
3) The results reported above relate to the sample identified under Sample Details.

----------END OF REPORT----------

## LABORATORY TEST REPORT - STACK

**REPORT NO.: SEP23/031/08 (ULR- TC709923000019170F)**

### SAMPLE DETAILS

| | | | |
|---|---|---|---|
| 1. | Name & Address of Client: Bharat Petroleum Corporation Ltd. Bina Refinery, Village: Agasod, Bina - 470124, Dist: Sagar, Madhya Pradesh, India. | | |
| 2. | Sample ID: 2148088246-031SE23SE08 | 3. | Client Representative: Mr. Anil Medhe |
| 4. | Sample Date: 05.09.2023 | 5. | Sampling Location: MS Block (CCR Auxiliary) 1 & 2 Inter Heater |
| 6. | Sampling Time: 17:20 hr | 7. | Sampling Duration: 46 Mins |
| 8. | Analysis commenced on: 13.09.2023 | 9. | Analysis Completed on: 15.09.2023 |
| 10. | Reporting Date: 26.09.2023 | 11. | Discipline: Chemical |
| 12. | Sample Collected By: Mr. Jitendra Sinha | 13. | Group: Atmospheric Pollution |
| 14. | Sampling Procedure: IS Method | 15. | Product: Stack Emission |
| 16. | Description of Sample: Sampling Bottles: Sealed √ | Thimble:Packed√ | Bladder: Clamped √ |
| 17. | Sample Received Date: 13.09.2023 | | |

### STACK DETAILS

| S.No. | Parameters | Unit (SI) | | Description |
|---|---|---|---|---|
| 1. | Source | | : | **MS Block (CCR Auxiliary) 1 & 2 Inter Heater** |
| 2. | Height | m | : | 65 |
| 3. | Diameter | m | : | 1.65 |
| 4. | Temperature | °c | : | 185 |
| 5. | Velocity | m/s | : | 12.82 |
| 6. | Type of fuel used | | : | Fuel Oil +Fuel Gas |
| 7. | Quantity of fuel used | Kg/hr | : | 0.0 (F.Oil) + 262.71 (F.Gas) |
| 8. | Gas Flow rate | $Nm^3/hr$. | : | 64239.1 |

| S.No. | Parameters | Unit | | Results | Specification/ SPCB Norms | Method Used |
|---|---|---|---|---|---|---|
| 1. | Particulate Matter | $mg/Nm^3$ | : | 3 | 5 | IS 11255 (Part 1) : 1985 |
| 2. | Sulphur Dioxide($SO_2$) | $mg/Nm^3$ | : | 48.04 | 50 | IS 11255 (Part 2) : 1985 |
| 3. | Oxides of Nitrogen (NOx) | $mg/Nm^3$ | : | 97.42 | 250 | IS 11255 (Part 7) : 2005 |
| 4. | CO | $mg/Nm^3$ | : | 6.09 | 100 | IS 11255 (Part 3): 2008 |
| 5. | Nickel | $mg/Nm^3$ | : | <0.0001 | N.A. | USEPA(2000)-Method 29 |
| 6. | $H_2S$ | $mg/Nm^3$ | : | N.D. | N.A. | IS 11255 (Part-4): 2006 |

Remark:(1) Flow Rate for PM – 21 LPM (2) Flow Rate for Gaseous sampling – 2 LPM (3) Calorific Value in Kcal/kg (i) F.Oil – 10264(ii)F.Gas - 12077 (4) The Specification is computed based on the heat supplied by Gas & Liquid Fuels. N.D. - Not Detected.

**Authorized By -**

**Name : Sapana Amin** **Designation : Lab Incharge**

NOTE: 1) Reports may be reproduced, if required, but only in full and only with written approval of the laboratory.
2) Re analysis of sample will be done, if requested within 7 days from the date of Reporting of sample if the samples are not consumed during analysis.
3) The results reported above relate to the sample identified under Sample Details.

----------END OF REPORT----------

# KADAM ENVIRONMENTAL CONSULTANTS

An ISO 9001-2015 Certified Company (MoEF Approved)

871/B/3, Near Himalaya Machinery, GIDC Makarpura, Vadodara-10.
Phone : (O) 0265 - 6131000, 6131001


## ENVIRONMENTAL MONITORING REPORT

### LABORATORY TEST REPORT - STACK

REPORT NO.: SEP23/031/28

### SAMPLE DETAILS

| | | | |
|---|---|---|---|
| 1. | Name & Address of Client: Bharat Petroleum Corporation Ltd. Bina Refinery, Village: Agasod, Bina - 470124, Dist: Sagar, Madhya Pradesh, India. | | |
| 2. | Sample ID: 2148088246-031SE23SE08 | 3. | Client Representative: Mr. Anil Meche |
| 4. | Sample Date: 05.09.2023 | 5. | Sampling Location: MS Block (CCR Auxiliary) 1 & 2 Inter Heater |
| 6. | Sampling Time: 17:20 hr | 7. | Sampling Duration: 46 Mins |
| 8. | Analysis commenced on: 13.09.2023 | 9. | Analysis Completed on: 15.09.2023 |
| 10. | Reporting Date: 26.09.2023 | 11. | Discipline: Chemical |
| 12. | Sample Collected By: Mr. Jitendra Sinha | 13. | Group: Atmospheric Pollution |
| 14. | Sampling Procedure: IS Method | 15. | Product: Stack Emission |
| 16. | Description of Sample: Sampling Bottles: Sealed √ | Thimble:Packed√ | Bladder: Clamped √ |
| 17. | Sample Received Date: 13.09.2023 | | |

### STACK DETAILS

| S.No. | Parameters | Unit (SI) | | Description |
|---|---|---|---|---|
| 1. | Source | | : | **MS Block (CCR Auxilary) 1 & 2 Inter Heater** |
| 2. | Height | m | : | 65 |
| 3. | Diameter | m | : | 1.65 |
| 4. | Temperature | °c | : | 185 |
| 5. | Velocity | m/s | : | 12.82 |
| 6. | Type of fuel used | | : | Fuel Oil +Fuel Gas |
| 7. | Quantity of fuel used | Kg/hr | : | 0.0 (F.Oil) + 262.71 (F.Gas) |
| 8. | Gas Flow rate | $Nm^3/hr.$ | : | 64239.1 |

| S.No. | Parameters | Unit | | Results | Specification/ SPCB Norms | Method Used |
|---|---|---|---|---|---|---|
| 1. | Vanadium | $mg/Nm^3$ | : | N.D. | 5 | APHA 23rd Edition 3500-V B |

Remark:(1) Flow Rate for PM – 21 LPM (2) Flow Rate for Gaseous sampling – 2 LPM (3) Calorific Value in Kcal/kg (i) F.Oil – 10264(ii)F.Gas - 12077 (4) The Specification is computed based on the heat supplied by Gas & Liquid Fuels. **N.D. - Not Detected.**

**Authorized By -**

**Name : Sapana Amin** **Designation : Lab Incharge**

NOTE:
1) Reports may be reproduced, if required, but only in full and only with written approval of the laboratory.
2) Re analysis of sample will be done, if requested within 7 days from the date of Reporting of sample if the samples are not consumed during analysis.
3) The results reported above relate to the sample identified under Sample Details.

----------END OF REPORT----------

## LABORATORY TEST REPORT - STACK

**REPORT NO.: SEP23/031/07 (ULR- TC709923000019169F)**

### SAMPLE DETAILS

| | | | |
|---|---|---|---|
| 1. | Name & Address of Client: Bharat Petroleum Corporation Ltd. Bina Refinery, Village: Agasod, Bina - 470124, Dist: Sagar, Madhya Pradesh, India. | | |
| 2. | Sample ID: 2148088246-031SE23SE07 | 3. | Client Representative: Mr. Anil Medhe |
| 4. | Sample Date: 08.09.2023 | 5. | Sampling Location: MS Block (NHT Auxiliary) Heater |
| 6. | Sampling Time: 14:50 hr | 7. | Sampling Duration: 46 Mins |
| 8. | Analysis commenced on: 13.09.2023 | 9. | Analysis Completed on: 15.09.2023 |
| 10. | Reporting Date: 26.09.2023 | 11. | Discipline: Chemical |
| 12. | Sample Collected By: Mr. Jitendra Sinha | 13. | Group: Atmospheric Pollution |
| 14. | Sampling Procedure: IS Method | 15. | Product: Stack Emission |
| 16. | Description of Sample: Sampling Bottles: Sealed √ | Thimble:Packed√ | Bladder: Clamped √ |
| 17. | Sample Received Date: 13.09.2023 | | |

### STACK DETAILS

| S.No. | Parameters | Unit (SI) | | Description |
|---|---|---|---|---|
| 1. | Source | | : | **MS Block (NHT Auxiliary) Heater** |
| 2. | Height | m | : | 60 |
| 3. | Diameter | m | : | 1.75 |
| 4. | Temperature | °c | : | 203 |
| 5. | Velocity | m/s | : | 13.07 |
| 6. | Type of fuel used | | : | Fuel Oil +Fuel Gas |
| 7. | Quantity of fuel used | Kg/hr | : | 0.0 (F.Oil) + 400.32 (F.Gas) |
| 8. | Gas Flow rate | $Nm^3/hr.$ | : | 70885.6 |

| S.No. | Parameters | Unit | | Results | Specification/ SPCB Norms | Method Used |
|---|---|---|---|---|---|---|
| 1. | Particulate Matter | $mg/Nm^3$ | : | 3 | 5 | IS 11255 (Part 1) : 1985 |
| 2. | Sulphur Dioxide($SO_2$) | $mg/Nm^3$ | : | 31.95 | 50 | IS 11255 (Part 2) : 1985 |
| 3. | Oxides of Nitrogen (NOx) | $mg/Nm^3$ | : | 114.88 | 250 | IS 11255 (Part 7) : 2005 |
| 4. | CO | $mg/Nm^3$ | : | 5.88 | 100 | IS 11255 (Part 3): 2008 |
| 5. | Nickel | $mg/Nm^3$ | : | <0.0001 | N.A. | USEPA(2000)-Method 29 |
| 6. | $H_2S$ | $mg/Nm^3$ | : | N.D. | N.A. | IS 11255 (Part-4): 2006 |

Remark:(1) Flow Rate for PM – 21 LPM (2) Flow Rate for Gaseous sampling – 2 LPM (3) Calorific Value in Kcal/kg (i) F.Oil – 10264(ii)F.Gas - 12077 (4) The Specification is computed based on the heat supplied by Gas & Liquid Fuels. N.D. - Not Detected.

**Authorized By -**

**Name : Sapana Amin** | **Designation : Lab Incharge**

NOTE:
1) Reports may be reproduced, if required, but only in full and only with written approval of the laboratory.
2) Re analysis of sample will be done, if requested within 7 days from the date of Reporting of sample if the samples are not consumed during analysis.
3) The results reported above relate to the sample identified under Sample Details.

----------END OF REPORT----------

# KADAM ENVIRONMENTAL CONSULTANTS

An ISO 9001-2015 Certified Company (MoEF Approved)

871/B/3, Near Himalaya Machinery, GIDC Makarpura, Vadodara-10.
Phone : (O) 0265 - 6131000, 6131001


## ENVIRONMENTAL MONITORING REPORT

### LABORATORY TEST REPORT - STACK

REPORT NO.: SEP23/031/27

### SAMPLE DETAILS

| | | | |
|---|---|---|---|
| 1. | Name & Address of Client: Bharat Petroleum Corporation Ltd.<br>Bina Refinery, Village: Agasod, Bina - 470124, Dist: Sagar, Madhya Pradesh, India. | | |
| 2. | Sample ID: 2148088246-031SE23SE07 | 3. | Client Representative: Mr. Anil Medhe |
| 4. | Sample Date: 08.09.2023 | 5. | Sampling Location: MS Block (NHT Auxiliary) Heater |
| 6. | Sampling Time: 14:50 hr | 7. | Sampling Duration: 46 Mins |
| 8. | Analysis commenced on: 13.09.2023 | 9. | Analysis Completed on: 15.09.2023 |
| 10. | Reporting Date: 26.09.2023 | 11. | Discipline: Chemical |
| 12. | Sample Collected By: Mr. Jitendra Sinha | 13. | Group: Atmospheric Pollution |
| 14. | Sampling Procedure: IS Method | 15. | Product: Stack Emission |
| 16. | Description of Sample: Sampling Bottles: Sealed √ | Thimble:Packed√ | Bladder: Clamped √ |
| 17. | Sample Received Date: 13.09.2023 | | |

### STACK DETAILS

| S.No. | Parameters | Unit (SI) | | Description |
|---|---|---|---|---|
| 1. | Source | | : | **MS Block (NHT Auxilary) Heater** |
| 2. | Height | m | : | 60 |
| 3. | Diameter | m | : | 1.75 |
| 4. | Temperature | °c | : | 203 |
| 5. | Velocity | m/s | : | 13.07 |
| 6. | Type of fuel used | | : | Fuel Oil +Fuel Gas |
| 7. | Quantity of fuel used | Kg/hr | : | 0.0 (F.Oil) + 400.32 (F.Gas) |
| 8. | Gas Flow rate | $Nm^3/hr.$ | : | 70885.6 |

| S.No. | Parameters | Unit | | Results | Specification/ SPCB Norms | Method Used |
|---|---|---|---|---|---|---|
| 1. | Vanadium | $mg/Nm^3$ | : | N.D. | 5 | APHA 23rd Edition 3500-V B |

Remark:(1) Flow Rate for PM – 21 LPM (2) Flow Rate for Gaseous sampling – 2 LPM (3) Calorific Value in Kcal/kg (i) F.Oil – 10264(ii)F.Gas - 12077 (4) The Specification is computed based on the heat supplied by Gas & Liquid Fuels. **N.D. - Not Detected.**

**Authorized By -**

**Name : Sapana Amin** **Designation : Lab Incharge**

NOTE: 1) Reports may be reproduced, if required, but only in full and only with written approval of the laboratory.
2) Re analysis of sample will be done, if requested within 7 days from the date of Reporting of sample if the samples are not consumed during analysis.
3) The results reported above relate to the sample identified under Sample Details.

----------END OF REPORT----------

## LABORATORY TEST REPORT - STACK

**REPORT NO.: SEP23/031/04 (ULR- TC709923000019166F)**

### SAMPLE DETAILS

| | | | |
|---|---|---|---|
| 1. | Name & Address of Client: Bharat Petroleum Corporation Ltd.<br>Bina Refinery, Village: Agasod, Bina - 470124, Dist: Sagar, Madhya Pradesh, India. | | |
| 2. | Sample ID: 2148088246–031SE23SE04 | 3. | Client Representative: Mr. Anil Medhe |
| 4. | Sample Date: 04.09.2023 | 5. | Sampling Location: HCU |
| 6. | Sampling Time: 16:00 hr | 7. | Sampling Duration: 44 Mins |
| 8. | Analysis commenced on: 13.09.2023 | 9. | Analysis Completed on: 15.09.2023 |
| 10. | Reporting Date: 26.09.2023 | 11. | Discipline: Chemical |
| 12. | Sample Collected By: Mr. Jitendra Sinha | 13. | Group: Atmospheric Pollution |
| 14. | Sampling Procedure: IS Method | 15. | Product: Stack Emission |
| 16. | Description of Sample: | Sampling Bottles: Sealed √ | Thimble:Packed√ / Bladder: Clamped √ |
| 17. | Sample Received Date: 13.09.2023 | | |

### STACK DETAILS

| S.No. | Parameters | Unit (SI) | | Description |
|---|---|---|---|---|
| 1. | Source | | : | **HCU (Common Stack)** |
| 2. | Height | m | : | 100 (From Ground Level) |
| 3. | Diameter | m | : | 2.34 |
| 4. | Temperature | °c | : | 190 |
| 5. | Velocity | m/s | : | 13.45 |
| 6. | Type of fuel used | | : | Fuel Oil +Fuel Gas |
| 7. | Quantity of fuel used | Kg/hr | : | 108.42 (F.Oil) + 5708.73 (F.Gas) |
| 8. | Gas Flow rate | $Nm^3$/hr. | : | 134070.4 |

| S.No. | Parameters | Unit | | Results | Specification/ SPCB Norms | Method Used |
|---|---|---|---|---|---|---|
| 1. | Particulate Matter | $mg/Nm^3$ | : | 3 | 6 | IS 11255 (Part 1) : 1985 |
| 2. | Sulphur Dioxide($SO_2$) | $mg/Nm^3$ | : | 40.89 | 63 | IS 11255 (Part 2) : 1985 |
| 3. | Oxides of Nitrogen (NOx) | $mg/Nm^3$ | : | 71.45 | 252 | IS 11255 (Part 7) : 2005 |
| 4. | CO | $mg/Nm^3$ | : | 16.23 | 101 | IS 11255 (Part 3): 2008 |
| 5. | Nickel | $mg/Nm^3$ | : | <0.0001 | 5 | USEPA(2000)-Method 29 |
| 6. | $H_2S$ | $mg/Nm^3$ | : | N.D. | N.A. | IS 11255 (Part-4): 2006 |

Remark:(1) Flow Rate for PM – 20 LPM (2) Flow Rate for Gaseous sampling – 2 LPM (3) Calorific Value in Kcal/kg (i) F.Oil – 10264(ii)F.Gas - 12077 (4) The Specification is computed based on the heat supplied by Gas & Liquid Fuels. N.D. - Not Detected.

**Authorized By -**

**Name : Sapana Amin** | **Designation : Lab Incharge**

NOTE:
1) Reports may be reproduced, if required, but only in full and only with written approval of the laboratory.
2) Re analysis of sample will be done, if requested within 7 days from the date of Reporting of sample if the samples are not consumed during analysis.
3) The results reported above relate to the sample identified under Sample Details.

----------END OF REPORT----------

## LABORATORY TEST REPORT - STACK

**REPORT NO.: SEP23/031/24**

### SAMPLE DETAILS

| | | | |
|---|---|---|---|
| 1. | Name & Address of Client: Bharat Petroleum Corporation Ltd. Bina Refinery, Village: Agasod, Bina - 470124, Dist: Sagar, Madhya Pradesh, India. | | |
| 2. | Sample ID: 2148088246-031SE23SE04 | 3. | Client Representative: Mr. Anil Medhe |
| 4. | Sample Date: 04.09.2023 | 5. | Sampling Location: HCU |
| 6. | Sampling Time: 16:00 hr | 7. | Sampling Duration: 44 Mins |
| 8. | Analysis commenced on: 13.09.2023 | 9. | Analysis Completed on: 15.09.2023 |
| 10. | Reporting Date: 26.09.2023 | 11. | Discipline: Chemical |
| 12. | Sample Collected By: Mr. Jitendra Sirha | 13. | Group: Atmospheric Pollution |
| 14. | Sampling Procedure: IS Method | 15. | Product: Stack Emission |
| 16. | Description of Sample: Sampling Bottles: Sealed √ | Thimble:Packed √ | Bladder: Clamped √ |
| 17. | Sample Received Date: 13.09.2023 | | |

### STACK DETAILS

| S.No. | Parameters | Unit (SI) | | Description |
|---|---|---|---|---|
| 1. | Source | | : | **HCU (Common Stack)** |
| 2. | Height | m | : | 100 (From Ground Level) |
| 3. | Diameter | m | : | 2.34 |
| 4. | Temperature | °c | : | 190 |
| 5. | Velocity | m/s | : | 13.45 |
| 6. | Type of fuel used | | : | Fuel Oil +Fuel Gas |
| 7. | Quantity of fuel used | Kg/hr | : | 108.42 (F.Oil) + 5708.73 (F.Gas) |
| 8. | Gas Flow rate | $Nm^3/hr.$ | : | 134070.4 |

| S.No. | Parameters | Unit | | Results | Specification/ SPCB Norms | Method Used |
|---|---|---|---|---|---|---|
| 1. | Vanadium | $mg/Nm^3$ | : | N.D. | 5 | APHA 23rd Edition 3500-V B |

Remark:(1) Flow Rate for PM – 20 LPM (2) Flow Rate for Gaseous sampling – 2 LPM (3) Calorific Value in Kcal/kg (i) F.Oil – 10264(ii)F.Gas - 12077 (4) The Specification is computed based on the heat supplied by Gas & Liquid Fuels. **N.D. - Not Detected.**

**Authorized By -**

**Name : Sapana Amin** | **Designation : Lab Incharge**

NOTE:
1) Reports may be reproduced, if required, but only in full and only with written approval of the laboratory.
2) Re analysis of sample will be done, if requested within 7 days from the date of Reporting of sample if the samples are not consumed during analysis.
3) The results reported above relate to the sample identified under Sample Details.

----------END OF REPORT----------

## LABORATORY TEST REPORT - STACK

**REPORT NO.: SEP23/031/03 (ULR- TC709923000019165F)**

### SAMPLE DETAILS

| | | | |
|---|---|---|---|
| 1. | Name & Address of Client: Bharat Petroleum Corporation Ltd.<br>Bina Refinery, Village: Agasod, Bina - 470124, Dist: Sagar, Madhya Pradesh, India. | | |
| 2. | Sample ID: 2148088246-031SE23SE03 | 3. | Client Representative: Mr. Anil Medhe |
| 4. | Sample Date: 09.09.2023 | 5. | Sampling Location: HGU |
| 6. | Sampling Time: 12:20 hr | 7. | Sampling Duration: 44 mins |
| 8. | Analysis commenced on: 13.09.2023 | 9. | Analysis Completed on: 15.09.2023 |
| 10. | Reporting Date: 26.09.2023 | 11. | Discipline: Chemical |
| 12. | Sample Collected By: Mr. Jitendra Sinha | 13. | Group: Atmospheric Pollution |
| 14. | Sampling Procedure: IS Method | 15. | Product: Stack Emission |
| 16. | Description of Sample: Sampling Bottles: Sealed √ | Thimble:Packed√ | Bladder: Clamped √ |
| 17. | Sample Received Date: 13.09.2023 | | |

### STACK DETAILS

| S.No. | Parameters | Unit (SI) | | Description |
|---|---|---|---|---|
| 1. | Source | | : | HGU |
| 2. | Height | m | : | 70 (From Ground Level) |
| 3. | Diameter | m | : | 3.1 |
| 4. | Temperature | °c | : | 185 |
| 5. | Velocity | m/s | : | 13.51 |
| 6. | Type of fuel used | | : | Naphtha + Purge Gas |
| 7. | Quantity of fuel used | Kg/hr | : | 9132.3 (N) + 22142.7 (P.Gas) |
| 8. | Gas Flow rate | $Nm^3/hr.$ | : | 238982.3 |

| S.No. | Parameters | Unit | | Results | Specification/ SPCB Norms | Method Used |
|---|---|---|---|---|---|---|
| 1. | Particulate Matter | $mg/Nm^3$ | : | 12 | 42 | IS 11255 (Part 1) : 1985 |
| 2. | Sulphur Dioxide($SO_2$) | $mg/Nm^3$ | : | 14.06 | 712 | IS 11255 (Part 2) : 1985 |
| 3. | Oxides of Nitrogen (NOx) | $mg/Nm^3$ | : | 197.83 | 333 | IS 11255 (Part 7) : 2005 |
| 4. | CO | $mg/Nm^3$ | : | 5.87 | 141 | IS 11255 (Part 3): 2008 |
| 5. | Nickel | $mg/Nm^3$ | : | <0.0001 | 5 | USEPA(2000)-Method 29 |
| 6. | $H_2S$ | $mg/Nm^3$ | : | N.D. | N.A. | IS 11255 (Part-4): 2006 |

Remark:(1) Flow Rate for PM – 25 LPM (2) Flow Rate for Gaseous sampling – 2 LPM (3) Calorific Value in Kcal/kg (i) Naptha –10647 (ii)P.Gas -1290 (4) The Specification is computed based on the heat supplied by Gas & Liquid Fuels. N.D. - Not Detected.

**Authorized By**

**Name : Sapana Amin** | **Designation : Lab Incharge**

NOTE:
1) Reports may be reproduced, if required, but only in full and only with written approval of the laboratory.
2) Re analysis of sample will be done, if requested within 7 days from the date of Reporting of sample if the samples are not consumed during analysis.
3) The results reported above relate to the sample identified under Sample Details.

----------END OF REPORT----------

# KADAM ENVIRONMENTAL CONSULTANTS

An ISO 9001-2015 Certified Company (MoEF Approved)

871/B/3, Near Himalaya Machinery, GIDC Makarpura, Vadodara-10.
Phone : (O) 0265 - 6131000, 6131001


## ENVIRONMENTAL MONITORING REPORT

### LABORATORY TEST REPORT - STACK

**REPORT NO.: SEP23/031/23**

**SAMPLE DETAILS**

| | | | |
|---|---|---|---|
| 1. | Name & Address of Client: Bharat Petroleum Corporation Ltd. Bina Refinery, Village: Agasod, Bina - 470124, Dist: Sagar, Madhya Pradesh, India. | | |
| 2. | Sample ID: 2148088246-031SE23SE03 | 3. | Client Representative: Mr. Anil Medhe |
| 4. | Sample Date: 09.09.2023 | 5. | Sampling Location: HGU |
| 6. | Sampling Time: 12:20 hr | 7. | Sampling Duration: 44 mins |
| 8. | Analysis commenced on: 13.09.2023 | 9. | Analysis Completed on: 15.09.2023 |
| 10. | Reporting Date: 26.09.2023 | 11. | Discipline: Chemical |
| 12. | Sample Collected By: Mr. Jitendra Sinha | 13. | Group: Atmospheric Pollution |
| 14. | Sampling Procedure: IS Method | 15. | Product: Stack Emission |
| 16. | Description of Sample: Sampling Bottles: Sealed √ | Thimble:Packed√ | Bladder: Clamped √ |
| 17. | Sample Received Date: 13.09.2023 | | |

**STACK DETAILS**

| S.No. | Parameters | Unit (SI) | | Description |
|---|---|---|---|---|
| 1. | Source | | : | **HGU** |
| 2. | Height | m | : | 70 (From Ground Level) |
| 3. | Diameter | m | : | 3.1 |
| 4. | Temperature | °c | : | 185 |
| 5. | Velocity | m/s | : | 13.51 |
| 6. | Type of fuel used | | : | Naptha + Purge Gas |
| 7. | Quantity of fuel used | Kg/hr | : | 9132.3 (N) + 22142.7 (P.Gas) |
| 8. | Gas Flow rate | $Nm^3/hr.$ | : | 238982.3 |

| S.No. | Parameters | Unit | | Results | Specification/ SPCB Norms | Method Used |
|---|---|---|---|---|---|---|
| 1. | Vanadium | $mg/Nm^3$ | : | N.D. | 5 | APHA 23rd Edition 3500-V B |

Remark:(1) Flow Rate for PM - 25 LPM (2) Flow Rate for Gaseous sampling - 2 LPM (3) Calorific Value in Kcal/kg (i) Naptha -10647 (i)P.Gas -1290 (4) The Specification is computed based on the heat supplied by Gas & Liquid Fuels. **N.D. - Not Detected.**

**Authorized By -**

**Name : Sapana Amin** | **Designation : Lab Incharge**

NOTE:
1) Reports may be reproduced, if required, but only in full and only with written approval of the laboratory.
2) Re analysis of sample will be done, if requested within 7 days from the date of Reporting of sample if the samples are not consumed during analysis.
3) The results reported above relate to the sample identified under Sample Details.

----------END OF REPORT----------

## LABORATORY TEST REPORT - STACK

**REPORT NO.: SEP23/031/02 (ULR- TC709923000019164F)**

### SAMPLE DETAILS

| | | | |
|---|---|---|---|
| 1. | Name & Address of Client: Bharat Petroleum Corporation Ltd. Bina Refinery, Village: Agasod, Bina - 470124, Dist: Sagar, Madhya Pradesh, India. | | |
| 2. | Sample ID: 2148088246-031SE23SE02 | 3. | Client Representative: Mr. Anil Medhe |
| 4. | Sample Date: 05.09.2023 | 5. | Sampling Location: DCU |
| 6. | Sampling Time: 11:20 hr | 7. | Sampling Duration: 46 Mins |
| 8. | Analysis commenced on: 13.09.2023 | 9. | Analysis Completed on: 15.09.2023 |
| 10. | Reporting Date: 26.09.2023 | 11. | Discipline: Chemical |
| 12. | Sample Collected By: Mr. Jitendra Sinha | 13. | Group: Atmospheric Pollution |
| 14. | Sampling Procedure: IS Method | 15. | Product: Stack Emission |
| 16. | Description of Sample: Sampling Bottles: Sealed √ | Thimble:Packed√ | Bladder: Clamped √ |
| 17. | Sample Received Date: 13.09.2023 | | |

### STACK DETAILS

| S.No. | Parameters | Unit (SI) | | Description |
|---|---|---|---|---|
| 1. | Source | | : | **DCU (Common Stack for Coker Feed Heaters A&B)** |
| 2. | Height | m | : | 60 (From Ground level) |
| 3. | Diameter | m | : | 2.18 |
| 4. | Temperature | °c | : | 210 |
| 5. | Velocity | m/s | : | 12.79 |
| 6. | Type of fuel used | | : | Fuel Oil +Fuel Gas |
| 7. | Quantity of fuel used | Kg/hr | : | 0.0 (F.Oil) + 3873.93 (F.Gas) |
| 8. | Gas Flow rate | $Nm^3$/hr. | : | 106068.9 |

| S.No. | Parameters | Unit | | Results | Specification/ SPCB Norms | Method Used |
|---|---|---|---|---|---|---|
| 1. | Particulate Matter | $mg/Nm^3$ | : | 4 | 5 | IS 11255 (Part 1) : 1985 |
| 2. | Sulphur Dioxide($SO_2$) | $mg/Nm^3$ | : | 40.53 | 50 | IS 11255 (Part 2) : 1985 |
| 3. | Oxides of Nitrogen (NOx) | $mg/Nm^3$ | : | 151.64 | 250 | IS 11255 (Part 7) : 2005 |
| 4. | CO | $mg/Nm^3$ | : | 7.03 | 100 | IS 11255 (Part 3): 2008 |
| 5. | Nickel | $mg/Nm^3$ | : | <0.0001 | 5 | USEPA(2000)-Method 29 |
| 6. | $H_2S$ | $mg/Nm^3$ | : | N.D. | N.A. | IS 11255 (Part-4): 2006 |

Remark:(1) Flow Rate for PM – 20 LPM (2) Flow Rate for Gaseous sampling – 2 LPM (3) Calorific Value in Kcal/kg (i) F.Oil – 10264(ii)F.Gas - 12077 (4) The Specification is computed based on the heat supplied by Gas & Liquid Fuels. N.D. - Not Detected

**Authorized By -**

**Name : Sapana Amin** | **Designation : Lab Incharge**

NOTE: 1) Reports may be reproduced, if required, but only in full and only with written approval of the laboratory.
2) Re analysis of sample will be done, if requested within 7 days from the date of Reporting of sample if the samples are not consumed during analysis.
3) The results reported above relate to the sample identified under Sample Details.

----------END OF REPORT----------

# KADAM ENVIRONMENTAL CONSULTANTS

An ISO 9001-2015 Certified Company (MoEF Approved)

871/B/3, Near Himalaya Machinery, GIDC Makarpura, Vadodara-10.
Phone : (O) 0265 - 6131000, 6131001


## ENVIRONMENTAL MONITORING REPORT

### LABORATORY TEST REPORT - STACK

REPORT NO.: SEP23/031/22

### SAMPLE DETAILS

| | | | |
|---|---|---|---|
| 1. | Name & Address of Client: Bharat Petroleum Corporation Ltd. Bina Refinery, Village: Agasod, Bina - 470124, Dist: Sagar, Madhya Pradesh, India. | | |
| 2. | Sample ID: 2148088246-031SE23SE02 | 3. | Client Representative: Mr. Anil Medhe |
| 4. | Sample Date: 05.09.2023 | 5. | Sampling Location: DCU |
| 6. | Sampling Time: 11:20 hr | 7. | Sampling Duration: 46 Mins |
| 8. | Analysis commenced on: 13.09.2023 | 9. | Analysis Completed on: 15.09.2023 |
| 10. | Reporting Date: 26.09.2023 | 11. | Discipline: Chemical |
| 12. | Sample Collected By: Mr. Jitendra Sinha | 13. | Group: Atmospheric Pollution |
| 14. | Sampling Procedure: IS Method | 15. | Product: Stack Emission |
| 16. | Description of Sample: Sampling Bottles: Sealed √ | Thimble:Packed√ | Bladder: Clamped √ |
| 17. | Sample Received Date: 13.09.2023 | | |

### STACK DETAILS

| S.No. | Parameters | Unit (SI) | | Description |
|---|---|---|---|---|
| 1. | Source | | : | **DCU (Common Stack for Coker Feed Heaters A&B)** |
| 2. | Height | m | : | 60 (From Ground level) |
| 3. | Diameter | m | : | 2.18 |
| 4. | Temperature | °c | : | 210 |
| 5. | Velocity | m/s | : | 12.79 |
| 6. | Type of fuel used | | : | Fuel Oil +Fuel Gas |
| 7. | Quantity of fuel used | Kg/hr | : | 0.0 (F.Oil) + 3873.93 (F.Gas) |
| 8. | Gas Flow rate | $Nm^3/hr.$ | : | 106068.9 |

| S.No. | Parameters | Unit | | Results | Specification/ SPCB Norms | Method Used |
|---|---|---|---|---|---|---|
| 1. | Vanadium | $mg/Nm^3$ | : | N.D. | 5 | APHA 23rd Edition 3500-V B |

Remark:(1) Flow Rate for PM – 20 LPM (2) Flow Rate for Gaseous sampling – 2 LPM (3) Calorific Value in Kcal/kg (i) F.Oil – 10264(ii)F.Gas - 12077 (4) The Specification is computed based on the heat supplied by Gas & Liquid Fuels. **N.D. - Not Detected.**

**Authorized By -**

**Name : Sapana Amin** **Designation : Lab Incharge**

NOTE:
1) Reports may be reproduced, if required, but only in full and only with written approval of the laboratory.
2) Re analysis of sample will be done, if requested within 7 days from the date of Reporting of sample if the samples are not consumed during analysis.
3) The results reported above relate to the sample identified under Sample Details.

----------END OF REPORT----------

## LABORATORY TEST REPORT - STACK

**REPORT NO.: SEP23/031/10 (ULR- TC709923000019172F)**

### SAMPLE DETAILS

| | | | |
|---|---|---|---|
| 1. | Name & Address of Client: Bharat Petroleum Corporation Ltd.<br>Bina Refinery, Village: Agasod, Bina - 470124, Dist: Sagar, Madhya Pradesh, India. | | |
| 2. | Sample ID: 2148088246–031SE23SE10 | 3. | Client Representative: Mr. Anil Medhe |
| 4. | Sample Date: 05.09.2023 | 5. | Sampling Location: CPP Boiler - I |
| 6. | Sampling Time: 12:10 hr | 7. | Sampling Duration: 34 Mins |
| 8. | Analysis commenced on: 13.09.2023 | 9. | Analysis Completed on: 15.09.2023 |
| 10. | Reporting Date: 26.09.2023 | 11. | Discipline: Chemical |
| 12. | Sample Collected By: Mr. Jitendra Sinha | 13. | Group: Atmospheric Pollution |
| 14. | Sampling Procedure: IS Method | 15. | Product: Stack Emission |
| 16. | Description of Sample: | Sampling Bottles: Sealed √ | Thimble:Packed√ / Bladder: Clamped √ |
| 17. | Sample Received Date: 13.09.2023 | | |

### STACK DETAILS

| S.No. | Parameters | Unit (SI) | | Description |
|---|---|---|---|---|
| 1. | Source | | : | **CPP Boiler - I** |
| 2. | Height | m | : | 100 |
| 3. | Diameter | m | : | 3.87 |
| 4. | Temperature | °c | : | 165 |
| 5. | Velocity | m/s | : | 17.78 |
| 6. | Type of fuel used | | : | Pet Coke + Coal |
| 7. | Quantity of fuel used | Kg/hr | : | 286 (Pet Coke) + 35 (Coal) |
| 8. | Gas Flow rate | $Nm^3$/hr. | : | 512945.4 |

| S.No. | Parameters | Unit | | Results | Specification/ SPCB Norms | Method Used |
|---|---|---|---|---|---|---|
| 1. | Particulate Matter | $mg/Nm^3$ | : | 27 | 50 | IS 11255 (Part 1) : 1985 |
| 2. | Sulphur Dioxide($SO_2$) | $mg/Nm^3$ | : | 277.24 | 600 | IS 11255 (Part 2) : 1985 |
| 3. | Oxides of Nitrogen (NOx) | $mg/Nm^3$ | : | 248.80 | 450 | IS 11255 (Part 7) : 2005 |
| 4. | CO | $mg/Nm^3$ | : | 20.39 | N.A. | IS 11255 (Part 3): 2008 |

**Remark: (1) Flow Rate for PM – 21 LPM (2) Flow Rate for Gaseous sampling – 2 LPM.**

**Authorized By -**

**Name : Sapana Amin** | **Designation : Lab Incharge**

NOTE:
1) Reports may be reproduced, if required, but only in full and only with written approval of the laboratory.
2) Re analysis of sample will be done, if requested within 7 days from the date of Reporting of sample if the samples are not consumed during analysis.
3) The results reported above relate to the sample identified under Sample Details.

----------END OF REPORT----------

## LABORATORY TEST REPORT - STACK

**REPORT NO.: SEP23/031/30**

### SAMPLE DETAILS

| | | | |
|---|---|---|---|
| 1. | Name & Address of Client: Bharat Petroleum Corporation Ltd. Bina Refinery, Village: Agasod, Bina - 470124, Dist: Sagar, Madhya Pradesh, India. | | |
| 2. | Sample ID: 2148088246-031SE23SE10 | 3. | Client Representative: Mr. Anil Medhe |
| 4. | Sample Date: 08.09.2023 | 5. | Sampling Location: CPP Boiler - I |
| 6. | Sampling Time: 12:10 hr | 7. | Sampling Duration: 34 Mins |
| 8. | Analysis commenced on: 13.09.2023 | 9. | Analysis Completed on: 15.09.2023 |
| 10. | Reporting Date: 26.09.2023 | 11. | Discipline: Chemical |
| 12. | Sample Collected By: Mr. Jitendra Sinha | 13. | Group: Atmospheric Pollution |
| 14. | Sampling Procedure: IS Method | 15. | Product: Stack Emission |
| 16. | Description of Sample: Sampling Bottles: Sealed √ | Thimble:Packed√ | Bladder: Clamped √ |
| 17. | Sample Received Date: 13.09.2023 | | |

### STACK DETAILS

| S.No. | Parameters | Unit (SI) | | Description |
|---|---|---|---|---|
| 1. | Source | | : | **CPP Boiler - I** |
| 2. | Height | m | : | 100 |
| 3. | Diameter | m | : | 3.87 |
| 4. | Temperature | °c | : | 165 |
| 5. | Velocity | m/s | : | 17.78 |
| 6. | Type of fuel used | | : | Pet Coke + Coal |
| 7. | Quantity of fuel used | Kg/hr | : | 286 (Pet Coke) + 35 (Coal) |
| 8. | Gas Flow rate | $Nm^3/hr.$ | : | 512945.4 |

| S.No. | Parameters | Unit | | Results | Specification/ SPCB Norms | Method Used |
|---|---|---|---|---|---|---|
| 1. | Mercury | $mg/Nm^3$ | : | <0.02 | 0.03 | APHA 23rd Edition 3112-B |

**Remark: (1) Flow Rate for PM – 21 LPM (2) Flow Rate for Gaseous sampling – 2 LPM.**

**Authorized By -**

**Name : Sapana Amin** | **Designation : Lab Incharge**

NOTE:
1) Reports may be reproduced, if required, but only in full and only with written approval of the laboratory.
2) Re analysis of sample will be done, if requested within 7 days from the date of Reporting of sample if the samples are not consumed during analysis.
3) The results reported above relate to the sample identified under Sample Details.

----------END OF REPORT----------

## LABORATORY TEST REPORT - STACK

REPORT NO.: SEP23/031/20 (ULR- TC709923000019182F)

### SAMPLE DETAILS

| | | | |
|---|---|---|---|
| 1. | Name & Address of Client: Bharat Petroleum Corporation Ltd.<br>Bina Refinery, Village: Agasod, Bina - 470124, Dist: Sagar, Madhya Pradesh, India. | | |
| 2. | Sample ID: 2148088246-031SE23SE20 | 3. | Client Representative: Mr. Anil Medhe |
| 4. | Sample Date: 08.09.2023 | 5. | Sampling Location: CPP Boiler - II |
| 6. | Sampling Time: - | 7. | Sampling Duration: - |
| 8. | Analysis commenced on: - | 9. | Analysis Completed on: - |
| 10. | Reporting Date: 26.09.2023 | 11. | Discipline: Chemical |
| 12. | Sample Collected By: Mr. Jitendra Sinha | 13. | Group: Atmospheric Pollution |
| 14. | Sampling Procedure: IS Method | 15. | Product: Stack Emission |
| 16. | Description of Sample: Sampling Bottles: Sealed √ | Thimble:Packed√ | Bladder: Clamped √ |
| 17. | Sample Received Date: - | | |

### STACK DETAILS

| S.No. | Parameters | Unit (SI) | | Description |
|---|---|---|---|---|
| 1. | Source | | : | **CPP Boiler - II** |
| 2. | Height | m | : | 100 |
| 3. | Diameter | m | : | 3.87 |
| 4. | Temperature | °c | : | - |
| 5. | Velocity | m/s | : | - |
| 6. | Type of fuel used | | : | Pet Coke + Coal |
| 7. | Quantity of fuel used | Kg/hr | : | - |
| 8. | Gas Flow rate | $Nm^3/hr.$ | : | - |

| S.No. | Parameters | Unit | | Results | Specification/ SPCB Norms | Method Used |
|---|---|---|---|---|---|---|
| 1. | Particulate Matter | $mg/Nm^3$ | : | - | 50 | IS 11255 (Part 1) : 1985 |
| 2. | Sulphur Dioxide($SO_2$) | $mg/Nm^3$ | : | - | 600 | IS 11255 (Part 2) : 1985 |
| 3. | Oxides of Nitrogen (NOx) | $mg/Nm^3$ | : | - | 450 | IS 11255 (Part 7) : 2005 |
| 4. | CO | $mg/Nm^3$ | : | - | N.A. | IS 11255 (Part 3): 2008 |

**Remark: Boiler was under Shutdown during the sampling period.**

**Authorized By -**

**Name : Sapana Amin** | **Designation : Lab Incharge**

NOTE:
1) Reports may be reproduced, if required, but only in full and only with written approval of the laboratory.
2) Re analysis of sample will be done, if requested within 7 days from the date of Reporting of sample if the samples are not consumed during analysis.
3) The results reported above relate to the sample identified under Sample Details.

----------END OF REPORT----------

# KADAM ENVIRONMENTAL CONSULTANTS

An ISO 9001-2015 Certified Company (MoEF Approved)

871/B/3, Near Himalaya Machinery, GIDC Makarpura, Vadodara-10.
Phone : (O) 0265 - 6131000, 6131001


## ENVIRONMENTAL MONITORING REPORT

### LABORATORY TEST REPORT - STACK

**REPORT NO.: SEP23/031/34**

**SAMPLE DETAILS**

| | | | | |
|---|---|---|---|---|
| 1. | Name & Address of Client: Bharat Petroleum Corporation Ltd.<br>Bina Refinery, Village: Agasod, Bina - 470124, Dist: Sagar, Madhya Pradesh, India. | | | |
| 2. | Sample ID: 2148088246–031SE23SE20 | 3. | Client Representative: Mr. Anil Medhe | |
| 4. | Sample Date: 08.09.2023 | 5. | Sampling Location: CPP Boiler - II | |
| 6. | Sampling Time: - | 7. | Sampling Duration: - | |
| 8. | Analysis commenced on: - | 9. | Analysis Completed on: - | |
| 10. | Reporting Date: 26.09.2023 | 11. | Discipline: Chemical | |
| 12. | Sample Collected By: Mr. Jitendra Sinha | 13. | Group: Atmospheric Pollution | |
| 14. | Sampling Procedure: IS Method | 15. | Product: Stack Emission | |
| 16. | Description of Sample: | Sampling Bottles: Sealed √ | Thimble:Packed√ | Bladder: Clamped √ |
| 17. | Sample Received Date: - | | | |

**STACK DETAILS**

| S.No. | Parameters | Unit (SI) | | Description |
|---|---|---|---|---|
| 1. | Source | | : | **CPP Boiler - II** |
| 2. | Height | m | : | 100 |
| 3. | Diameter | m | : | 3.87 |
| 4. | Temperature | °C | : | - |
| 5. | Velocity | m/s | : | - |
| 6. | Type of fuel used | | : | Pet Coke + Coal |
| 7. | Quantity of fuel used | Kg/hr | : | - |
| 8. | Gas Flow rate | $Nm^3/hr.$ | : | - |

| S.No. | Parameters | Unit | | Results | Specification/ SPCB Norms | Method Used |
|---|---|---|---|---|---|---|
| 1. | Mercury | $mg/Nm^3$ | : | - | 0.03 | APHA 23rd Edition 3112-B |

**Remark: Boiler was under Shutdown during the sampling period.**

**Authorized By -**

**Name : Sapana Amin** | **Designation : Lab Incharge**

NOTE:
1) Reports may be reproduced, if required, but only in full and only with written approval of the laboratory.
2) Re analysis of sample will be done, if requested within 7 days from the date of Reporting of sample if the samples are not consumed during analysis.
3) The results reported above relate to the sample identified under Sample Details.

----------END OF REPORT----------

## LABORATORY TEST REPORT - STACK

**REPORT NO.: SEP23/031/11 (ULR- TC709923000019173F)**

### SAMPLE DETAILS

| | | | |
|---|---|---|---|
| 1. | Name & Address of Client: Bharat Petroleum Corporation Ltd.<br>Bina Refinery, Village: Agasod, Bina - 470124, Dist: Sagar, Madhya Pradesh, India. | | |
| 2. | Sample ID: 2148088246-031SE23SE11 | 3. | Client Representative: Mr. Anil Medhe |
| 4. | Sample Date: 08.09.2023 | 5. | Sampling Location: CPP Boiler - III |
| 6. | Sampling Time: 13:00 hr | 7. | Sampling Duration: 36 Mins |
| 8. | Analysis commenced on: 13.09.2023 | 9. | Analysis Completed on: 15.09.2023 |
| 10. | Reporting Date: 26.09.2023 | 11. | Discipline: Chemical |
| 12. | Sample Collected By: Mr. Jitendra Sinha | 13. | Group: Atmospheric Pollution |
| 14. | Sampling Procedure: IS Method | 15. | Product: Stack Emission |
| 16. | Description of Sample: | Sampling Bottles: Sealed √ | Thimble:Packed√ / Bladder: Clamped √ |
| 17. | Sample Received Date: 13.09.2023 | | |

### STACK DETAILS

| S.No. | Parameters | Unit (SI) | | Description |
|---|---|---|---|---|
| 1. | Source | | : | **CPP Boiler - III** |
| 2. | Height | m | : | 100 |
| 3. | Diameter | m | : | 3.87 |
| 4. | Temperature | °c | : | 158 |
| 5. | Velocity | m/s | : | 16.68 |
| 6. | Type of fuel used | | : | Pet Coke + Coal |
| 7. | Quantity of fuel used | Kg/hr | : | 286 (Pet Coke) + 35 (Coal) |
| 8. | Gas Flow rate | $Nm^3$/hr. | : | 488893.0 |

| S.No. | Parameters | Unit | | Results | Specification/ SPCB Norms | Method Used |
|---|---|---|---|---|---|---|
| 1. | Particulate Matter | $mg/Nm^3$ | : | 32 | 50 | IS 11255 (Part 1) : 1985 |
| 2. | Sulphur Dioxide($SO_2$) | $mg/Nm^3$ | : | 372.21 | 600 | IS 11255 (Part 2) : 1985 |
| 3. | Oxides of Nitrogen (NOx) | $mg/Nm^3$ | : | 178.62 | 450 | IS 11255 (Part 7) : 2005 |
| 4. | CO | $mg/Nm^3$ | : | 22.87 | N.A. | IS 11255 (Part 3): 2008 |

**Remark: (1) Flow Rate for PM – 21 LPM (2) Flow Rate for Gaseous sampling – 2 LPM.**

**Authorized By**

**Name : Sapana Amin** | **Designation : Lab Incharge**

NOTE:
1) Reports may be reproduced, if required, but only in full and only with written approval of the laboratory.
2) Re analysis of sample will be done, if requested within 7 days from the date of Reporting of sample if the samples are not consumed during analysis.
3) The results reported above relate to the sample identified under Sample Details.

----------END OF REPORT----------

# KADAM ENVIRONMENTAL CONSULTANTS

An ISO 9001-2015 Certified Company (MoEF Approved)

871/B/3, Near Himalaya Machinery, GIDC Makarpura, Vadodara-10.
Phone : (O) 0265 - 6131000, 6131001


## ENVIRONMENTAL MONITORING REPORT

### LABORATORY TEST REPORT - STACK

REPORT NO.: SEP23/031/31

### SAMPLE DETAILS

| | | | |
|---|---|---|---|
| 1. | Name & Address of Client: Bharat Petroleum Corporation Ltd. Bina Refinery, Village: Agasod, Bina - 470124, Dist: Sagar, Madhya Pradesh, India. | | |
| 2. | Sample ID: 2148088246-031SE23SE11 | 3. | Client Representative: Mr. Anil Medhe |
| 4. | Sample Date: 08.09.2023 | 5. | Sampling Location: CPP Boiler - III |
| 6. | Sampling Time: 13:00 hr | 7. | Sampling Duration: 36 Mins |
| 8. | Analysis commenced on: 13.09.2023 | 9. | Analysis Completed on: 15.09.2023 |
| 10. | Reporting Date: 26.09.2023 | 11. | Discipline: Chemical |
| 12. | Sample Collected By: Mr. Jitendra Sinha | 13. | Group: Atmospheric Pollution |
| 14. | Sampling Procedure: IS Method | 15. | Product: Stack Emission |
| 16. | Description of Sample: Sampling Bottles: Sealed √ | Thimble:Packed√ | Bladder: Clamped √ |
| 17. | Sample Received Date: 13.09.2023 | | |

### STACK DETAILS

| S.No. | Parameters | Unit (SI) | | Description |
|---|---|---|---|---|
| 1. | Source | | : | **CPP Boiler - III** |
| 2. | Height | m | : | 100 |
| 3. | Diameter | m | : | 3.87 |
| 4. | Temperature | °c | : | 158 |
| 5. | Velocity | m/s | : | 16.68 |
| 6. | Type of fuel used | | : | Pet Coke + Coal |
| 7. | Quantity of fuel used | Kg/hr | : | 286 (Pet Coke) + 35 (Coal) |
| 8. | Gas Flow rate | $Nm^3/hr.$ | : | 488893.0 |

| S.No. | Parameters | Unit | | Results | Specification/ SPCB Norms | Method Used |
|---|---|---|---|---|---|---|
| 1. | Mercury | $mg/Nm^3$ | : | <0.02 | 0.03 | APHA 23rd Edition 3112-B |

**Remark: (1) Flow Rate for PM – 21 LPM (2) Flow Rate for Gaseous sampling – 2 LPM.**

**Authorized By -**

**Name : Sapana Amin** **Designation : Lab Incharge**

NOTE:
1) Reports may be reproduced, if required, but only in full and only with written approval of the laboratory.
2) Re analysis of sample will be done, if requested within 7 days from the date of Reporting of sample if the samples are not consumed during analysis.
3) The results reported above relate to the sample identified under Sample Details.

----------END OF REPORT----------

## LABORATORY TEST REPORT - STACK

**REPORT NO.: SEP23/031/09 (ULR- TC709923000019171F)**

### SAMPLE DETAILS

| | | | |
|---|---|---|---|
| 1. | Name & Address of Client: Bharat Petroleum Corporation Ltd.<br>Bina Refinery, Village: Agasod, Bina - 470124, Dist: Sagar, Madhya Pradesh, India. | | |
| 2. | Sample ID: 2148088246–031SE23SE09 | 3. | Client Representative: Mr. Anil Medhe |
| 4. | Sample Date: 05.09.2023 | 5. | Sampling Location: SRU |
| 6. | Sampling Time: 09:30 hr | 7. | Sampling Duration: 46 Mins |
| 8. | Analysis commenced on: 13.09.2023 | 9. | Analysis Completed on: 15.09.2023 |
| 10. | Reporting Date: 26.09.2023 | 11. | Discipline: Chemical |
| 12. | Sample Collected By: Mr. Jitendra Sinha | 13. | Group: Atmospheric Pollution |
| 14. | Sampling Procedure: IS Method | 15. | Product: Stack Emission |
| 16. | Description of Sample: Sampling Bottles: Sealed √ | Thimble:Packed | Bladder: Clamped √ |
| 17. | Sample Received Date: 13.09.2023 | | |

### STACK DETAILS

| S.No. | Parameters | Unit (SI) | | Description |
|---|---|---|---|---|
| 1. | Source | | : | **SRU** |
| 2. | Height | m | : | 80 |
| 3. | Diameter | m | : | 1.23 |
| 4. | Temperature | °c | : | 270 |
| 5. | Velocity | m/s | : | 12.99 |
| 6. | Type of fuel used | | : | Fuel Gas |
| 7. | Quantity of fuel used | Kg/hr | : | 361.539 (F.Gas) |
| 8. | Gas Flow rate | $Nm^3/hr.$ | : | 30503.7 |

| S.No. | Parameters | Unit | | Results | Specification/ SPCB Norms | Method Used |
|---|---|---|---|---|---|---|
| 1. | Particulate Matter | $mg/Nm^3$ | : | 7 | N.A. | IS 11255 (Part 1) : 1985 |
| 2. | Sulphur Dioxide($SO_2$) | $mg/Nm^3$ | : | 185.67 | N.A. | IS 11255 (Part 2) : 1985 |
| 3. | Oxides of Nitrogen (NOx) | $mg/Nm^3$ | : | 63.31 | 250 | IS 11255 (Part 7) : 2005 |
| 4. | CO | $mg/Nm^3$ | : | 4.44 | 100 | IS 11255 (Part 3): 2008 |
| 5. | Nickel | $mg/Nm^3$ | : | <0.0001 | N.A | USEPA(2000)-Method 29 |
| 6. | $H_2S$ | $mg/Nm^3$ | : | 3.96 | 10 | IS 11255 (Part-4): 2006 |

Remark:(1) Flow Rate for PM – 21 LPM (2) Flow Rate for Gaseous sampling – 2 LPM (3) Calorific Value in Kcal/kg (i) F.Oil – 10264(ii)F.Gas - 12077 (4) The Specification is computed based on the heat supplied by Gas & Liquid Fuels.

**Authorized By -**

**Name : Sapana Amin** | **Designation : Lab Incharge**

NOTE:
1) Reports may be reproduced, if required, but only in full and only with written approval of the laboratory.
2) Re analysis of sample will be done, if requested within 7 days from the date of Reporting of sample if the samples are not consumed during analysis.
3) The results reported above relate to the sample identified under Sample Details.

----------END OF REPORT----------

# KADAM ENVIRONMENTAL CONSULTANTS

An ISO 9001-2015 Certified Company (MoEF Approved)

871/B/3, Near Himalaya Machinery, GIDC Makarpura, Vadodara-10.
Phone : (O) 0265 - 6131000, 6131001


## ENVIRONMENTAL MONITORING REPORT

### LABORATORY TEST REPORT - STACK

**REPORT NO.: SEP23/031/29**

**SAMPLE DETAILS**

| | | | |
|---|---|---|---|
| 1. | Name & Address of Client: Bharat Petroleum Corporation Ltd. Bina Refinery, Village: Agasod, Bina - 470124, Dist: Sagar, Madhya Pradesh, India. | | |
| 2. | Sample ID: 2148088246-031SE23SE09 | 3. | Client Representative: Mr. Anil Medhe |
| 4. | Sample Date: 05.09.2023 | 5. | Sampling Location: SRU |
| 6. | Sampling Time: 09:30 hr | 7. | Sampling Duration: 46 Mins |
| 8. | Analysis commenced on: 13.09.2023 | 9. | Analysis Completed on: 15.09.2023 |
| 10. | Reporting Date: 26.09.2023 | 11. | Discipline: Chemical |
| 12. | Sample Collected By: Mr. Jitendra Sinha | 13. | Group: Atmospheric Pollution |
| 14. | Sampling Procedure: IS Method | 15. | Product: Stack Emission |
| 16. | Description of Sample: Sampling Bottles: Sealed √ | Thimble:Packed√ | Bladder: Clamped √ |
| 17. | Sample Received Date: 13.09.2023 | | |

**STACK DETAILS**

| S.No. | Parameters | Unit (SI) | | Description |
|---|---|---|---|---|
| 1. | Source | | : | **SRU** |
| 2. | Height | m | : | 80 |
| 3. | Diameter | m | : | 1.23 |
| 4. | Temperature | °c | : | 270 |
| 5. | Velocity | m/s | : | 12.99 |
| 6. | Type of fuel used | | : | Fuel Gas |
| 7. | Quantity of fuel used | Kg/hr | : | 361.539 (F.Gas) |
| 8. | Gas Flow rate | $Nm^3/hr.$ | : | 30503.7 |

| S.No. | Parameters | Unit | | Results | Specification/ SPCB Norms | Method Used |
|---|---|---|---|---|---|---|
| 1. | Vanadium | $mg/Nm^3$ | : | N.D. | 5 | APHA 23rd Edition 3500-V B |

Remark:(1) Flow Rate for PM – 21 LPM (2) Flow Rate for Gaseous sampling – 2 LPM (3) Calorific Value in Kcal/kg (i) F.Oil – 10264(ii)F.Gas - 12077 (4) The Specification is computed based on the heat supplied by Gas & Liquid Fuels. **N.D. - Not Detected.**

**Authorized By -**

**Name : Sapana Amin** **Designation : Lab Incharge**

NOTE:
1) Reports may be reproduced, if required, but only in full and only with written approval of the laboratory.
2) Re analysis of sample will be done, if requested within 7 days from the date of Reporting of sample if the samples are not consumed during analysis.
3) The results reported above relate to the sample identified under Sample Details.

----------END OF REPORT----------

## LABORATORY TEST REPORT - STACK

**REPORT NO.: SEP23/031/13 (ULR- TC709923000019175F)**

### SAMPLE DETAILS

| | | | |
|---|---|---|---|
| 1. | Name & Address of Client: Bharat Petroleum Corporation Ltd. Bina Refinery, Village: Agasod, Bina - 470124, Dist: Sagar, Madhya Pradesh, India. | | |
| 2. | Sample ID: 2148088246–031SE23SE13 | 3. | Client Representative: Mr. Anil Medhe |
| 4. | Sample Date: 04.09.2023 | 5. | Sampling Location: KHDS |
| 6. | Sampling Time: 17:10 hr | 7. | Sampling Duration: 44 Mins |
| 8. | Analysis commenced on: 13.09.2023 | 9. | Analysis Completed on: 15.09.2023 |
| 10. | Reporting Date: 26.09.2023 | 11. | Discipline: Chemical |
| 12. | Sample Collected By: Mr. Jitendra Sinha | 13. | Group: Atmospheric Pollution |
| 14. | Sampling Procedure: IS Method | 15. | Product: Stack Emission |
| 16. | Description of Sample: Sampling Bottles: Sealed √ | Thimble:Packed√ | Bladder: Clamped √ |
| 17. | Sample Received Date: 13.09.2023 | | |

### STACK DETAILS

| S.No. | Parameters | Unit (SI) | | Description |
|---|---|---|---|---|
| 1. | Source | | : | **KHDS** |
| 2. | Height | m | : | 60 |
| 3. | Diameter | m | : | 1.59 |
| 4. | Temperature | °c | : | 192 |
| 5. | Velocity | m/s | : | 13.61 |
| 6. | Type of fuel used | | : | Fuel Oil + Fuel Gas |
| 7. | Quantity of fuel used | Kg/hr | : | 1.251 (F.Oil) + 449.943 (F.Gas) |
| 8. | Gas Flow rate | $Nm^3$/hr. | : | 62380.5 |

| S.No. | Parameters | Unit | | Results | Specification/ SPCB Norms | Method Used |
|---|---|---|---|---|---|---|
| 1. | Particulate Matter | $mg/Nm^3$ | : | 4 | 5 | IS 11255 (Part 1) : 1985 |
| 2. | Sulphur Dioxide($SO_2$) | $mg/Nm^3$ | : | 40.79 | 52 | IS 11255 (Part 2) : 1985 |
| 3. | Oxides of Nitrogen (NOx) | $mg/Nm^3$ | : | 190.91 | 250 | IS 11255 (Part 7) : 2005 |
| 4. | CO | $mg/Nm^3$ | : | 4.41 | 100 | IS 11255 (Part 3): 2008 |
| 5. | Nickel | $mg/Nm^3$ | : | <0.0001 | N.A. | USEPA(2000)-Method 29 |
| 6. | $H_2S$ | $mg/Nm^3$ | : | N.D. | N.A. | IS 11255 (Part-4): 2006 |

**Remark: (1) Flow Rate for PM – 21 LPM (2) Flow Rate for Gaseous sampling – 2 LPM. / N.D. - Not Detected.**

**Authorized By -**

**Name : Sapana Amin** | **Designation : Lab Incharge**

NOTE:
1) Reports may be reproduced, if required, but only in full and only with written approval of the laboratory.
2) Re analysis of sample will be done, if requested within 7 days from the date of Reporting of sample if the samples are not consumed during analysis.
3) The results reported above relate to the sample identified under Sample Details.

----------END OF REPORT----------

# KADAM ENVIRONMENTAL CONSULTANTS

An ISO 9001-2015 Certified Company (MoEF Approved)

871/B/3, Near Himalaya Machinery, GIDC Makarpura, Vadodara-10.
Phone : (O) 0265 - 6131000, 6131001


## ENVIRONMENTAL MONITORING REPORT

### LABORATORY TEST REPORT - STACK

REPORT NO.: SEP23/031/33

### SAMPLE DETAILS

| | | | |
|---|---|---|---|
| 1. | Name & Address of Client: Bharat Petroleum Corporation Ltd.<br>Bina Refinery, Village: Agasod, Bina - 470124, Dist: Sagar, Madhya Pradesh, India. | | |
| 2. | Sample ID: 2148088246-031SE23SE13 | 3. | Client Representative: Mr. Anil Medhe |
| 4. | Sample Date: 04.09.2023 | 5. | Sampling Location: KHDS |
| 6. | Sampling Time: 17:10 hr | 7. | Sampling Duration: 44 Mins |
| 8. | Analysis commenced on: 13.09.2023 | 9. | Analysis Completed on: 15.09.2023 |
| 10. | Reporting Date: 26.09.2023 | 11. | Discipline: Chemical |
| 12. | Sample Collected By: Mr. Jitendra Sinha | 13. | Group: Atmospheric Pollution |
| 14. | Sampling Procedure: IS Method | 15. | Product: Stack Emission |
| 16. | Description of Sample: | Sampling Bottles: Sealed √ | Thimble:Packed√ / Bladder: Clamped √ |
| 17. | Sample Received Date: 13.09.2023 | | |

### STACK DETAILS

| S.No. | Parameters | Unit (SI) | | Description |
|---|---|---|---|---|
| 1. | Source | | : | **KHDS** |
| 2. | Height | m | : | 60 |
| 3. | Diameter | m | : | 1.59 |
| 4. | Temperature | °c | : | 192 |
| 5. | Velocity | m/s | : | 13.61 |
| 6. | Type of fuel used | | : | Fuel Oil + Fuel Gas |
| 7. | Quantity of fuel used | Kg/hr | : | 1.251 (F.Oil) + 449.943 (F.Gas) |
| 8. | Gas Flow rate | $Nm^3/hr.$ | : | 62380.5 |

| S.No. | Parameters | Unit | | Results | Specification/ SPCB Norms | Method Used |
|---|---|---|---|---|---|---|
| 1. | Vanadium | $mg/Nm^3$ | : | N.D. | 5 | APHA 23rd Edition 3500-V B |

Remark:(1) Flow Rate for PM – 21 LPM (2) Flow Rate for Gaseous sampling – 2 LPM (3) Calorific Value in Kcal/kg (i) F.Oil – 10264(ii)F.Gas - 12077 (4) The Specification is computed based on the heat supplied by Gas & Liquid Fuels. **N.D. - Not Detected.**

**Authorized By -**

**Name : Sapana Amin** | **Designation : Lab Incharge**

NOTE:
1) Reports may be reproduced, if required, but only in full and only with written approval of the laboratory.
2) Re analysis of sample will be done, if requested within 7 days from the date of Reporting of sample if the samples are not consumed during analysis.
3) The results reported above relate to the sample identified under Sample Details.

----------END OF REPORT----------

## LABORATORY TEST REPORT - STACK

**REPORT NO.: SEP23/031/12 (ULR- TC709923000019174F)**

### SAMPLE DETAILS

| | | | |
|---|---|---|---|
| 1. | Name & Address of Client: Bharat Petroleum Corporation Ltd.<br>Bina Refinery, Village: Agasod, Bina - 470124, Dist: Sagar, Madhya Pradesh, India. | | |
| 2. | Sample ID: 2146088246-031SE23SE12 | 3. | Client Representative: Mr. Anil Medhe |
| 4. | Sample Date: 08.09.2023 | 5. | Sampling Location: Utility Boiler |
| 6. | Sampling Time: 09:30 hr | 7. | Sampling Duration: 53 Mins |
| 8. | Analysis commenced on: 13.09.2023 | 9. | Analysis Completed on: 15.09.2023 |
| 10. | Reporting Date: 26.09.2023 | 11. | Discipline: Chemical |
| 12. | Sample Collected By: Mr. Jitendra Sinha | 13. | Group: Atmospheric Pollution |
| 14. | Sampling Procedure: IS Method | 15. | Product: Stack Emission |
| 16. | Description of Sample: | Sampling Bottles: Sealed √ | Thimble:Packed√ / Bladder: Clamped √ |
| 17. | Sample Received Date: 13.09.2023 | | |

### STACK DETAILS

| S.No. | Parameters | Unit (SI) | | Description |
|---|---|---|---|---|
| 1. | Source | | : | **Utility Boiler** |
| 2. | Height | m | : | 123 |
| 3. | Diameter | m | : | 2.67 |
| 4. | Temperature | °c | : | 113 |
| 5. | Velocity | m/s | : | 11.02 |
| 6. | Type of fuel used | | : | Fuel Oil + Fuel Gas |
| 7. | Quantity of fuel used | Kg/hr | : | 504.57 (F.Oil) + 4987.32 (F.Gas) |
| 8. | Gas Flow rate | $Nm^3$/hr. | : | 171530.3 |

| S.No. | Parameters | Unit | | Results | Specification/ SPCB Norms | Method Used |
|---|---|---|---|---|---|---|
| 1. | Particulate Matter | $mg/Nm^3$ | : | 8 | 9 | IS 11255 (Part 1) : 1985 |
| 2. | Sulphur Dioxide($SO_2$) | $mg/Nm^3$ | : | 84.34 | 113 | IS 11255 (Part 2) : 1985 |
| 3. | Oxides of Nitrogen (NOx) | $mg/Nm^3$ | : | 149.72 | 258 | IS 11255 (Part 7) : 2005 |
| 4. | CO | $mg/Nm^3$ | : | 10.85 | 104 | IS 11255 (Part 3): 2008 |
| 5. | Nickel | $mg/Nm^3$ | : | <0.0001 | N.A | USEPA(2000)-Method 29 |

**Remark: (1) Flow Rate for PM – 21 LPM (2) Flow Rate for Gaseous sampling – 2 LPM.**

**Authorized By -**

**Name : Sapana Amin** | **Designation : Lab Incharge**

NOTE:
1) Reports may be reproduced, if required, but only in full and only with written approval of the laboratory.
2) Re analysis of sample will be done, if requested within 7 days from the date of Reporting of sample if the samples are not consumed during analysis.
3) The results reported above relate to the sample identified under Sample Details.

----------END OF REPORT----------

# KADAM ENVIRONMENTAL CONSULTANTS

An ISO 9001-2015 Certified Company (MoEF Approved)

871/B/3, Near Himalaya Machinery, GIDC Makarpura, Vadodara-10.
Phone : (O) 0265 - 6131000, 6131001


## ENVIRONMENTAL MONITORING REPORT

### LABORATORY TEST REPORT - STACK

**REPORT NO.: SEP23/031/32**

**SAMPLE DETAILS**

| | | | |
|---|---|---|---|
| 1. | Name & Address of Client: Bharat Petroleum Corporation Ltd. Bina Refinery, Village: Agasod, Bina - 470124, Dist: Sagar, Madhya Pradesh, India. | | |
| 2. | Sample ID: 2148088246-031SE23SE12 | 3. | Client Representative: Mr. Anil Medhe |
| 4. | Sample Date: 08.09.2023 | 5. | Sampling Location: Utility Boiler |
| 6. | Sampling Time: 09:30 hr | 7. | Sampling Duration: 53 Mins |
| 8. | Analysis commenced on: 13.09.2023 | 9. | Analysis Completed on: 15.09.2023 |
| 10. | Reporting Date: 26.09.2023 | 11. | Discipline: Chemical |
| 12. | Sample Collected By: Mr. Jitendra Sinha | 13. | Group: Atmospheric Pollution |
| 14. | Sampling Procedure: IS Method | 15. | Product: Stack Emission |
| 16. | Description of Sample: Sampling Bottles: Sealed √ | Thimble:Packed√ | Bladder: Clamped √ |
| 17. | Sample Received Date: 13.09.2023 | | |

**STACK DETAILS**

| S.No. | Parameters | Unit (SI) | | Description |
|---|---|---|---|---|
| 1. | Source | | : | **Utility Boiler** |
| 2. | Height | m | : | 123 |
| 3. | Diameter | m | : | 2.67 |
| 4. | Temperature | °c | : | 113 |
| 5. | Velocity | m/s | : | 11.02 |
| 6. | Type of fuel used | | : | Fuel Oil + Fuel Gas |
| 7. | Quantity of fuel used | Kg/hr | : | 504.57 (F.Oil) + 4987.32 (F.Gas) |
| 8. | Gas Flow rate | $Nm^3/hr.$ | : | 171530.3 |

| S.No. | Parameters | Unit | | Results | Specification/ SPCB Norms | Method Used |
|---|---|---|---|---|---|---|
| 1. | Vanadium | $mg/Nm^3$ | : | N.D. | 5 | APHA 23rd Edition 3500-V B |

Remark:(1) Flow Rate for PM – 21 LPM (2) Flow Rate for Gaseous sampling – 2 LPM. (3) Calorific Value in Kcal/kg (i) F.Oil – 10264(ii)F.Gas - 12077

**Authorized By -**

**Name : Sapana Amin** **Designation : Lab Incharge**

NOTE:
1) Reports may be reproduced, if required, but only in full and only with written approval of the laboratory.
2) Re analysis of sample will be done, if requested within 7 days from the date of Reporting of sample if the samples are not consumed during analysis.
3) The results reported above relate to the sample identified under Sample Details.

----------END OF REPORT----------

KADAM ENVIRONMENTAL CONSULTANTS
An ISO 9001-2015 Certified Company (MoEF Approved)
871/B/3, Near Himalaya Machinery, GIDC Makarpura, Vadodara-10.
Phone : (O) 0265 - 6131000, 6131001

TC-7089

## ENVIRONMENTAL MONITORING REPORT

### LABORATORY TEST REPORT - STACK EMMISION

**REPORT NO.: AUG23/098/01 (ULR- TC709923000016700F)**

### SAMPLE DETAILS

| | | | |
|---|---|---|---|
| 1. | Name & Address of Client: Bharat Petroleum Corporation Ltd. Bina Refinery, Village: Agasod, Bina - 470124, Dist: Sagar, Madhya Pradesh, India. | | |
| 2. | Sample ID: 2148088246–098AU23SE01 | 3. | Client Representative: Mr. Anil Medhe |
| 4. | Sample Date: 16.08.2023 | 5. | Sampling Location: CDU/VDU |
| 6. | Sampling Time: 16:10 hr | 7. | Sampling Duration: 46 Mins |
| 8. | Analysis commenced on: 21.08.2023 | 9. | Analysis Completed on: 21.08.2023 |
| 10. | Reporting Date: 28.08.2023 | 11. | Discipline: Chemical |
| 12. | Sample Collected By: Mr. Jitendra Sinha | 13. | Group: Atmospheric Pollution |
| 14. | Sampling Procedure: IS: 11255 Method | 15. | Product: Stack Emission |
| 16. | Description of Sample: Sampling Bottles: Sealed √ | Thimble: Packed √ | Bladder: Clamped √ |
| 17. | Sample Received Date: 21.08.2023 | | |

### STACK DETAILS

| S.No. | Parameters | Unit (SI) | | Description |
|---|---|---|---|---|
| 1. | Source | | : | **CDU/VDU (Common Stack for Crude and Vacuum Heaters)** |
| 2. | Height | m | : | 100 (From Ground level) |
| 3. | Diameter | m | : | 4.45 |
| 4. | Temperature | °c | : | 156 |
| 5. | Velocity | m/s | : | 12.81 |
| 6. | Type of fuel used | | : | Fuel Oil +Fuel Gas |
| 7. | Quantity of fuel used | Kg/hr | : | 2547.87 (F.Oil) + 6838.8 (F.Gas) |
| 8. | Gas Flow rate | $Nm^3/hr.$ | : | 498387.1 |

| S.No. | Parameters | Unit | | Results | Specification/ SPCB Norms | Method Used |
|---|---|---|---|---|---|---|
| 1. | Particulate Matter | $mg/Nm^3$ | : | 14 | 16 | IS 11255 (Part 1) : 1985 |
| 2. | Sulphur Dioxide($SO_2$) | $mg/Nm^3$ | : | 165.59 | 242 | IS 11255 (Part 2) : 1985 |
| 3. | Oxides of Nitrogen (NOx) | $mg/Nm^3$ | : | 217.43 | 274 | IS 11255 (Part 7) : 2005 |
| 4. | CO | $mg/Nm^3$ | : | 15.58 | 112 | IS 11255 (Part 3): 2008 |
| 5. | Nickel | $mg/Nm^3$ | : | N.D. | 5 | USEPA(2000)-Method 29 |
| 6. | $H_2S$ | $mg/Nm^3$ | : | N.D. | N.A. | IS 11255 (Part-4): 2006 |

Remark:(1) Flow Rate for PM – 21 LPM (2) Flow Rate for Gaseous sampling – 2 LPM (3) Calorific Value in Kcal/kg (i) F.Oil-10264(ii)F.Gas -12077 (4) The Specification is computed based on the heat supplied by Gas & Liquid Fuels. N.D. - Not Detected.

**Authorized By -**

**Name : Bhavisha Pandya** | **Designation : Sr.Chemist**

NOTE:
1) Reports may be reproduced, if required, but only in full and only with written approval of the laboratory.
2) Re analysis of sample will be done, if requested within 7 days from the date of Reporting of sample if the samples are not consumed during analysis.
3) The results reported above relate to the sample identified under Sample Details.

----------END OF REPORT----------

# KADAM ENVIRONMENTAL CONSULTANTS

An ISO 9001-2015 Certified Company (MoEF Approved)

871/B/3, Near Himalaya Machinery, GIDC Makarpura, Vadodara-10.
Phone : (O) 0265 - 6131000, 6131001


## ENVIRONMENTAL MONITORING REPORT

### LABORATORY TEST REPORT - STACK EMMISION

**REPORT NO : AUG23/098/14**

**SAMPLE DETAILS**

| | | | |
|---|---|---|---|
| 1. | Name & Address of Client: Bharat Petroleum Corporation Ltd. Bina Refinery, Village: Agasod, Bina - 470124, Dist: Sagar, Madhya Pradesh, India. | | |
| 2. | Sample ID: 2148088246-098AU23SE01 | 3. | Client Representative: Mr. Anil Medhe |
| 4. | Sample Date: 16.08.2023 | 5. | Sampling Location: CDU/VDU |
| 6. | Sampling Time: 16:10 hr | 7. | Sampling Duration: 46 Mins |
| 8. | Analysis commenced on: 21.08.2023 | 9. | Analysis Completed on: 21.08.2023 |
| 10. | Reporting Date: 28.08.2023 | 11. | Discipline: Chemical |
| 12. | Sample Collected By: Mr. Jitendra Sinha | 13. | Group: Atmospheric Pollution |
| 14. | Sampling Procedure: IS: 11255 Method | 15. | Product: Stack Emission |
| 16. | Description of Sample: Sampling Bottles: Sealed √ | Thimble:Packed√ | Bladder : Clamped √ |
| 17. | Sample Received Date: 21.08.2023 | | |

**STACK DETAILS**

| S.No. | Parameters | Unit (SI) | | Description |
|---|---|---|---|---|
| 1. | Source | | : | **CDU/VDU (Common Stack for Crude and Vacuum Heaters)** |
| 2. | Height | m | : | 100 (From Ground level) |
| 3. | Diameter | m | : | 4.45 |
| 4. | Temperature | °c | : | 156 |
| 5. | Velocity | m/s | : | 12.81 |
| 6. | Type of fuel used | | : | Fuel Oil +Fuel Gas |
| 7. | Quantity of fuel used | Kg/hr | : | 2547.87 (F.Oil) + 6838.8 (F.Gas) |
| 8. | Gas Flow rate | $Nm^3$/hr. | : | 498387.1 |

| S.No. | Parameters | Unit | | Results | Specification/ SPCB Norms | Method Used |
|---|---|---|---|---|---|---|
| 1. | Vanadium | $mg/Nm^3$ | : | N.D. | 5 | APHA 23rd Edition 3500-V B |

Remark:(1) Flow Rate for PM – 21 LPM (2) Flow Rate for Gaseous sampling – 2 LPM (3) Calorific Value in Kcal/kg (i) F.Oil-10264(ii)F.Gas -12077 (4) The Specification is computed based on the heat supplied by Gas & Liquid Fuels. **N.D. - Not Detected.**

**Authorized By -**

**Name : Bhavisha Pandya** | **Designation : Sr.Chemist**

NOTE:
1) Reports may be reproduced, if required, but only in full and only with written approval of the laboratory.
2) Re analysis of sample will be done, if requested within 7 days from the date of Reporting of sample if the samples are not consumed during analysis.
3) The results reported above relate to the sample identified under Sample Details.

----------END OF REPORT----------

## LABORATORY TEST REPORT - STACK EMMISION

**REPORT NO.: AUG23/098/05 (ULR- TC709923000016704F)**

### SAMPLE DETAILS

| | | | |
|---|---|---|---|
| 1. | Name & Address of Client: Bharat Petroleum Corporation Ltd. Bina Refinery, Village: Agasod, Bina - 470124, Dist: Sagar, Madhya Pradesh, India. | | |
| 2. | Sample ID: 2148088246-098AU23SE05 | 3. | Client Representative: Mr. Anil Medhe |
| 4. | Sample Date: 18.08.2023 | 5. | Sampling Location: MS Block (Hot Oil Heater) |
| 6. | Sampling Time: 10:50 hr | 7. | Sampling Duration: 48 Mins |
| 8. | Analysis commenced on: 21.08.2023 | 9. | Analysis Completed on: 21.08.2023 |
| 10. | Reporting Date: 28.08.2023 | 11. | Discipline: Chemical |
| 12. | Sample Collected By: Mr. Jitendra Sinha | 13. | Group: Atmospheric Pollution |
| 14. | Sampling Procedure: IS: 11255 Method | 15. | Product: Stack Emission |
| 16. | Description of Sample: Sampling Bottles: Sealed √ | Thimble:Packed√ | Bladder: Clamped √ |
| 17. | Sample Received Date: 21.08.2023 | | |

### STACK DETAILS

| S.No. | Parameters | Unit (SI) | | Description |
|---|---|---|---|---|
| 1. | Source | | : | **MS Block (Hot Oil Heater)** |
| 2. | Height | m | : | 60 (From Ground Level) |
| 3. | Diameter | m | : | 2.6 |
| 4. | Temperature | °c | : | 196 |
| 5. | Velocity | m/s | : | 12.30 |
| 6. | Type of fuel used | | : | Fuel Oil +Fuel Gas |
| 7. | Quantity of fuel used | Kg/hr | : | 0.0 (F.Oil) + 2418.6 (F.Gas) |
| 8. | Gas Flow rate | $Nm^3$/hr. | : | 149423.4 |

| S.No. | Parameters | Unit | | Results | Specification/ SPCB Norms | Method Used |
|---|---|---|---|---|---|---|
| 1. | Particulate Matter | $mg/Nm^3$ | : | 3 | 5 | IS 11255 (Part 1) : 1985 |
| 2. | Sulphur Dioxide($SO_2$) | $mg/Nm^3$ | : | 43.37 | 50 | IS 11255 (Part 2) : 1985 |
| 3. | Oxides of Nitrogen (NOx) | $mg/Nm^3$ | : | 210.34 | 250 | IS 11255 (Part 7) : 2005 |
| 4. | CO | $mg/Nm^3$ | : | 6.11 | 100 | IS 11255 (Part 3): 2008 |
| 5. | Nickel | $mg/Nm^3$ | : | N.D. | 5 | USEPA(2000)-Method 29 |
| 6. | $H_2S$ | $mg/Nm^3$ | : | N.D. | N.A. | IS 11255 (Part-4): 2006 |

Remark:(1) Flow Rate for PM – 18 LPM (2) Flow Rate for Gaseous sampling – 2 LPM (3) Calorific Value in Kcal/kg (i) F.Oil – 10264(ii)F.Gas - 12077 (4) The Specification is computed based on the heat supplied by Gas & Liquid Fuels. N.D. - Not Detected.

**Authorized By :-**

**Name : Bhavisha Pandya** **Designation : Sr.Chemist**

NOTE:
1) Reports may be reproduced, if required, but only in full and only with written approval of the laboratory.
2) Re analysis of sample will be done, if requested within 7 days from the date of Reporting of sample if the samples are not consumed during analysis.
3) The results reported above relate to the sample identified under Sample Details.

----------END OF REPORT----------

# KADAM ENVIRONMENTAL CONSULTANTS

An ISO 9001-2015 Certified Company (MoEF Approved)

871/B/3, Near Himalaya Machinery, GIDC Makarpura, Vadodara-10.
Phone : (O) 0265 - 6131000, 6131001


## ENVIRONMENTAL MONITORING REPORT

### LABORATORY TEST REPORT - STACK EMMISION

REPORT NO.: AUG23/098/18

**SAMPLE DETAILS**

| | | | |
|---|---|---|---|
| 1. | Name & Address of Client: Bharat Petroleum Corporation Ltd. Bina Refinery, Village: Agasod, Bina - 470124, Dist: Sager, Madhya Pradesh, India. | | |
| 2. | Sample ID: 2148088246–098AU23SE05 | 3. | Client Representative: Mr. Anil Meche |
| 4. | Sample Date: 18.08.2023 | 5. | Sampling Location: MS Block (Hot Oil Heater) |
| 6. | Sampling Time: 10:50 hr | 7. | Sampling Duration: 48 Mins |
| 8. | Analysis commenced on: 21.08.2023 | 9. | Analysis Completed on: 21.08.2023 |
| 10. | Reporting Date: 28.08.2023 | 11. | Discipline: Chemical |
| 12. | Sample Collected By: Mr. Jitendra Sinha | 13. | Group: Atmospheric Pollution |
| 14. | Sampling Procedure: IS: 11255 Method | 15. | Product: Stack Emission |
| 16. | Description of Sample: Sampling Bottles: Sealed √ | Thimble:Packed√ | Bladder: Clamped √ |
| 17. | Sample Received Date: 21.08.2023 | | |

**STACK DETAILS**

| S.No. | Parameters | Unit (SI) | | Description |
|---|---|---|---|---|
| 1. | Source | | : | **MS Block (Hot Oil Heater)** |
| 2. | Height | m | : | 60 (From Ground Level) |
| 3. | Diameter | m | : | 2.6 |
| 4. | Temperature | °C | : | 196 |
| 5. | Velocity | m/s | : | 12.30 |
| 6. | Type of fuel used | | : | Fuel Oil +Fuel Gas |
| 7. | Quantity of fuel used | Kg/hr | : | 0.0 (F.Oil) + 2418.6 (F.Gas) |
| 8. | Gas Flow rate | $Nm^3/hr.$ | : | 149423.4 |

| S.No. | Parameters | Unit | | Results | Specification/ SPCB Norms | Method Used |
|---|---|---|---|---|---|---|
| 1. | Vanadium | $mg/Nm^3$ | : | N.D. | 5 | APHA 23rd Edition 3500-V B |

Remark:(1) Flow Rate for PM – 18 LPM (2) Flow Rate for Gaseous sampling – 2 LPM (3) Calorific Value in Kcal/kg (i) F.Oil – 10264(ii)F.Gas - 12077 (4) The Specification is computed based on the heat supplied by Gas & Liquid Fuels. **N.D. - Not Detected.**

**Authorized By -**

**Name : Bhavisha Pandya** **Designation : Sr.Chemist**

NOTE:
1) Reports may be reproduced, if required, but only in full and only with written approval of the laboratory.
2) Re analysis of sample will be done, if requested within 7 days from the date of Reporting of sample if the samples are not consumed during analysis.
3) The results reported above relate to the sample identified under Sample Details.

----------END OF REPORT----------

KADAM ENVIRONMENTAL CONSULTANTS
An ISO 9001-2015 Certified Company (MoEF Approved)
871/B/3, Near Himalaya Machinery, GIDC Makarpura, Vadodara-10.
Phone : (O) 0265 - 6131000, 6131001

TC-7000

## ENVIRONMENTAL MONITORING REPORT

### LABORATORY TEST REPORT - STACK EMMISION

REPORT NO.: AUG23/098/06 (ULR- TC709923000016705F)

### SAMPLE DETAILS

| | | | |
|---|---|---|---|
| 1. | Name & Address of Client: Bharat Petroleum Corporation Ltd. Bina Refinery, Village: Agasod, Bina - 470124, Dist: Sagar, Madhya Pradesh, India. | | |
| 2. | Sample ID: 2148088246-098AU23SE06 | 3. | Client Representative: Mr. Anil Medhe |
| 4. | Sample Date: 18.08.2023 | 5. | Sampling Location: MS Block (NHT-CCR Common Stack) |
| 6. | Sampling Time: 13:20 hr | 7. | Sampling Duration: 44 Mins |
| 8. | Analysis commenced on: 21.08.2023 | 9. | Analysis Completed on: 21.08.2023 |
| 10. | Reporting Date: 28.08.2023 | 11. | Discipline: Chemical |
| 12. | Sample Collected By: Mr. Jitendra Sinha | 13. | Group: Atmospheric Pollution |
| 14. | Sampling Procedure: IS: 11255 Method | 15. | Product: Stack Emission |
| 16. | Description of Sample: Sampling Bottles: Sealed √ | Thimble:Packed√ | Bladder: Clamped √ |
| 17. | Sample Received Date: 21.08.2023 | | |

### STACK DETAILS

| S.No. | Parameters | Unit (SI) | | Description |
|---|---|---|---|---|
| 1. | Source | | : | **MS Block (NHT-CCR Common Stack)** |
| 2. | Height | m | : | 60 (from Ground Level) |
| 3. | Diameter | m | : | 3.2 |
| 4. | Temperature | °c | : | 226 |
| 5. | Velocity | m/s | : | 13.38 |
| 6. | Type of fuel used | | : | Fuel Oil +Fuel Gas |
| 7. | Quantity of fuel used | Kg/hr | : | 0.0 (F.Oil) + 5016.51 (F.Gas) |
| 8. | Gas Flow rate | $Nm^3$/hr. | : | 231440.2 |

| S.No. | Parameters | Unit | | Results | Specification/ SPCB Norms | Method Used |
|---|---|---|---|---|---|---|
| 1. | Particulate Matter | $mg/Nm^3$ | : | 4 | 5 | IS 11255 (Part 1) : 1985 |
| 2. | Sulphur Dioxide($SO_2$) | $mg/Nm^3$ | : | 41.59 | 50 | IS 11255 (Part 2) : 1985 |
| 3. | Oxides of Nitrogen (NOx) | $mg/Nm^3$ | : | 190.14 | 250 | IS 11255 (Part 7) : 2005 |
| 4. | CO | $mg/Nm^3$ | : | 7.36 | 100 | IS 11255 (Part 3): 2008 |
| 5. | Nickel | $mg/Nm^3$ | : | N.D. | 5 | USEPA(2000)-Method 29 |
| 6. | $H_2S$ | $mg/Nm^3$ | : | N.D. | N.A. | IS 11255 (Part-4): 2006 |

Remark:(1) Flow Rate for PM - 21 LPM (2) Flow Rate for Gaseous sampling – 2 LPM (3) Calorific Value in Kcal/kg (i) F.Oil – 10264(ii)F.Gas - 12077 (4) The Specification is computed based on the heat supplied by Gas & Liquid Fuels. N.D. - Not Detected.

**Authorized By -**

**Name : Bhavisha Pandya** **Designation : Sr.Chemist**

NOTE:
1) Reports may be reproduced, if required, but only in full and only with written approval of the laboratory.
2) Re analysis of sample will be done, if requested within 7 days from the date of Reporting of sample if the samples are not consumed during analysis.
3) The results reported above relate to the sample identified under Sample Details.

----------END OF REPORT----------

# KADAM ENVIRONMENTAL CONSULTANTS

An ISO 9001-2015 Certified Company (MoEF Approved)

871/B/3, Near Himalaya Machinery, GIDC Makarpura, Vadodara-10.
Phone : (O) 0265 - 6131000, 6131001


## ENVIRONMENTAL MONITORING REPORT

### LABORATORY TEST REPORT - STACK EMMISION

REPORT NO.: AUG23/098/19

### SAMPLE DETAILS

| | | | |
|---|---|---|---|
| 1. | Name & Address of Client: Bharat Petroleum Corporation Ltd. Bina Refinery, Village: Agasod, Bina - 470124, Dist: Sagar, Madhya Pradesh, India. | | |
| 2. | Sample ID: 2148088245–098AU23SE06 | 3. | Client Representative: Mr. Anil Medhe |
| 4. | Sample Date: 18.08.2023 | 5. | Sampling Location: MS Block (NHT-CCR Common Stack) |
| 6. | Sampling Time: 13:20 hr | 7. | Sampling Duration: 44 Mins |
| 8. | Analysis commenced on: 21.08.2023 | 9. | Analysis Completed on: 21.08.2023 |
| 10. | Reporting Date: 28.08.2023 | 11. | Discipline: Chemical |
| 12. | Sample Collected By: Mr. Jitendra Sinha | 13. | Group: Atmospheric Pollution |
| 14. | Sampling Procedure: IS: 11255 Method | 15. | Product: Stack Emission |
| 16. | Description of Sample: Sampling Bottles: Sealed √ | Thimble:Packed√ | Bladder: Clamped √ |
| 17. | Sample Received Date: 21.08.2023 | | |

### STACK DETAILS

| S.No. | Parameters | Unit (SI) | | Description |
|---|---|---|---|---|
| 1. | Source | | : | **MS Block (NHT-CCR Common Stack)** |
| 2. | Height | m | : | 60 (from Ground Level) |
| 3. | Diameter | m | : | 3.2 |
| 4. | Temperature | °c | : | 226 |
| 5. | Velocity | m/s | : | 13.38 |
| 6. | Type of fuel used | | : | Fuel Oil +Fuel Gas |
| 7. | Quantity of fuel used | Kg/hr | : | 0.0 (F.Oil) + 5016.51 (F.Gas) |
| 8. | Gas Flow rate | $Nm^3/hr.$ | : | 231440.2 |

| S.No. | Parameters | Unit | | Results | Specification/ SPCB Norms | Method Used |
|---|---|---|---|---|---|---|
| 1. | Vanadium | $mg/Nm^3$ | : | N.D. | 5 | APHA 23rd Edition 3500-V B |

Remark:(1) Flow Rate for PM – 21 LPM (2) Flow Rate for Gaseous sampling – 2 LPM (3) Calorific Value in Kcal/kg (i) F.Oil – 10264(ii)F.Gas - 12077 (4) The Specification is computed based on the heat supplied by Gas & Liquid Fuels. **N.D. - Not Detected.**

**Authorized By :-**

**Name : Bhavisha Pandya** **Designation : Sr.Chemist**

NOTE:
1) Reports may be reproduced, if required, but only in full and only with written approval of the laboratory.
2) Re analysis of sample will be done, if requested within 7 days from the date of Reporting of sample if the samples are not consumed during analysis.
3) The results reported above relate to the sample identified under Sample Details.

----------END OF REPORT----------

## LABORATORY TEST REPORT - STACK EMMISION

REPORT NO.: AUG23/098/07 (ULR- TC709923000016706F)

### SAMPLE DETAILS

| | | | |
|---|---|---|---|
| 1. | Name & Address of Client: Bharat Petroleum Corporation Ltd. Bina Refinery, Village: Agasod, Bina - 470124, Dist: Sagar, Madhya Pradesh, India. | | |
| 2. | Sample ID: 2148088246-098AU23SE07 | 3. | Client Representative: Mr. Anil Medhe |
| 4. | Sample Date: 18.08.2023 | 5. | Sampling Location: MS Block (CCR Auxiliary) 1 & 2 Inter Heater |
| 6. | Sampling Time: 12:00 hr | 7. | Sampling Duration: 50 Mins |
| 8. | Analysis commenced on: 21.08.2023 | 9. | Analysis Completed on: 21.08.2023 |
| 10. | Reporting Date: 28.08.2023 | 11. | Discipline: Chemical |
| 12. | Sample Collected By: Mr. Jitendra Sinha | 13. | Group: Atmospheric Pollution |
| 14. | Sampling Procedure: IS: 11255 Method | 15. | Product: Stack Emission |
| 16. | Description of Sample: | Sampling Bottles: Sealed √ | Thimble:Packed√ / Bladder: Clamped √ |
| 17. | Sample Received Date: 21.08.2023 | | |

### STACK DETAILS

| S.No. | Parameters | Unit (SI) | | Description |
|---|---|---|---|---|
| 1. | Source | | : | **MS Block (CCR Auxiliary) 1 & 2 Inter Heater** |
| 2. | Height | m | : | 65 |
| 3. | Diameter | m | : | 1.65 |
| 4. | Temperature | °c | : | 160 |
| 5. | Velocity | m/s | : | 11.60 |
| 6. | Type of fuel used | | : | Fuel Oil + Fuel Gas |
| 7. | Quantity of fuel used | Kg/hr | : | 0.0 (F.Oil) + 279.39 (F.Gas) |
| 8. | Gas Flow rate | $Nm^3/hr.$ | : | 61469.5 |

| S.No. | Parameters | Unit | | Results | Specification/ SPCB Norms | Method Used |
|---|---|---|---|---|---|---|
| 1. | Particulate Matter | $mg/Nm^3$ | : | 4 | 5 | IS 11255 (Part 1) : 1985 |
| 2. | Sulphur Dioxide($SO_2$) | $mg/Nm^3$ | : | 43.46 | 50 | IS 11255 (Part 2) : 1985 |
| 3. | Oxides of Nitrogen (NOx) | $mg/Nm^3$ | : | 206.63 | 250 | IS 11255 (Part 7) : 2005 |
| 4. | CO | $mg/Nm^3$ | : | 4.67 | 100 | IS 11255 (Part 3): 2008 |
| 5. | Nickel | $mg/Nm^3$ | : | N.D. | N.A. | USEPA(2000)-Method 29 |
| 6. | $H_2S$ | $mg/Nm^3$ | : | N.D. | N.A. | IS 11255 (Part-4): 2006 |

Remark:(1) Flow Rate for PM – 21 LPM (2) Flow Rate for Gaseous sampling – 2 LPM (3) Calorific Value in Kcal/kg (i) F.Oil – 10264(ii)F.Gas - 12077 (4) The Specification is computed based on the heat supplied by Gas & Liquid Fuels. N.D. - Not Detected.

**Authorized By :**

**Name : Bhavisha Pandya** | **Designation : Sr.Chemist**

NOTE:
1) Reports may be reproduced, if required, but only in full and only with written approval of the laboratory.
2) Re analysis of sample will be done, if requested within 7 days from the date of Reporting of sample if the samples are not consumed during analysis.
3) The results reported above relate to the sample identified under Sample Details.

----------END OF REPORT----------

# KADAM ENVIRONMENTAL CONSULTANTS

An ISO 9001-2015 Certified Company (MoEF Approved)

871/B/3, Near Himalaya Machinery, GIDC Makarpura, Vadodara-10.
Phone : (O) 0265 - 6131000, 6131001


## ENVIRONMENTAL MONITORING REPORT

### LABORATORY TEST REPORT - STACK EMMISION

**REPORT NO.: AUG23/098/20**

**SAMPLE DETAILS**

| | | | |
|---|---|---|---|
| 1. | Name & Address of Client: Bharat Petroleum Corporation Ltd. Bina Refinery, Village: Agasod, Bina - 470124, Dist: Sagar, Madhya Pradesh, India. | | |
| 2. | Sample ID: 2148088246–098AU23SE07 | 3. | Client Representative: Mr. Anil Medhe |
| 4. | Sample Date: 18.08.2023 | 5. | Sampling Location: MS Block (CCR Auxiliary) 1 & 2 Inter Heater |
| 6. | Sampling Time: 12:00 hr | 7. | Sampling Duration: 50 Mins |
| 8. | Analysis commenced on: 21.08.2023 | 9. | Analysis Completed on: 21.08.2023 |
| 10. | Reporting Date: 28.08.2023 | 11. | Discipline: Chemical |
| 12. | Sample Collected By: Mr. Jitendra Sinha | 13. | Group: Atmospheric Pollution |
| 14. | Sampling Procedure: IS: 11255 Method | 15. | Product: Stack Emission |
| 16. | Description of Sample: Sampling Bottles: Sealed √ | Thimble: Packed √ | Bladder: Clamped √ |
| 17. | Sample Received Date: 21.08.2023 | | |

**STACK DETAILS**

| S.No. | Parameters | Unit (SI) | | Description |
|---|---|---|---|---|
| 1. | Source | | : | **MS Block (CCR Auxilary) 1 & 2 Inter Heater** |
| 2. | Height | m | : | 65 |
| 3. | Diameter | m | : | 1.65 |
| 4. | Temperature | °c | : | 160 |
| 5. | Velocity | m/s | : | 11.60 |
| 6. | Type of fuel used | | : | Fuel Oil + Fuel Gas |
| 7. | Quantity of fuel used | Kg/hr | : | 0.0 (F.Oil) + 279.39 (F.Gas) |
| 8. | Gas Flow rate | $Nm^3/hr.$ | : | 61469.5 |

| S.No. | Parameters | Unit | | Results | Specification/ SPCB Norms | Method Used |
|---|---|---|---|---|---|---|
| 1. | Vanadium | $mg/Nm^3$ | : | N.D. | 5 | APHA 23rd Edition 3500-V B |

Remark:(1) Flow Rate for PM – 21 LPM (2) Flow Rate for Gaseous sampling – 2 LPM (3) Calorific Value in Kcal/kg (i) F.Oil – 10264(i)F.Gas - 12077 (4) The Specification is computed based on the heat supplied by Gas & Liquid Fuels. **N.D. - Not Detected.**

**Authorized By :**

**Name : Bhavisha Pandya** | **Designation : Sr.Chemist**

NOTE:
1) Reports may be reproduced, if required, but only in full and only with written approval of the laboratory.
2) Re analysis of sample will be done, if requested within 7 days from the date of Reporting of sample if the samples are not consumed during analysis.
3) The results reported above relate to the sample identified under Sample Details.

----------END OF REPORT----------

## LABORATORY TEST REPORT - STACK EMMISION

REPORT NO.: AUG23/098/59 (ULR- TC709923000016982F)

### SAMPLE DETAILS

| | | | |
|---|---|---|---|
| 1. | Name & Address of Client: Bharat Petroleum Corporation Ltd, Bina Refinery, Village: Agasod, Bina - 470124, Dist: Sagar, Madhya Pradesh, India. | | |
| 2. | Sample ID: 2148088246-098AU23SE14 | 3. | Client Representative: Mr. Anil Medhe |
| 4. | Sample Date: 14.08.2023 | 5. | Sampling Location: MS Block (NHT Auxiliary) Heater |
| 6. | Sampling Time: - | 7. | Sampling Duration: - |
| 8. | Analysis commenced on: - | 9. | Analysis Completed on: - |
| 10. | Reporting Date: 28.08.2023 | 11. | Discipline: Chemical |
| 12. | Sample Collected By: Mr. Jitendra Sinha | 13. | Group: Atmospheric Pollution |
| 14. | Sampling Procedure: IS: 11255 Method | 15. | Product: Stack Emission |
| 16. | Description of Sample: Sampling Bottles: Sealed √ | Thimble:Packed√ | Bladder: Clamped √ |
| 17. | Sample Received Date: - | | |

### STACK DETAILS

| S.No. | Parameters | Unit (SI) | | Description |
|---|---|---|---|---|
| 1. | Source | | : | **MS Block (NHT Auxiliary) Heater** |
| 2. | Height | m | : | 60 |
| 3. | Diameter | m | : | 1.59 |
| 4. | Temperature | °c | : | - |
| 5. | Velocity | m/s | : | - |
| 6. | Type of fuel used | | : | - |
| 7. | Quantity of fuel used | Kg/hr | : | - |
| 8. | Gas Flow rate | $Nm^3/hr.$ | : | - |

| S.No. | Parameters | Unit | | Results | Specification / SPCB Norms | Method Used |
|---|---|---|---|---|---|---|
| 1. | Particulate Matter | $mg/Nm^3$ | : | - | 5 | IS 11255 (Part 1) : 1985 |
| 2. | Sulphur Dioxide($SO_2$) | $mg/Nm^3$ | : | - | 50 | IS 11255 (Part 2) : 1985 |
| 3. | Oxides of Nitrogen (NOx) | $mg/Nm^3$ | : | - | 250 | IS 11255 (Part 7) : 2005 |
| 4. | CO | $mg/Nm^3$ | : | - | 100 | IS 11255 (Part 3): 2008 |
| 5. | Nickel | $mg/Nm^3$ | : | - | N.A. | USEPA(2000) Method 29 |
| 6. | $H_2S$ | $mg/Nm^3$ | : | - | N.A. | IS 11255 (Part-4): 2006 |

**Remark: Stack was under shutdown during the sampling period.**

**Authorized By -**

**Name : Bhavisha Pandya** **Designation : Sr.Chemist**

NOTE:
1) Reports may be reproduced, if required, but only in full and only with written approval of the laboratory.
2) Re analysis of sample will be done, if requested within 7 days from the date of Reporting of sample if the samples are not consumed during analysis.
3) The results reported above relate to the sample identified under Sample Details.

----------END OF REPORT----------

# KADAM ENVIRONMENTAL CONSULTANTS

An ISO 9001-2015 Certified Company (MoEF Approved)

871/B/3, Near Himalaya Machinery, GIDC Makarpura, Vadodara-10.
Phone : (O) 0265 - 6131000, 6131001


## ENVIRONMENTAL MONITORING REPORT

### LABORATORY TEST REPORT - STACK EMMISION

**REPORT NO.: AUG23/098/60**

**SAMPLE DETAILS**

| | | | |
|---|---|---|---|
| 1. | Name & Address of Client: Bharat Petroleum Corporation Ltd. Bina Refinery, Village: Agasod, Bina - 470124, Dist: Sagar, Madhya Pradesh, India. | | |
| 2. | Sample ID: 2148088246-098AU23SE13 | 3. | Client Representative: Mr. Anil Medhe |
| 4. | Sample Date: 14.08.2023 | 5. | Sampling Location: MS Block (NHT Auxiliary) Heater |
| 6. | Sampling Time: - | 7. | Sampling Duration: - |
| 8. | Analysis commenced on: - | 9. | Analysis Completed on: - |
| 10. | Reporting Date: 28.08.2023 | 11. | Discipline: Chemical |
| 12. | Sample Collected By: Mr. Jitendra Sinha | 13. | Group: Atmospheric Pollution |
| 14. | Sampling Procedure: IS: 11255 Method | 15. | Product: Stack Emission |
| 16. | Description of Sample: | Sampling Bottles: Sealed √ | Thimble:Packed√ / Bladder: Clamped √ |
| 17. | Sample Received Date: - | | |

**STACK DETAILS**

| S.No. | Parameters | Unit (SI) | | Description |
|---|---|---|---|---|
| 1. | Source | | : | **MS Block (NHT Auxiliary) Heater** |
| 2. | Height | m | : | 60 |
| 3. | Diameter | m | : | 1.59 |
| 4. | Temperature | °c | : | - |
| 5. | Velocity | m/s | : | - |
| 6. | Type of fuel used | | : | - |
| 7. | Quantity of fuel used | Kg/hr | : | - |
| 8. | Gas Flow rate | $Nm^3/hr.$ | : | - |

| S.No. | Parameters | Unit | | Results | Specification/ SPCB Norms | Method Used |
|---|---|---|---|---|---|---|
| 1. | Vanadium | $mg/Nm^3$ | : | - | 5 | APHA 23rd Edition 3500-V B |

**Remark: Stack was under shutdown during the sampling period.**

**Authorized By -**

**Name : Bhavisha Pandya** | **Designation : Sr.Chemist**

NOTE:
1) Reports may be reproduced, if required, but only in full and only with written approval of the laboratory.
2) Re analysis of sample will be done, if requested within 7 days from the date of Reporting of sample if the samples are not consumed during analysis.
3) The results reported above relate to the sample identified under Sample Details.

----------END OF REPORT----------

## LABORATORY TEST REPORT - STACK EMMISION

REPORT NO.: AUG23/098/04 (ULR- TC709923000016703F)

### SAMPLE DETAILS

| | | | |
|---|---|---|---|
| 1. | Name & Address of Client: Bharat Petroleum Corporation Ltd. Bina Refinery, Village: Agasod, Bina - 470124, Dist: Sagar, Madhya Pradesh, India. | | |
| 2. | Sample ID: 2148088246-098AU23SE04 | 3. | Client Representative: Mr. Anil Medhe |
| 4. | Sample Date: 16.08.2023 | 5. | Sampling Location: HCU |
| 6. | Sampling Time: 12:10 hr | 7. | Sampling Duration: 44 Mins |
| 8. | Analysis commenced on: 21.08.2023 | 9. | Analysis Completed on: 21.08.2023 |
| 10. | Reporting Date: 28.08.2023 | 11. | Discipline: Chemical |
| 12. | Sample Collected By: Mr. Jitendra Sinha | 13. | Group: Atmospheric Pollution |
| 14. | Sampling Procedure: IS: 11255 Method | 15. | Product: Stack Emission |
| 16. | Description of Sample: | Sampling Bottles: Sealed √ | Thimble:Packed √ / Bladder: Clamped √ |
| 17. | Sample Received Date: 21.08.2023 | | |

### STACK DETAILS

| S.No. | Parameters | Unit (SI) | | Description |
|---|---|---|---|---|
| 1. | Source | | : | **HCU (Common Stack)** |
| 2. | Height | m | : | 100 (From Ground Level) |
| 3. | Diameter | m | : | 2.34 |
| 4. | Temperature | °c | : | 256 |
| 5. | Velocity | m/s | : | 13.23 |
| 6. | Type of fuel used | | : | Fuel oil +Fuel Gas |
| 7. | Quantity of fuel used | Kg/hr | : | 20.85 (F.Oil) + 5717.07 (F.Gas) |
| 8. | Gas Flow rate | $Nm^3/hr.$ | : | 115411.9 |

| S.No. | Parameters | Unit | | Results | Specification/ SPCB Norms | Method Used |
|---|---|---|---|---|---|---|
| 1. | Particulate Matter | $mg/Nm^3$ | : | 4 | 5 | IS 11255 (Part 1) : 1985 |
| 2. | Sulphur Dioxide($SO_2$) | $mg/Nm^3$ | : | 46.41 | 52 | IS 11255 (Part 2) : 1985 |
| 3. | Oxides of Nitrogen (NOx) | $mg/Nm^3$ | : | 208.36 | 250 | IS 11255 (Part 7) : 2005 |
| 4. | CO | $mg/Nm^3$ | : | 16.19 | 100 | IS 11255 (Part 3): 2008 |
| 5. | Nickel | $mg/Nm^3$ | : | N.D. | 5 | USEPA(2000)-Method 29 |
| 6. | $H_2S$ | $mg/Nm^3$ | : | N.D. | N.A. | IS 11255 (Part-4): 2006 |

Remark:(1) Flow Rate for PM – 20 LPM (2) Flow Rate for Gaseous sampling – 2 LPM (3) Calorific Value in Kcal/kg (i) F.Oil – 10264(ii)F.Gas - 12077 (4) The Specification is completed based on the heat supplied by Gas & Liquid Fuels. N.D. - Not Detected.

**Authorized By -**

**Name : Bhavisha Pandya** | **Designation : Sr.Chemist**

NOTE:
1) Reports may be reproduced, if required, but only in full and only with written approval of the laboratory.
2) Re analysis of sample will be done, if requested within 7 days from the date of Reporting of sample if the samples are not consumed during analysis.
3) The results reported above relate to the sample identified under Sample Details.

----------END OF REPORT----------

# KADAM ENVIRONMENTAL CONSULTANTS

An ISO 9001-2015 Certified Company (MoEF Approved)

871/B/3, Near Himalaya Machinery, GIDC Makarpura, Vadodara-10.
Phone : (O) 0265 - 6131000, 6131001


## ENVIRONMENTAL MONITORING REPORT

### LABORATORY TEST REPORT - STACK EMMISION

**REPORT NO.: AUG23/098/17**

**SAMPLE DETAILS**

| | | | |
|---|---|---|---|
| 1. | Name & Address of Client: Bharat Petroleum Corporation Ltd. Bina Refinery, Village: Agasod, Bina - 470124, Dist: Sagar, Madhya Pradesh, India. | | |
| 2. | Sample ID: 2148088246-098AU23SE04 | 3. | Client Representative: Mr. Anil Medhe |
| 4. | Sample Date: 16.08.2023 | 5. | Sampling Location: HCU |
| 6. | Sampling Time: 12:10 hr | 7. | Sampling Duration: 44 Mins |
| 8. | Analysis commenced on: 21.08.2023 | 9. | Analysis Completed on: 21.08.2023 |
| 10. | Reporting Date: 28.08.2023 | 11. | Discipline: Chemical |
| 12. | Sample Collected By: Mr. Jitendra Sinha | 13. | Group: Atmospheric Pollution |
| 14. | Sampling Procedure: IS: 11255 Method | 15. | Product: Stack Emission |
| 16. | Description of Sample: Sampling Bottles: Sealed √ | Thimble:Packed√ | Bladder: Clamped √ |
| 17. | Sample Received Date: 21.08.2023 | | |

**STACK DETAILS**

| S.No. | Parameters | Unit (SI) | | Description |
|---|---|---|---|---|
| 1. | Source | | : | **HCU (Common Stack)** |
| 2. | Height | m | : | 100 (From Ground Level) |
| 3. | Diameter | m | : | 2.34 |
| 4. | Temperature | °c | : | 256 |
| 5. | Velocity | m/s | : | 13.23 |
| 6. | Type of fuel used | | : | Fuel oil +Fuel Gas |
| 7. | Quantity of fuel used | Kg/hr | : | 20.85 (F.Oil) + 5717.07 (F.Gas) |
| 8. | Gas Flow rate | $Nm^3/hr.$ | : | 115411.9 |

| S.No. | Parameters | Unit | | Results | Specification/ SPCB Norms | Method Used |
|---|---|---|---|---|---|---|
| 1. | Vanadium | $mg/Nm^3$ | : | N.D. | 5 | APHA 23rd Edition 3500-V B |

Remark:(1) Flow Rate for PM – 20 LPM (2) Flow Rate for Gaseous sampling – 2 LPM (3) Calorific Value in Kcal/kg (i) F.Oil – 10264(ii)F.Gas - 12077 (4) The Specification is computed based on the heat supplied by Gas & Liquid Fuels. **N.D. - Not Detected.**

**Authorized By :**

**Name : Bhavisha Pandya** | **Designation : Sr.Chemist**

NOTE:
1) Reports may be reproduced, if required, but only in full and only with written approval of the laboratory.
2) Re analysis of sample will be done, if requested within 7 days from the date of Reporting of sample if the samples are not consumed during analysis.
3) The results reported above relate to the sample identified under Sample Details.

----------END OF REPORT----------

## LABORATORY TEST REPORT - STACK EMMISION

REPORT NO.: AUG23/098/03 (ULR- TC709923000016702F)

### SAMPLE DETAILS

| | | | |
|---|---|---|---|
| 1. | Name & Address of Client: Bharat Petroleum Corporation Ltd. Bina Refinery, Village: Agasod, Bina - 470124, Dist: Sagar, Madhya Pradesh, India. | | |
| 2. | Sample ID: 2148088246-098AU23SE03 | 3. | Client Representative: Mr. Anil Medhe |
| 4. | Sample Date: 16.08.2023 | 5. | Sampling Location: HGU |
| 6. | Sampling Time: 11:00 hr | 7. | Sampling Duration: 46 mins |
| 8. | Analysis commenced on: 21.08.2023 | 9. | Analysis Completed on: 21.08.2023 |
| 10. | Reporting Date: 28.08.2023 | 11. | Discipline: Chemical |
| 12. | Sample Collected By: Mr. Jitendra Sinha | 13. | Group: Atmospheric Pollution |
| 14. | Sampling Procedure: IS: 11255 Method | 15. | Product: Stack Emission |
| 16. | Description of Sample: Sampling Bottles: Sealed √ | Thimble:Packed√ | Bladder: Clamped √ |
| 17. | Sample Received Date: 21.08.2023 | | |

### STACK DETAILS

| S.No. | Parameters | Unit (SI) | | Description |
|---|---|---|---|---|
| 1. | Source | | : | HGU |
| 2. | Height | m | : | 70 (From Ground Level) |
| 3. | Diameter | m | : | 3.1 |
| 4. | Temperature | °c | : | 288 |
| 5. | Velocity | m/s | : | 12.95 |
| 6. | Type of fuel used | | : | Naptha + Purge Gas |
| 7. | Quantity of fuel used | Kg/hr | : | 8010.57 (N) + 19966 (P.Gas) |
| 8. | Gas Flow rate | $Nm^3/hr.$ | : | 186950.8 |

| S.No. | Parameters | Unit | | Results | Specification/ SPCB Norms | Method Used |
|---|---|---|---|---|---|---|
| 1. | Particulate Matter | $mg/Nm^3$ | : | 36 | 42 | IS 11255 (Part 1) : 1985 |
| 2. | Sulphur Dioxide($SO_2$) | $mg/Nm^3$ | : | 506.08 | 709 | IS 11255 (Part 2) : 1985 |
| 3. | Oxides of Nitrogen (NOx) | $mg/Nm^3$ | : | 221.46 | 332 | IS 11255 (Part 7) : 2005 |
| 4. | CO | $mg/Nm^3$ | : | 5.93 | 141 | IS 11255 (Part 3): 2008 |
| 5. | Nickel | $mg/Nm^3$ | : | N.D. | 5 | USEPA(2000)-Method 29 |
| 6. | $H_2S$ | $mg/Nm^3$ | : | N.D. | N.A. | IS 11255 (Part-4): 2006 |

Remark:(1) Flow Rate for PM – 25 LPM (2) Flow Rate for Gaseous sampling – 2 LPM (3) Calorific Value in Kcal/kg (i) Naptha –10647 (ii)P.Gas -1290 (4) The Specification is computed based on the heat supplied by Gas & Liquid Fuels. N.D. - Not Detected.

**Authorized By**

**Name : Bhavisha Pandya** | **Designation : Sr.Chemist**

NOTE:
1) Reports may be reproduced, if required, but only in full and only with written approval of the laboratory.
2) Re analysis of sample will be done, if requested within 7 days from the date of Reporting of sample if the samples are not consumed during analysis.
3) The results reported above relate to the sample identified under Sample Details.

----------END OF REPORT----------

# KADAM ENVIRONMENTAL CONSULTANTS

An ISO 9001-2015 Certified Company (MoEF Approved)

871/B/3, Near Himalaya Machinery, GIDC Makarpura, Vadodara-10.
Phone : (O) 0265 - 6131000, 6131001


## ENVIRONMENTAL MONITORING REPORT

### LABORATORY TEST REPORT - STACK EMMISION

REPORT NO : AUG23/098/16

### SAMPLE DETAILS

| | | | |
|---|---|---|---|
| 1. | Name & Address of Client: Bharat Petroleum Corporation Ltd. Bina Refinery, Village: Agasod, Bina - 470124, Dist: Sagar, Madhya Pradesh, India. | | |
| 2. | Sample ID: 2148088246–098AU23SE03 | 3. | Client Representative: Mr. Anil Medhe |
| 4. | Sample Date: 16.08.2023 | 5. | Sampling Location: HGU |
| 6. | Sampling Time: 11:00 hr | 7. | Sampling Duration: 46 mins |
| 8. | Analysis commenced on: 21.08.2023 | 9. | Analysis Completed on: 21.08.2023 |
| 10. | Reporting Date: 28.08.2023 | 11. | Discipline: Chemical |
| 12. | Sample Collected By: Mr. Jitendra Sinha | 13. | Group: Atmospheric Pollution |
| 14. | Sampling Procedure: IS: 11255 Method | 15. | Product: Stack Emission |
| 16. | Description of Sample: Sampling Bottles: Sealed √ | Thimble:Packed√ | Bladder: Clamped √ |
| 17. | Sample Received Date: 21.08.2023 | | |

### STACK DETAILS

| S.No. | Parameters | Unit (SI) | | Description |
|---|---|---|---|---|
| 1. | Source | | : | HGU |
| 2. | Height | m | : | 70 (From Ground Level) |
| 3. | Diameter | m | : | 3.1 |
| 4. | Temperature | °c | : | 288 |
| 5. | Velocity | m/s | : | 12.95 |
| 6. | Type of fuel used | | : | Naptha + Purge Gas + Fuel Gas |
| 7. | Quantity of fuel used | Kg/hr | : | 8010.57 (N) + 19966 (P.Gas) |
| 8. | Gas Flow rate | $Nm^3/hr.$ | : | 186950.8 |

| S.No. | Parameters | Unit | | Results | Specification/ SPCB Norms | Method Used |
|---|---|---|---|---|---|---|
| 1. | Vanadium | $mg/Nm^3$ | : | N.D. | 5 | APHA 23rd Edition 3500-V B |

Remark:(1) Flow Rate for PM - 25 LPM (2) Flow Rate for Gaseous sampling – 2 LPM (3) Calorific Value in Kcal/kg (i) Naptha –10647 (ii)P.Gas -1290 (4) The Specification incorporated based on the heat supplied by Gas & Liquid Fuels. **N.D. - Not Detected.**

**Authorized By -**

**Name : Bhavisha Pandya** | **Designation : Sr.Chemist**

NOTE:
1) Reports may be reproduced, if required, but only in full and only with written approval of the laboratory.
2) Re analysis of sample will be done, if requested within 7 days from the date of Reporting of sample if the samples are not consumed during analysis.
3) The results reported above relate to the sample identified under Sample Details.

----------END OF REPORT----------

## LABORATORY TEST REPORT - STACK EMMISION

**REPORT NO.: AUG23/098/02 (ULR- TC709923000016701F)**

### SAMPLE DETAILS

| | | | |
|---|---|---|---|
| 1. | Name & Address of Client: Bharat Petroleum Corporation Ltd.<br>Bina Refinery, Village: Agasod, Bina - 470124, Dist: Sager, Madhya Pradesh, India. | | |
| 2. | Sample ID: 2148088246–098AU23SE02 | 3. | Client Representative: Mr. Anil Medhe |
| 4. | Sample Date: 16.08.2023 | 5. | Sampling Location: DCU |
| 6. | Sampling Time: 15:00 hr | 7. | Sampling Duration: 48 Mins |
| 8. | Analysis commenced on: 21.08.2023 | 9. | Analysis Completed on: 21.08.2023 |
| 10. | Reporting Date: 28.08.2023 | 11. | Discipline: Chemical |
| 12. | Sample Collected By: Mr. Jitendra Sinha | 13. | Group: Atmospheric Pollution |
| 14. | Sampling Procedure: IS: 11255 Method | 15. | Product: Stack Emission |
| 16. | Description of Sample: Sampling Bottles: Sealed √ | Thimble:Packed√ | Bladder: Clamped √ |
| 17. | Sample Received Date: 21.08.2023 | | |

### STACK DETAILS

| S.No. | Parameters | Unit (SI) | | Description |
|---|---|---|---|---|
| 1. | Source | | : | **DCU (Common Stack for Coker Feed Heaters A&B)** |
| 2. | Height | M | : | 60 (From Ground level) |
| 3. | Diameter | m | : | 2.18 |
| 4. | Temperature | $^{0}c$ | : | 173 |
| 5. | Velocity | m/s | : | 12.29 |
| 6. | Type of fuel used | | : | Fuel Oil + Fuel Gas |
| 7. | Quantity of fuel used | Kg/hr | : | 0.0 (F.Oil) + 2226.78 (F.Gas) |
| 8. | Gas Flow rate | $Nm^3/hr.$ | : | 110380.1 |

| S.No. | Parameters | Unit | | Results | Specification/ SPCB Norms | Method Used |
|---|---|---|---|---|---|---|
| 1. | Particulate Matter | $mg/Nm^3$ | : | 3 | 5 | IS 11255 (Part 1) : 1985 |
| 2. | Sulphur Dioxide($SO_2$) | $mg/Nm^3$ | : | 41.25 | 50 | IS 11255 (Part 2) : 1985 |
| 3. | Oxides of Nitrogen (NOx) | $mg/Nm^3$ | : | 220.65 | 250 | IS 11255 (Part 7) : 2005 |
| 4. | CO | $mg/Nm^3$ | : | 7.82 | 100 | IS 11255 (Part 3): 2008 |
| 5. | Nickel | $mg/Nm^3$ | : | N.D. | 5 | USEPA(2000)-Method 29 |
| 6. | $H_2S$ | $mg/Nm^3$ | : | N.D. | N.A. | IS 11255 (Part-4): 2006 |

Remark:(1) Flow Rate for PM – 20 LPM (2) Flow Rate for Gaseous sampling – 2 LPM (3) Calorific Value in Kcal/kg (i) F.Oil – 10264(ii)F.Gas - 12077 (4) The Specification is computed based on the heat supplied by Gas & Liquid Fuels. N.D. - Not Detected.

**Authorized By :**

**Name : Bhavisha Pandya** | **Designation : Sr.Chemist**

NOTE:
1) Reports may be reproduced, if required, but only in full and only with written approval of the laboratory.
2) Re analysis of sample will be done, if requested within 7 days from the date of Reporting of sample if the samples are not consumed during analysis.
3) The results reported above relate to the sample identified under Sample Details.

----------END OF REPORT----------

# KADAM ENVIRONMENTAL CONSULTANTS

An ISO 9001-2015 Certified Company (MoEF Approved)

871/B/3, Near Himalaya Machinery, GIDC Makarpura, Vadodara-10.
Phone : (O) 0265 - 6131000, 6131001


## ENVIRONMENTAL MONITORING REPORT

### LABORATORY TEST REPORT - STACK EMMISION

**REPORT NO.: AUG23/098/15**

### SAMPLE DETAILS

| | | | |
|---|---|---|---|
| 1. | Name & Address of Client: Bharat Petroleum Corporation Ltd. Bina Refinery, Village: Agasod, Bina - 470124, Dist: Sagar, Madhya Pradesh, India. | | |
| 2. | Sample ID: 2148088246-098AU23SE02 | 3. | Client Representative: Mr. Anil Medhe |
| 4. | Sample Date: 16.08.2023 | 5. | Sampling Location: DCU |
| 6. | Sampling Time: 15:00 hr | 7. | Sampling Duration: 48 Mins |
| 8. | Analysis commenced on: 21.08.2023 | 9. | Analysis Completed on: 21.08.2023 |
| 10. | Reporting Date: 28.08.2023 | 11. | Discipline: Chemical |
| 12. | Sample Collected By: Mr. Jitendra Sinha | 13. | Group: Atmospheric Pollution |
| 14. | Sampling Procedure: IS: 11255 Method | 15. | Product: Stack Emission |
| 16. | Description of Sample: Sampling Bottles: Sealed √ | Thimble:Packed√ | Bladder: Clamped √ |
| 17. | Sample Received Date: 21.08.2023 | | |

### STACK DETAILS

| S.No. | Parameters | Unit (SI) | | Description |
|---|---|---|---|---|
| 1. | Source | | : | **DCU (Common Stack for Coker Feed Heaters A&B)** |
| 2. | Height | m | : | 60 (From Ground level) |
| 3. | Diameter | m | : | 2.18 |
| 4. | Temperature | °c | : | 173 |
| 5. | Velocity | m/s | : | 12.29 |
| 6. | Type of fuel used | | : | Fuel Oil + Fuel Gas |
| 7. | Quantity of fuel used | Kg/hr | : | 0.0 (F.Oil) + 2226.78 (F.Gas) |
| 8. | Gas Flow rate | $Nm^3/hr.$ | : | 110380.1 |

| S.No. | Parameters | Unit | | Results | Specification/ SPCB Norms | Method Used |
|---|---|---|---|---|---|---|
| 1. | Vanadium | $mg/Nm^3$ | : | N.D. | 5 | APHA 23rd Edition 3500-V B |

Remark:(1) Flow Rate for PM – 20 LPM (2) Flow Rate for Gaseous sampling – 2 LPM (3) Calorific Value in Kcal/kg (i) F.Oil – 10264(ii)F.Gas - 12077 (4) The Specification is computed based on the heat supplied by Gas & Liquid Fuels. **N.D. - Not Detected.**

**Authorized By :-**

**Name : Bhaviska Pandya** | **Designation : Sr.Chemist**

NOTE:
1) Reports may be reproduced, if required, but only in full and only with written approval of the laboratory.
2) Re analysis of sample will be done, if requested within 7 days from the date of Reporting of sample if the samples are not consumed during analysis.
3) The results reported above relate to the sample identified under Sample Details.

----------END OF REPORT----------

KADAM ENVIRONMENTAL CONSULTANTS
An ISO 9001-2015 Certified Company (MoEF Approved)
871/B/3, Near Himalaya Machinery, GIDC Makarpura, Vadodara-10.
Phone : (O) 0265 - 6131000, 6131001

TC-7099

## ENVIRONMENTAL MONITORING REPORT

### LABORATORY TEST REPORT - STACK EMMISION

REPORT NO.: AUG23/098/09 (ULR- TC709923000016708F)

### SAMPLE DETAILS

| | | | |
|---|---|---|---|
| 1. | Name & Address of Client: Bharat Petroleum Corporation Ltd. Bina Refinery, Village: Agasod, Bina - 470124, Dist: Sagar, Madhya Pradesh, India. | | |
| 2. | Sample ID: 2148088246-098AU23SE09 | 3. | Client Representative: Mr. Anil Medhe |
| 4. | Sample Date: 17.08.2023 | 5. | Sampling Location: CPP Boiler – I |
| 6. | Sampling Time: 12:30 hr | 7. | Sampling Duration: 35 Mins |
| 8. | Analysis commenced on: 21.08.2023 | 9. | Analysis Completed on: 21.08.2023 |
| 10. | Reporting Date: 28.08.2023 | 11. | Discipline: Chemical |
| 12. | Sample Collected By: Mr. Jitendra Sinha | 13. | Group: Atmospheric Pollution |
| 14. | Sampling Procedure: IS: 11255 Method | 15. | Product: Stack Emission |
| 16. | Description of Sample: Sampling Bottles: Sealed √ | Thimble:Packed√ | Bladder: Clamped √ |
| 17. | Sample Received Date: 21.08.2023 | | |

### STACK DETAILS

| S.No. | Parameters | Unit (SI) | | Description |
|---|---|---|---|---|
| 1. | Source | | : | **CPP Boiler - I** |
| 2. | Height | m | : | 100 |
| 3. | Diameter | m | : | 3.87 |
| 4. | Temperature | °c | : | 162 |
| 5. | Velocity | m/s | : | 17.17 |
| 6. | Type of fuel used | | : | Pet Coke + Coal |
| 7. | Quantity of fuel used | Kg/hr | : | 380 (Pet Coke) + 0.0 (Coal) |
| 8. | Gas Flow rate | $Nm^3/hr.$ | : | 498669.3 |

| S.No. | Parameters | Unit | | Results | Specification/ SPCB Norms | Method Used |
|---|---|---|---|---|---|---|
| 1. | Particulate Matter | $mg/Nm^3$ | : | 38 | 50 | IS 11255 (Part 1) : 1985 |
| 2. | Sulphur Dioxide($SO_2$) | $mg/Nm^3$ | : | 215.88 | 600 | IS 11255 (Part 2) : 1985 |
| 3. | Oxides of Nitrogen (NOx) | $mg/Nm^3$ | : | 227.79 | 450 | IS 11255 (Part 7) : 2005 |
| 4. | CO | $mg/Nm^3$ | : | 20.39 | N.A. | IS 11255 (Part 3): 2008 |

**Remark: (1) Flow Rate for PM – 21 LPM (2) Flow Rate for Gaseous sampling – 2 LPM.**

**Authorized By -**

**Name : Bhavisha Pandya** **Designation : Sr.Chemist**

NOTE:
1) Reports may be reproduced, if required, but only in full and only with written approval of the laboratory.
2) Re analysis of sample will be done, if requested within 7 days from the date of Reporting of sample if the samples are not consumed during analysis.
3) The results reported above relate to the sample identified under Sample Details.

----------END OF REPORT----------

# KADAM ENVIRONMENTAL CONSULTANTS

An ISO 9001-2015 Certified Company (MoEF Approved)

871/B/3, Near Himalaya Machinery, GIDC Makarpura, Vadodara-10.
Phone : (O) 0265 - 6131000, 6131001


## ENVIRONMENTAL MONITORING REPORT

### LABORATORY TEST REPORT - STACK EMMISION

REPORT NO.: AUG23/098/22

### SAMPLE DETAILS

| | | | |
|---|---|---|---|
| 1. | Name & Address of Client: Bharat Petroleum Corporation Ltd. Bina Refinery, Village: Agasod, Bina - 470124, Dist: Sagar, Madhya Pradesh, India. | | |
| 2. | Sample ID: 2148088246-098AU23SE09 | 3. | Client Representative: Mr. Anil Medhe |
| 4. | Sample Date: 17.08.2023 | 5. | Sampling Location: CPP Boiler – I |
| 6. | Sampling Time: 12:30 hr | 7. | Sampling Duration: 35 Mins |
| 8. | Analysis commenced on: 21.08.2023 | 9. | Analysis Completed on: 21.08.2023 |
| 10. | Reporting Date: 28.08.2023 | 11. | Discipline: Chemical |
| 12. | Sample Collected By: Mr. Jitendra Sinha | 13. | Group: Atmospheric Pollution |
| 14. | Sampling Procedure: IS: 11255 Method | 15. | Product: Stack Emission |
| 16. | Description of Sample: Sampling Bottles: Sealed √ | Thimble:Packed√ | Bladder: Clamped √ |
| 17. | Sample Received Date: 21.08.2023 | | |

### STACK DETAILS

| S.No. | Parameters | Unit (SI) | | Description |
|---|---|---|---|---|
| 1. | Source | | : | **CPP Boiler - I** |
| 2. | Height | m | : | 100 |
| 3. | Diameter | m | : | 3.87 |
| 4. | Temperature | °c | : | 162 |
| 5. | Velocity | m/s | : | 17.17 |
| 6. | Type of fuel used | | : | Pet Coke + Coal |
| 7. | Quantity of fuel used | Kg/hr | : | 380 (Pet Coke) + 0.0 (Coal) |
| 8. | Gas Flow rate | $Nm^3/hr.$ | : | 498669.3 |

| S.No. | Parameters | Unit | | Results | Specification/ SPCB Norms | Method Used |
|---|---|---|---|---|---|---|
| 1. | Mercury | $mg/Nm^3$ | : | <0.02 | 0.03 | APHA 23rd Edition 3112-B |

**Remark: (1) Flow Rate for PM – 21 LPM (2) Flow Rate for Gaseous sampling – 2 LPM.**

**Authorized By -**

**Name : Bhavisha Pandya** **Designation : Sr.Chemist**

NOTE:
1) Reports may be reproduced, if required, but only in full and only with written approval of the laboratory.
2) Re analysis of sample will be done, if requested within 7 days from the date of Reporting of sample if the samples are not consumed during analysis.
3) The results reported above relate to the sample identified under Sample Details.

----------END OF REPORT----------

KADAM ENVIRONMENTAL CONSULTANTS
An ISO 9001-2015 Certified Company (MoEF Approved)
871/B/3, Near Himalaya Machinery, GIDC Makarpura, Vadodara-10.
Phone : (O) 0265 - 6131000, 6131001

TC-7098

## ENVIRONMENTAL MONITORING REPORT

### LABORATORY TEST REPORT - STACK EMMISION

REPORT NO.: AUG23/098/10 (ULR- TC709923000016709F)

### SAMPLE DETAILS

| | | | |
|---|---|---|---|
| 1. | Name & Address of Client: Bharat Petroleum Corporation Ltd. Bina Refinery, Village: Agasod, Bina - 470124, Dist: Sagar, Madhya Pradesh, India. | | |
| 2. | Sample ID: 2148088246–098AU23SE10 | 3. | Client Representative: Mr. Anil Medhe |
| 4. | Sample Date: 17.08.2023 | 5. | Sampling Location: CPP Boiler - II |
| 6. | Sampling Time: - | 7. | Sampling Duration: - |
| 8. | Analysis commenced on: - | 9. | Analysis Completed on: - |
| 10. | Reporting Date: 28.08.2023 | 11. | Discipline: Chemical |
| 12. | Sample Collected By: Mr. Jitendra Sinha | 13. | Group: Atmospheric Pollution |
| 14. | Sampling Procedure: IS: 11255 Method | 15. | Product: Stack Emission |
| 16. | Description of Sample: Sampling Bottles: Sealed √ | Thimble:Packed√ | Bladder: Clamped √ |
| 17. | Sample Received Date: - | | |

### STACK DETAILS

| S.No. | Parameters | Unit (SI) | | Description |
|---|---|---|---|---|
| 1. | Source | | : | **CPP Boiler - II** |
| 2. | Height | m | : | 100 |
| 3. | Diameter | m | : | 3.87 |
| 4. | Temperature | °c | : | - |
| 5. | Velocity | m/s | : | - |
| 6. | Type of fuel used | | : | - |
| 7. | Quantity of fuel used | MT/day | : | - |
| 8. | Gas Flow rate | $Nm^3/hr.$ | : | - |

| S.No. | Parameters | Unit | | Results | Specification/ SPCB Norms | Method Used |
|---|---|---|---|---|---|---|
| 1. | Particulate Matter | $mg/Nm^3$ | : | - | 50 | IS 11255 (Part 1) : 1985 |
| 2. | Sulphur Dioxide($SO_2$) | $mg/Nm^3$ | : | - | 600 | IS 11255 (Part 2) : 1985 |
| 3. | Oxides of Nitrogen (NOx) | $mg/Nm^3$ | : | - | 450 | IS 11255 (Part 7) : 2005 |
| 4. | CO | $mg/Nm^3$ | : | - | N.A. | IS 11255 (Part 3): 2008 |

**Remark: Boiler was under Shutdown during the sampling period.**

**Authorized By -**

**Name : Bhavisha Pandya** | **Designation : Sr.Chemist**

NOTE:
1) Reports may be reproduced, if required, but only in full and only with written approval of the laboratory.
2) Re analysis of sample will be done, if requested within 7 days from the date of Reporting of sample if the samples are not consumed during analysis.
3) The results reported above relate to the sample identified under Sample Details.

----------END OF REPORT----------

# KADAM ENVIRONMENTAL CONSULTANTS

An ISO 9001-2015 Certified Company (MoEF Approved)

871/B/3, Near Himalaya Machinery, GIDC Makarpura, Vadodara-10.
Phone : (O) 0265 - 6131000, 6131001


**ENVIRONMENTAL MONITORING REPORT**

## LABORATORY TEST REPORT - STACK EMMISION

**REPORT NO.: AUG23/098/23**

### SAMPLE DETAILS

| | | | |
|---|---|---|---|
| 1. | Name & Address of Client: Bharat Petroleum Corporation Ltd. Bina Refinery, Village: Agasod, Bina - 470124, Dist: Sagar, Madhya Pradesh, India. | | |
| 2. | Sample ID: 2148088246-098AU23SE10 | 3. | Client Representative: Mr. Anil Medhe |
| 4. | Sample Date: 17.08.2023 | 5. | Sampling Location: CPP Boiler - II |
| 6. | Sampling Time: - | 7. | Sampling Duration: - |
| 8. | Analysis commenced on: - | 9. | Analysis Completed on: - |
| 10. | Reporting Date: 28.08.2023 | 11. | Discipline: Chemical |
| 12. | Sample Collected By: Mr. Jitendra Sinha | 13. | Group: Atmospheric Pollution |
| 14. | Sampling Procedure: IS: 11255 Method | 15. | Product: Stack Emission |
| 16. | Description of Sample: | Sampling Bottles: Sealed √ | Thimble:Packed√ / Bladder: Clamped √ |
| 17. | Sample Received Date: - | | |

### STACK DETAILS

| S.No. | Parameters | Unit (SI) | | Description |
|---|---|---|---|---|
| 1. | Source | | : | **CPP Boiler - II** |
| 2. | Height | m | : | 100 |
| 3. | Diameter | m | : | 3.87 |
| 4. | Temperature | °C | : | - |
| 5. | Velocity | m/s | : | - |
| 6. | Type of fuel used | | : | - |
| 7. | Quantity of fuel used | MT/day | : | - |
| 8. | Gas Flow rate | $Nm^3/hr.$ | : | - |

| S.No. | Parameters | Unit | | Results | Specification/ SPCB Norms | Method Used |
|---|---|---|---|---|---|---|
| 1. | Mercury | $mg/Nm^3$ | : | - | 0.03 | APHA 23rd Edition 3112-B |

**Remark: Boiler was under Shutdown during the sampling period.**

**Authorized By -**

**Name : Bhavisha Pandya** **Designation : Sr.Chemist**

NOTE:
1) Reports may be reproduced, if required, but only in full and only with written approval of the laboratory.
2) Re analysis of sample will be done, if requested within 7 days from the date of Reporting of sample if the samples are not consumed during analysis.
3) The results reported above relate to the sample identified under Sample Details.

----------END OF REPORT----------

## LABORATORY TEST REPORT - STACK EMMISION

REPORT NO.: AUG23/098/11 (ULR- TC709923000016710F)

### SAMPLE DETAILS

| | | | |
|---|---|---|---|
| 1. | Name & Address of Client: Bharat Petroleum Corporation Ltd. Bina Refinery, Village: Agasod, Bina - 470124, Dist: Sagar, Madhya Pradesh, India. | | |
| 2. | Sample ID: 2148088246–098AU23SE11 | 3. | Client Representative: Mr. Anil Medhe |
| 4. | Sample Date: 17.08.2023 | 5. | Sampling Location: CPP Boiler - III |
| 6. | Sampling Time: 13:20 hr | 7. | Sampling Duration: 36 Mins |
| 8. | Analysis commenced on: 21.08.2023 | 9. | Analysis Completed on: 21.08.2023 |
| 10. | Reporting Date: 28.08.2023 | 11. | Discipline: Chemical |
| 12. | Sample Collected By: Mr. Jitendra Sinha | 13. | Group: Atmospheric Pollution |
| 14. | Sampling Procedure: IS: 11255 Method | 15. | Product: Stack Emission |
| 16. | Description of Sample: Sampling Bottles: Sealed √ | Thimble: Packed √ | Bladder: Clamped √ |
| 17. | Sample Received Date: 21.08.2023 | | |

### STACK DETAILS

| S.No. | Parameters | Unit (SI) | | Description |
|---|---|---|---|---|
| 1. | Source | | : | **CPP Boiler - III** |
| 2. | Height | m | : | 100 |
| 3. | Diameter | m | : | 3.87 |
| 4. | Temperature | °c | : | 154 |
| 5. | Velocity | m/s | : | 16.71 |
| 6. | Type of fuel used | | : | Pet Coke + Coal |
| 7. | Quantity of fuel used | MT/day | : | 380 (Pet Coke) + 0.0 (Coal) |
| 8. | Gas Flow rate | $Nm^3/hr.$ | : | 494376.8 |

| S.No. | Parameters | Unit | | Results | Specification/ SPCB Norms | Method Used |
|---|---|---|---|---|---|---|
| 1. | Particulate Matter | $mg/Nm^3$ | : | 23 | 50 | IS 11255 (Part 1) : 1985 |
| 2. | Sulphur Dioxide($SO_2$) | $mg/Nm^3$ | : | 205.12 | 600 | IS 11255 (Part 2) : 1985 |
| 3. | Oxides of Nitrogen (NOx) | $mg/Nm^3$ | : | 339.54 | 450 | IS 11255 (Part 7) : 2005 |
| 4. | CO | $mg/Nm^3$ | : | 17.08 | N.A. | IS 11255 (Part 3): 2008 |

**Remark: (1) Flow Rate for PM – 21 LPM (2) Flow Rate for Gaseous sampling – 2 LPM.**

**Authorized By -**

**Name : Bhavisha Pandya** **Designation : Sr.Chemist**

NOTE:
1) Reports may be reproduced, if required, but only in full and only with written approval of the laboratory.
2) Re analysis of sample will be done, if requested within 7 days from the date of Reporting of sample if the samples are not consumed during analysis.
3) The results reported above relate to the sample identified under Sample Details.

----------END OF REPORT----------

# KADAM ENVIRONMENTAL CONSULTANTS

An ISO 9001-2015 Certified Company (MoEF Approved)

871/B/3, Near Himalaya Machinery, GIDC Makarpura, Vadodara-10.
Phone : (O) 0265 - 6131000, 6131001


## ENVIRONMENTAL MONITORING REPORT

### LABORATORY TEST REPORT - STACK EMMISION

REPORT NO.: AUG23/098/24

### SAMPLE DETAILS

| | | | |
|---|---|---|---|
| 1. | Name & Address of Client: Bharat Petroleum Corporation Ltd. Bina Refinery, Village: Agasod, Bina - 470124, Dist: Sagar, Madhya Pradesh, India. | | |
| 2. | Sample ID: 2148088246-098AU23SE11 | 3. | Client Representative: Mr. Anil Medhe |
| 4. | Sample Date: 17.08.2023 | 5. | Sampling Location: CPP Boiler - III |
| 6. | Sampling Time: 13:20 hr | 7. | Sampling Duration: 36 Mins |
| 8. | Analysis commenced on: 21.08.2023 | 9. | Analysis Completed on: 21.08.2023 |
| 10. | Reporting Date: 28.08.2023 | 11. | Discipline: Chemical |
| 12. | Sample Collected By: Mr. Jitendra Sinha | 13. | Group: Atmospheric Pollution |
| 14. | Sampling Procedure: IS: 11255 Method | 15. | Product: Stack Emission |
| 16. | Description of Sample: Sampling Bottles: Sealed √ | Thimble:Packed√ | Bladder: Clamped √ |
| 17. | Sample Received Date: 21.08.2023 | | |

### STACK DETAILS

| S.No. | Parameters | Unit (SI) | | Description |
|---|---|---|---|---|
| 1. | Source | | : | **CPP Boiler - III** |
| 2. | Height | m | : | 100 |
| 3. | Diameter | m | : | 3.87 |
| 4. | Temperature | °c | : | 154 |
| 5. | Velocity | m/s | : | 16.71 |
| 6. | Type of fuel used | | : | Pet Coke + Coal |
| 7. | Quantity of fuel used | Kg/hr | : | 380 (Pet Coke) + 0.0 (Coal) |
| 8. | Gas Flow rate | $Nm^3/hr.$ | : | 494376.8 |

| S.No. | Parameters | Unit | | Results | Specification/ SPCB Norms | Method Used |
|---|---|---|---|---|---|---|
| 1. | Mercury | $mg/Nm^3$ | : | <0.02 | 0.03 | APHA 23rd Edition 3112-B |

**Remark: (1) Flow Rate for PM – 21 LPM (2) Flow Rate for Gaseous sampling – 2 LPM.**

**Authorized By -**

**Name : Bhavisha Pandya** **Designation : Sr.Chemist**

NOTE:
1) Reports may be reproduced, if required, but only in full and only with written approval of the laboratory.
2) Re analysis of sample will be done, if requested within 7 days from the date of Reporting of sample if the samples are not consumed during analysis.
3) The results reported above relate to the sample identified under Sample Details.

----------END OF REPORT----------

## LABORATORY TEST REPORT - STACK EMMISION

**REPORT NO.: AUG23/098/08 (ULR- TC709923000016707F)**

### SAMPLE DETAILS

| | | | |
|---|---|---|---|
| 1. | Name & Address of Client: Bharat Petroleum Corporation Ltd. Bina Refinery, Village: Agasod, Bina - 470124, Dist: Sagar, Madhya Pradesh, India. | | |
| 2. | Sample ID: 2148088246-098AU23SE08 | 3. | Client Representative: Mr. Anil Medhe |
| 4. | Sample Date: 14.08.2023 | 5. | Sampling Location: SRU |
| 6. | Sampling Time: 16:20 hr | 7. | Sampling Duration: 42 Mins |
| 8. | Analysis commenced on: 21.08.2023 | 9. | Analysis Completed on: 21.08.2023 |
| 10. | Reporting Date: 28.08.2023 | 11. | Discipline: Chemical |
| 12. | Sample Collected By: Mr. Jitendra Sinha | 13. | Group: Atmospheric Pollution |
| 14. | Sampling Procedure: IS: 11255 Method | 15. | Product: Stack Emission |
| 16. | Description of Sample: Sampling Bottles: Sealed √ | Thimble:Packed | Bladder: Clamped √ |
| 17. | Sample Received Date: 21.08.2023 | | |

### STACK DETAILS

| S.No. | Parameters | Unit (SI) | | Description |
|---|---|---|---|---|
| 1. | Source | | : | **SRU** |
| 2. | Height | m | : | 80 |
| 3. | Diameter | m | : | 1.23 |
| 4. | Temperature | °c | : | 270 |
| 5. | Velocity | m/s | : | 13.88 |
| 6. | Type of fuel used | | : | Fuel Gas |
| 7. | Quantity of fuel used | Kg/hr | : | 625.5 (F.Gas) |
| 8. | Gas Flow rate | $Nm^3/hr.$ | : | 32596.9 |

| S.No. | Parameters | Unit | | Results | Specification/ SPCB Norms | Method Used |
|---|---|---|---|---|---|---|
| 1. | Particulate Matter | $mg/Nm^3$ | : | 37 | N.A. | IS 11255 (Part 1) : 1985 |
| 2. | Sulphur Dioxide($SO_2$) | $mg/Nm^3$ | : | 324.38 | N.A. | IS 11255 (Part 2) : 1985 |
| 3. | Oxides of Nitrogen (NOx) | $mg/Nm^3$ | : | 112.48 | 250 | IS 11255 (Part 7) : 2005 |
| 4. | CO | $mg/Nm^3$ | : | 3.41 | 100 | IS 11255 (Part 3): 2008 |
| 5. | Nickel | $mg/Nm^3$ | : | N.D. | N.A | USEPA(2000)-Method 29 |
| 6. | $H_2S$ | $mg/Nm^3$ | : | 3.12 | 10 | IS 11255 (Part-4): 2006 |

Remark:(1) Flow Rate for PM – 21 LPM (2) Flow Rate for Gaseous sampling – 2 LPM (3) Calorific Value in Kcal/kg (i) F.Oil – 10264(ii)F.Gas - 12077 (4) The Specification is computed based on the heat supplied by Gas & Liquid Fuels. N.D. - Not Detected.

**Authorized By -**

**Name : Bhavisha Pandya** | **Designation : Sr.Chemist**

NOTE:
1) Reports may be reproduced, if required, but only in full and only with written approval of the laboratory.
2) Re analysis of sample will be done, if requested within 7 days from the date of Reporting of sample if the samples are not consumed during analysis.
3) The results reported above relate to the sample identified under Sample Details.

----------END OF REPORT----------

# KADAM ENVIRONMENTAL CONSULTANTS

An ISO 9001-2015 Certified Company (MoEF Approved)

871/B/3, Near Himalaya Machinery, GIDC Makarpura, Vadodara-10.
Phone : (O) 0265 - 6131000, 6131001


**ENVIRONMENTAL MONITORING REPORT**

## LABORATORY TEST REPORT - STACK EMMISION

**REPORT NO.: AUG23/098/21**

### SAMPLE DETAILS

| | | | |
|---|---|---|---|
| 1. | Name & Address of Client: Bharat Petroleum Corporation Ltd. Bina Refinery, Village: Agasod, Bina - 470124, Dist: Sagar, Madhya Pradesh, India. | | |
| 2. | Sample ID: 2148088246-098AU23SE08 | 3. | Client Representative: Mr. Anil Medhe |
| 4. | Sample Date: 14.08.2023 | 5. | Sampling Location: SRU |
| 6. | Sampling Time: 16:20 hr | 7. | Sampling Duration: 42 Mins |
| 8. | Analysis commenced on: 21.08.2023 | 9. | Analysis Completed on: 21.08.2023 |
| 10. | Reporting Date: 28.08.2023 | 11. | Discipline: Chemical |
| 12. | Sample Collected By: Mr. Jitendra Sinha | 13. | Group: Atmospheric Pollution |
| 14. | Sampling Procedure: IS: 11255 Method | 15. | Product: Stack Emission |
| 16. | Description of Sample: Sampling Bottles: Sealed √ | Thimble:Packed√ | Bladder: Clamped √ |
| 17. | Sample Received Date: 21.08.2023 | | |

### STACK DETAILS

| S.No. | Parameters | Unit (SI) | | Description |
|---|---|---|---|---|
| 1. | Source | | : | **SRU** |
| 2. | Height | m | : | 80 |
| 3. | Diameter | m | : | 1.23 |
| 4. | Temperature | °c | : | 270 |
| 5. | Velocity | m/s | : | 13.88 |
| 6. | Type of fuel used | | : | Fuel Gas |
| 7. | Quantity of fuel used | Kg/hr | : | 625.5 (F.Gas) |
| 8. | Gas Flow rate | $Nm^3/hr.$ | : | 32596.9 |

| S.No. | Parameters | Unit | | Results | Specification/ SPCB Norms | Method Used |
|---|---|---|---|---|---|---|
| 1. | Vanadium | $mg/Nm^3$ | : | N.D. | 5 | APHA 23rd Edition 3500-V B |

Remark:(1) Flow Rate for PM – 21 LPM (2) Flow Rate for Gaseous sampling – 2 LPM (3) Calorific Value in Kcal/kg (i) F.Oil – 10264(ii)F.Gas - 12077 (4) The Specification is computed based on the heat supplied by Gas & Liquid Fuels. **N.D. - Not Detected.**

**Authorized By -**

**Name : Bhavisha Pandya** | **Designation : Sr.Chemist**

NOTE:
1) Reports may be reproduced, if required, but only in full and only with written approval of the laboratory.
2) Re analysis of sample will be done, if requested within 7 days from the date of Reporting of sample if the samples are not consumed during analysis.
3) The results reported above relate to the sample identified under Sample Details.

----------END OF REPORT----------

## LABORATORY TEST REPORT - STACK EMMISION

**REPORT NO.: AUG23/098/13 (ULR- TC709923000016712F)**

### SAMPLE DETAILS

| | | | |
|---|---|---|---|
| 1. | Name & Address of Client: Bharat Petroleum Corporation Ltd.<br>Bina Refinery, Village: Agasod, Bina - 470124, Dist: Sagar, Madhya Pradesh, India. | | |
| 2. | Sample ID: 2148088246-098AU23SE13 | 3. | Client Representative: Mr. Anil Medhe |
| 4. | Sample Date: 14.08.2023 | 5. | Sampling Location: KHDS |
| 6. | Sampling Time: 15:00 hr | 7. | Sampling Duration: 46 Mins |
| 8. | Analysis commenced on: 21.08.2023 | 9. | Analysis Completed on: 21.08.2023 |
| 10. | Reporting Date: 28.08.2023 | 11. | Discipline: Chemical |
| 12. | Sample Collected By: Mr. Jitendra Sinha | 13. | Group: Atmospheric Pollution |
| 14. | Sampling Procedure: IS: 11255 Method | 15. | Product: Stack Emission |
| 16. | Description of Sample: Sampling Bottles: Sealed √ | Thimble:Packed√ | Bladder: Clamped √ |
| 17. | Sample Received Date: 21.08.2023 | | |

### STACK DETAILS

| S.No. | Parameters | Unit (SI) | | Description |
|---|---|---|---|---|
| 1. | Source | | : | **KHDS** |
| 2. | Height | m | : | 60 |
| 3. | Diameter | m | : | 1.59 |
| 4. | Temperature | °c | : | 245 |
| 5. | Velocity | m/s | : | 13.25 |
| 6. | Type of fuel used | | : | Fuel Oil + Fuel Gas |
| 7. | Quantity of fuel used | Kg/hr | : | 0.0 (F.Oil) + 417 (F.Gas) |
| 8. | Gas Flow rate | $Nm^3$/hr. | : | 54503.4 |

| S.No. | Parameters | Unit | | Results | Specification/ SPCB Norms | Method Used |
|---|---|---|---|---|---|---|
| 1. | Particulate Matter | $mg/Nm^3$ | : | 4 | 5 | IS 11255 (Part 1) : 1985 |
| 2. | Sulphur Dioxide($SO_2$) | $mg/Nm^3$ | : | 45.64 | 50 | IS 11255 (Part 2) : 1985 |
| 3. | Oxides of Nitrogen (NOx) | $mg/Nm^3$ | : | 229.70 | 250 | IS 11255 (Part 7) : 2005 |
| 4. | CO | $mg/Nm^3$ | : | 3.90 | 100 | IS 11255 (Part 3): 2008 |
| 5. | Nickel | $mg/Nm^3$ | : | N.D. | N.A. | USEPA(2000)-Method 29 |
| 6. | $H_2S$ | $mg/Nm^3$ | : | N.D. | N.A. | IS 11255 (Part-4): 2006 |

**Remark: (1) Flow Rate for PM – 21 LPM (2) Flow Rate for Gaseous sampling – 2 LPM. / N.D. - Not Detected.**

**Authorized By -**

**Name : Bhavisha Pandya** | **Designation : Sr.Chemist**

NOTE:
1) Reports may be reproduced, if required, but only in full and only with written approval of the laboratory.
2) Re analysis of sample will be done, if requested within 7 days from the date of Reporting of sample if the samples are not consumed during analysis.
3) The results reported above relate to the sample identified under Sample Details.

----------END OF REPORT----------

# KADAM ENVIRONMENTAL CONSULTANTS

An ISO 9001-2015 Certified Company (MoEF Approved)

871/B/3, Near Himalaya Machinery, GIDC Makarpura, Vadodara-10.
Phone : (O) 0265 - 6131000, 6131001


## ENVIRONMENTAL MONITORING REPORT

### LABORATORY TEST REPORT - STACK EMMISION

REPORT NO.: AUG23/098/26

### SAMPLE DETAILS

| | | | |
|---|---|---|---|
| 1. | Name & Address of Client: Bharat Petroleum Corporation Ltd. Bina Refinery, Village: Agasod, Bina - 470124, Dist: Sagar, Madhya Pradesh, India. | | |
| 2. | Sample ID: 2148088246-098AU23SE13 | 3. | Client Representative: Mr. Anil Medhe |
| 4. | Sample Date: 14.08.2023 | 5. | Sampling Location: KHDS |
| 6. | Sampling Time: 15:00 hr | 7. | Sampling Duration: 46 Mins |
| 8. | Analysis commenced on: 21.08.2023 | 9. | Analysis Completed on: 21.08.2023 |
| 10. | Reporting Date: 28.08.2023 | 11. | Discipline: Chemical |
| 12. | Sample Collected By: Mr. Jitendra Sinha | 13. | Group: Atmospheric Pollution |
| 14. | Sampling Procedure: IS: 11255 Method | 15. | Product: Stack Emission |
| 16. | Description of Sample: Sampling Bottles: Sealed √ | Thimble:Packed√ | Bladder: Clamped √ |
| 17. | Sample Received Date: 21.08.2023 | | |

### STACK DETAILS

| S.No. | Parameters | Unit (SI) | | Description |
|---|---|---|---|---|
| 1. | Source | | : | **KHDS** |
| 2. | Height | m | : | 60 |
| 3. | Diameter | m | : | 1.59 |
| 4. | Temperature | °c | : | 245 |
| 5. | Velocity | m/s | : | 13.25 |
| 6. | Type of fuel used | | : | Fuel Oil + Fuel Gas |
| 7. | Quantity of fuel used | Kg/hr | : | 0.0 (F.Oil) + 417 (F.Gas) |
| 8. | Gas Flow rate | $Nm^3/hr.$ | : | 54503.4 |

| S.No. | Parameters | Unit | | Results | Specification/ SPCB Norms | Method Used |
|---|---|---|---|---|---|---|
| 1. | Vanadium | $mg/Nm^3$ | : | N.D. | 5 | APHA 23rd Edition 3500-V B |

Remark:(1) Flow Rate for PM – 21 LPM (2) Flow Rate for Gaseous sampling – 2 LPM (3) Calorific Value in Kcal/kg (i) F.Oil – 10264(ii)F.Gas - 12077 (4) The Specification is computed based on the heat supplied by Gas & Liquid Fuels. **N.D. - Not Detected.**

**Authorized By -**

**Name : Bhavisha Pandya** | **Designation : Sr.Chemist**

NOTE:
1) Reports may be reproduced, if required, but only in full and only with written approval of the laboratory.
2) Re analysis of sample will be done, if requested within 7 days from the date of Reporting of sample if the samples are not consumed during analysis.
3) The results reported above relate to the sample identified under Sample Details.

----------END OF REPORT----------

## LABORATORY TEST REPORT - STACK EMMISION

**REPORT NO.: AUG23/098/12 (ULR- TC709923000016711F)**

### SAMPLE DETAILS

| | | | |
|---|---|---|---|
| 1. | Name & Address of Client: Bharat Petroleum Corporation Ltd. Bina Refinery, Village: Agasod, Bina - 470124, Dist: Sagar, Madhya Pradesh, India. | | |
| 2. | Sample ID: 2148088246-098AU23SE12 | 3. | Client Representative: Mr. Anil Medhe |
| 4. | Sample Date: 17.08.2023 | 5. | Sampling Location: Utility Boiler |
| 6. | Sampling Time: 15:20 hr | 7. | Sampling Duration: 50 Mins |
| 8. | Analysis commenced on: 21.08.2023 | 9. | Analysis Completed on: 21.08.2023 |
| 10. | Reporting Date: 28.08.2023 | 11. | Discipline: Chemical |
| 12. | Sample Collected By: Mr. Jitendra Sinha | 13. | Group: Atmospheric Pollution |
| 14. | Sampling Procedure: IS: 11255 Method | 15. | Product: Stack Emission |
| 16. | Description of Sample: Sampling Bottles: Sealed √ | Thimble:Packed√ | Bladder: Clamped √ |
| 17. | Sample Received Date: 21.08.2023 | | |

### STACK DETAILS

| S.No. | Parameters | Unit (SI) | | Description |
|---|---|---|---|---|
| 1. | Source | | : | **Utility Boiler** |
| 2. | Height | m | : | 123 |
| 3. | Diameter | m | : | 2.67 |
| 4. | Temperature | °c | : | 123 |
| 5. | Velocity | m/s | : | 11.65 |
| 6. | Type of fuel used | | : | Fuel Oil + Fuel Gas |
| 7. | Quantity of fuel used | Kg/hr | : | 1359.42 (F.Oil) + 0.0 (F.Gas) |
| 8. | Gas Flow rate | $Nm^3/hr.$ | : | 176756.1 |

| S.No. | Parameters | Unit | | Results | Specification/ SPCB Norms | Method Used |
|---|---|---|---|---|---|---|
| 1. | Particulate Matter | $mg/Nm^3$ | : | 34 | 50 | IS 11255 (Part 1) : 1985 |
| 2. | Sulphur Dioxide($SO_2$) | $mg/Nm^3$ | : | 470.79 | 850 | IS 11255 (Part 2) : 1985 |
| 3. | Oxides of Nitrogen (NOx) | $mg/Nm^3$ | : | 84.20 | 350 | IS 11255 (Part 7) : 2005 |
| 4. | CO | $mg/Nm^3$ | : | 7.36 | 150 | IS 11255 (Part 3): 2008 |
| 5. | Nickel | $mg/Nm^3$ | : | N.D. | N.A | USEPA(2000)-Method 29 |

**Remark: (1) Flow Rate for PM – 21 LPM (2) Flow Rate for Gaseous sampling – 2 LPM.** / **N.D. - Not Detected.**

**Authorized By -**

**Name : Bhavisha Pandya** | **Designation : Sr.Chemist**

NOTE:
1) Reports may be reproduced, if required, but only in full and only with written approval of the laboratory.
2) Re analysis of sample will be done, if requested within 7 days from the date of Reporting of sample if the samples are not consumed during analysis.
3) The results reported above relate to the sample identified under Sample Details.

----------END OF REPORT----------

# KADAM ENVIRONMENTAL CONSULTANTS

An ISO 9001-2015 Certified Company (MoEF Approved)

871/B/3, Near Himalaya Machinery, GIDC Makarpura, Vadodara-10.
Phone : (O) 0265 - 6131000, 6131001


## ENVIRONMENTAL MONITORING REPORT

### LABORATORY TEST REPORT - STACK EMMISION

REPORT NO.: AUG23/098/25

### SAMPLE DETAILS

| | | | |
|---|---|---|---|
| 1. | Name & Address of Client: Bharat Petroleum Corporation Ltd. Bina Refinery, Village: Agasod, Bina - 470124, Dist: Sagar, Madhya Pradesh, India. | | |
| 2. | Sample ID: 2148088246-098AU23SE12 | 3. | Client Representative: Mr. Anil Medhe |
| 4. | Sample Date: 17.08.2023 | 5. | Sampling Location: Utility Boiler |
| 6. | Sampling Time: 15:20 hr | 7. | Sampling Duration: 50 Mins |
| 8. | Analysis commenced on: 21.08.2023 | 9. | Analysis Completed on: 21.08.2023 |
| 10. | Reporting Date: 28.08.2023 | 11. | Discipline: Chemical |
| 12. | Sample Collected By: Mr. Jitendra Sinha | 13. | Group: Atmospheric Pollution |
| 14. | Sampling Procedure: IS: 11255 Method | 15. | Product: Stack Emission |
| 16. | Description of Sample: Sampling Bottles: Sealed √ | Thimble:Packed√ | Bladder: Clamped √ |
| 17. | Sample Received Date: 21.08.2023 | | |

### STACK DETAILS

| S.No. | Parameters | Unit (SI) | | Description |
|---|---|---|---|---|
| 1. | Source | | : | **Utility Boiler** |
| 2. | Height | m | : | 123 |
| 3. | Diameter | m | : | 2.67 |
| 4. | Temperature | °c | : | 123 |
| 5. | Velocity | m/s | : | 11.65 |
| 6. | Type of fuel used | | : | Fuel Oil + Fuel Gas |
| 7. | Quantity of fuel used | Kg/hr | : | 1359.42 (F.Oil) + 0.0 (F.Gas) |
| 8. | Gas Flow rate | $Nm^3/hr.$ | : | 176756.1 |

| S.No. | Parameters | Unit | | Results | Specification/ SPCB Norms | Method Used |
|---|---|---|---|---|---|---|
| 1. | Vanadium | $mg/Nm^3$ | : | N.D. | 5 | APHA 23rd Edition 3500-V B |

Remark:(1) Flow Rate for PM – 21 LPM (2) Flow Rate for Gaseous sampling – 2 LPM (3) Calorific Value in Kcal/kg (i) F.Oil–10264(ii)F.Gas -12077 (4) The Specification is computed based on the heat supplied by Gas & Liquid Fuels. **N.D. - Not Detected.**

**Authorized By -**

**Name : Bhavisha Pandya** **Designation : Sr.Chemist**

NOTE:
1) Reports may be reproduced, if required, but only in full and only with written approval of the laboratory.
2) Re analysis of sample will be done, if requested within 7 days from the date of Reporting of sample if the samples are not consumed during analysis.
3) The results reported above relate to the sample identified under Sample Details.

----------END OF REPORT----------

## LABORATORY TEST REPORT - STACK

**REPORT NO.: JUN23/016/01 (ULR- TC709923000013707F)**

### SAMPLE DETAILS

| | | | |
|---|---|---|---|
| 1. | Name & Address of Client: Bharat Petroleum Corporation Ltd. Bina Refinery, Village: Agasod, Bina - 470124, Dist: Sagar, Madhya Pradesh, India. | | |
| 2. | Sample ID: 2148088246-016JN23SE01 | 3. | Client Representative: Mr. Anil Medhe |
| 4. | Sample Date: 15.06.2023 | 5. | Sampling Location: CDU/VDU |
| 6. | Sampling Time: 10:40 hr | 7. | Sampling Duration: 46 Mins |
| 8. | Analysis commenced on: 26.06.2023 | 9. | Analysis Completed on: 28.06.2023 |
| 10. | Reporting Date: 15.07.2023 | 11. | Discipline: Chemical |
| 12. | Sample Collected By: Mr. Jitendra Sinha | 13. | Group: Atmospheric Pollution |
| 14. | Sampling Procedure: IS Method | 15. | Product: Stack Emission |
| 16. | Description of Sample: Sampling Bottles: Sealed √ | Thimble:Packed√ | Bladder : Clamped √ |
| 17. | Sample Received Date: 26.06.2023 | | |

### STACK DETAILS

| S.No. | Parameters | Unit (SI) | | Description |
|---|---|---|---|---|
| 1. | Source | | : | **CDU/VDU (Common Stack for Crude and Vacuum Heaters)** |
| 2. | Height | m | : | 100 (From Ground level) |
| 3. | Diameter | m | : | 4.45 |
| 4. | Temperature | °c | : | 287 |
| 5. | Velocity | m/s | : | 13.69 |
| 6. | Type of fuel used | | : | Fuel Oil +Fuel Gas |
| 7. | Quantity of fuel used | Kg/hr | : | 725.58 (F.Oil) + 7122.36 (F.Gas) |
| 8. | Gas Flow rate | $Nm^3$/hr. | | 407977.5 |

| S.No. | Parameters | Unit | | Results | Specification/ SPCB Norms | Method Used |
|---|---|---|---|---|---|---|
| 1. | Particulate Matter | $mg/Nm^3$ | : | 7 | 9 | IS 11255 (Part 1) : 1985 |
| 2. | Sulphur Dioxide($SO_2$) | $mg/Nm^3$ | : | 103.38 | 114 | IS 11255 (Part 2) : 1985 |
| 3. | Oxides of Nitrogen (NOx) | $mg/Nm^3$ | : | 234.23 | 258 | IS 11255 (Part 7) : 2005 |
| 4. | CO | $mg/Nm^3$ | : | 10.79 | 104 | IS 11255 (Part 3): 2008 |
| 5. | Nickel | $mg/Nm^3$ | : | <0.0001 | 5 | USEPA(2000)-Method 29 |
| 6. | $H_2S$ | $mg/Nm^3$ | : | N.D. | N.A. | IS 11255 (Part-4): 2006 |

Remark:(1) Flow Rate for PM – 21 LPM (2) Flow Rate for Gaseous sampling – 2 LPM (3) Calorific Value in Kcal/kg (i) F.Oil-10264(ii)F.Gas -12077 (4) The Specification is computed based on the heat supplied by Gas & Liquid Fuels. N.D. - Not Detected.

**Authorized By -**

**Name : Sapana Amin** | **Designation : Lab Incharge**

NOTE:
1) Reports may be reproduced, if required, but only in full and only with written approval of the laboratory.
2) Re analysis of sample will be done, if requested within 7 days from the date of Reporting of sample if the samples are not consumed during analysis.
3) The results reported above relate to the sample identified under Sample Details.

----------END OF REPORT----------

# KADAM ENVIRONMENTAL CONSULTANTS

An ISO 9001-2015 Certified Company (MoEF Approved)

871/B/3, Near Himalaya Machinery, GIDC Makarpura, Vadodara-10.
Phone : (O) 0265 - 6131000, 6131001


## ENVIRONMENTAL MONITORING REPORT

### LABORATORY TEST REPORT - STACK

REPORT NO.: JUN23/016/21

### SAMPLE DETAILS

| | | | |
|---|---|---|---|
| 1. | Name & Address of Client: Bharat Petroleum Corporation Ltd. Bina Refinery, Village: Agasod, Bina - 470124, Dist: Sagar, Madhya Pradesh, India. | | |
| 2. | Sample ID: 2148088246-016JN23SE01 | 3. | Client Representative: Mr. Anil Medhe |
| 4. | Sample Date: 15.06.2023 | 5. | Sampling Location: CDU/VDU |
| 6. | Sampling Time: 10:40 hr | 7. | Sampling Duration: 46 Mins |
| 8. | Analysis commenced on: 26.06.2023 | 9. | Analysis Completed on: 28.06.2023 |
| 10. | Reporting Date: 15.07.2023 | 11. | Discipline: Chemical |
| 12. | Sample Collected By: Mr. Jitendra Sinha | 13. | Group: Atmospheric Pollution |
| 14. | Sampling Procedure: IS Method | 15. | Product: Stack Emission |
| 16. | Description of Sample: Sampling Bottles: Sealed √ | Thimble:Packed√ | Bladder : Clamped √ |
| 17. | Sample Received Date: 26.06.2023 | | |

### STACK DETAILS

| S.No. | Parameters | Unit (SI) | | Description |
|---|---|---|---|---|
| 1. | Source | | : | **CDU/VDU (Common Stack for Crude and Vacuum Heaters)** |
| 2. | Height | m | : | 100 (From Ground level) |
| 3. | Diameter | m | : | 4.45 |
| 4. | Temperature | °c | : | 287 |
| 5. | Velocity | m/s | : | 13.69 |
| 6. | Type of fuel used | | : | Fuel oil +Fuel Gas |
| 7. | Quantity of fuel used | Kg/hr | : | 725.58 (F.Oil) + 7122.36 (F.Gas) |
| 8. | Gas Flow rate | $Nm^3/hr.$ | : | 407977.5 |

| S.No. | Parameters | Unit | | Results | Specification/ SPCB Norms | Method Used |
|---|---|---|---|---|---|---|
| 1. | Vanadium | $mg/Nm^3$ | : | N.D. | 5 | APHA 23rd Edition 3500-V B |

Remark:(1) Flow Rate for PM – 21 LPM (2) Flow Rate for Gaseous sampling – 2 LPM (3) Calorific Value in Kcal/kg (i) F.Oil-10264(ii)F.Gas -12077 (4) The Specification is computed based on the heat supplied by Gas & Liquid Fuels. **N.D. - Not Detected.**

**Authorized By -**

**Name : Sapana Amin** | **Designation : Lab Incharge**

NOTE:
1) Reports may be reproduced, if required, but only in full and only with written approval of the laboratory.
2) Re analysis of sample will be done, if requested within 7 days from the date of Reporting of sample if the samples are not consumed during analysis.
3) The results reported above relate to the sample identified under Sample Details.

----------END OF REPORT----------

## LABORATORY TEST REPORT - STACK

**REPORT NO.: JUN23/016/05 (ULR- TC709923000013711F)**

### SAMPLE DETAILS

| | | | |
|---|---|---|---|
| 1. | Name & Address of Client: Bharat Petroleum Corporation Ltd.<br>Bina Refinery, Village: Agasod, Bina - 470124, Dist: Sagar, Madhya Pradesh, India. | | |
| 2. | Sample ID: 2148088245–016JN23SE05 | 3. | Client Representative: Mr. Anil Medhe |
| 4. | Sample Date: 05.06.2023 | 5. | Sampling Location: MS Block (Hot Oil Heater) |
| 6. | Sampling Time: 16:00 hr | 7. | Sampling Duration: 45 Mins |
| 8. | Analysis commenced on: 26.06.2023 | 9. | Analysis Completed on: 28.06.2023 |
| 10. | Reporting Date: 15.07.2023 | 11. | Discipline: Chemical |
| 12. | Sample Collected By: Mr. Jitendra Sinha | 13. | Group: Atmospheric Pollution |
| 14. | Sampling Procedure: IS Method | 15. | Product: Stack Emission |
| 16. | Description of Sample: Sampling Bottles: Sealed √ | Thimble:Packed√ | Bladder: Clamped √ |
| 17. | Sample Received Date: 26.06.2023 | | |

### STACK DETAILS

| S.No. | Parameters | Unit (SI) | | Description |
|---|---|---|---|---|
| 1. | Source | | : | **MS Block (Hot Oil Heater)** |
| 2. | Height | m | : | 60 (From Ground Level) |
| 3. | Diameter | m | : | 2.6 |
| 4. | Temperature | °c | : | 189 |
| 5. | Velocity | m/s | : | 12.51 |
| 6. | Type of fuel used | | : | Fuel Oil +Fuel Gas |
| 7. | Quantity of fuel used | Kg/hr | : | 250.2 (F.Oil) + 2114.19 (F.Gas) |
| 8. | Gas Flow rate | $Nm^3/hr.$ | : | 154270.6 |

| S.No. | Parameters | Unit | | Results | Specification/ SPCB Norms | Method Used |
|---|---|---|---|---|---|---|
| 1. | Particulate Matter | $mg/Nm^3$ | : | 8 | 9 | IS 11255 (Part 1) : 1985 |
| 2. | Sulphur Dioxide($SO_2$) | $mg/Nm^3$ | : | 40.87 | 123 | IS 11255 (Part 2) : 1985 |
| 3. | Oxides of Nitrogen (NOx) | $mg/Nm^3$ | : | 201.49 | 259 | IS 11255 (Part 7) : 2005 |
| 4. | CO | $mg/Nm^3$ | : | 9.09 | 105 | IS 11255 (Part 3): 2008 |
| 5. | Nickel | $mg/Nm^3$ | : | <0.0001 | 5 | USEPA(2000)-Method 29 |
| 6. | $H_2S$ | $mg/Nm^3$ | : | N.D. | N.A. | IS 11255 (Part-4): 2006 |

Remark:(1) Flow Rate for PM – 18 LPM (2) Flow Rate for Gaseous sampling – 2 LPM (3) Calorific Value in Kcal/kg (i) F.Oil – 10264(ii)F.Gas - 12077 (4) The Specification is computed based on the heat supplied by Gas & Liquid Fuels. N.D. - Not Detected.

**Authorized By -**

**Name : Sapana Amin** | **Designation : Lab Incharge**

NOTE: 1) Reports may be reproduced, if required, but only in full and only with written approval of the laboratory.
2) Re analysis of sample will be done, if requested within 7 days from the date of Reporting of sample if the samples are not consumed during analysis.
3) The results reported above relate to the sample identified under Sample Details.

----------END OF REPORT----------

# KADAM ENVIRONMENTAL CONSULTANTS

An ISO 9001-2015 Certified Company (MoEF Approved)

871/B/3, Near Himalaya Machinery, GIDC Makarpura, Vadodara-10.
Phone : (O) 0265 - 6131000, 6131001


## ENVIRONMENTAL MONITORING REPORT

### LABORATORY TEST REPORT - STACK

REPORT NO.: JUN23/016/25

### SAMPLE DETAILS

| | | | |
|---|---|---|---|
| 1. | Name & Address of Client: Bharat Petroleum Corporation Ltd. Bina Refinery, Village: Agasod, Bina - 470124, Dist: Sagar, Madhya Pradesh, India. | | |
| 2. | Sample ID: 2148088246-016JN23SE05 | 3. | Client Representative: Mr. Anil Medhe |
| 4. | Sample Date: 05.06.2023 | 5. | Sampling Location: MS Block (Hot Oil Heater) |
| 6. | Sampling Time: 16:00 hr | 7. | Sampling Duration: 45 Mins |
| 8. | Analysis commenced on: 26.06.2023 | 9. | Analysis Completed on: 28.06.2023 |
| 10. | Reporting Date: 15.07.2023 | 11. | Discipline: Chemical |
| 12. | Sample Collected By: Mr. Jitendra Sinha | 13. | Group: Atmospheric Pollution |
| 14. | Sampling Procedure: IS Method | 15. | Product: Stack Emission |
| 16. | Description of Sample: Sampling Bottles: Sealed √ | Thimble:Packed√ | Bladder: Clamped √ |
| 17. | Sample Received Date: 26.06.2023 | | |

### STACK DETAILS

| S.No. | Parameters | Unit (SI) | | Description |
|---|---|---|---|---|
| 1. | Source | | : | **MS Block (Hot oil Heater)** |
| 2. | Height | m | : | 60 (From Ground Level) |
| 3. | Diameter | m | : | 2.6 |
| 4. | Temperature | °c | : | 189 |
| 5. | Velocity | m/s | : | 12.51 |
| 6. | Type of fuel used | | : | Fuel oil +Fuel Gas |
| 7. | Quantity of fuel used | Kg/hr | : | 250.2 (F.Oil) + 2114.19 (F.Gas) |
| 8. | Gas Flow rate | $Nm^3$/hr. | : | 154270.6 |

| S.No. | Parameters | Unit | | Results | Specification/ SPCB Norms | Method Used |
|---|---|---|---|---|---|---|
| 1. | Vanadium | $mg/Nm^3$ | : | N.D. | 5 | APHA 23rd Edition 3500-V B |

Remark:(1) Flow Rate for PM – 18 LPM (2) Flow Rate for Gaseous sampling – 2 LPM (3) Calorific Value in Kcal/kg (i) F.Oil – 10264(ii)F.Gas - 12077 (4) The Specification is computed based on the heat supplied by Gas & Liquid Fuels. **N.D. - Not Detected.**

**Authorized By -**

**Name : Sapana Amin** **Designation : Lab Incharge**

NOTE:
1) Reports may be reproduced, if required, but only in full and only with written approval of the laboratory.
2) Re analysis of sample will be done, if requested within 7 days from the date of Reporting of sample if the samples are not consumed during analysis.
3) The results reported above relate to the sample identified under Sample Details.

----------END OF REPORT----------

## LABORATORY TEST REPORT - STACK

**REPORT NO.: JUN23/016/06 (ULR- TC709923000013712F)**

### SAMPLE DETAILS

| | | | |
|---|---|---|---|
| 1. | Name & Address of Client: Bharat Petroleum Corporation Ltd. Bina Refinery, Village: Agasod, Bina - 470124, Dist: Sagar, Madhya Pradesh, India. | | |
| 2. | Sample ID: 2148088246-016JN23SE06 | 3. | Client Representative: Mr. Anil Meche |
| 4. | Sample Date: 05.06.2023 | 5. | Sampling Location: MS Block (NHT-CCR Common Stack) |
| 6. | Sampling Time: 13:10 hr | 7. | Sampling Duration: 42 Mins |
| 8. | Analysis commenced on: 26.06.2023 | 9. | Analysis Completed on: 28.06.2023 |
| 10. | Reporting Date: 15.07.2023 | 11. | Discipline: Chemical |
| 12. | Sample Collected By: Mr. Jitendra Sinha | 13. | Group: Atmospheric Pollution |
| 14. | Sampling Procedure: IS Method | 15. | Product: Stack Emission |
| 16. | Description of Sample: Sampling Bottles: Sealed √ | Thimble:Packed√ | Bladder: Clamped √ |
| 17. | Sample Received Date: 26.06.2023 | | |

### STACK DETAILS

| S.No. | Parameters | Unit (SI) | | Description |
|---|---|---|---|---|
| 1. | Source | | : | **MS Block (NHT-CCR Common Stack)** |
| 2. | Height | m | : | 60 (from Ground Level) |
| 3. | Diameter | m | : | 3.2 |
| 4. | Temperature | °c | : | 262 |
| 5. | Velocity | m/s | : | 13.85 |
| 6. | Type of fuel used | | : | Fuel Oil +Fuel Gas |
| 7. | Quantity of fuel used | Kg/hr | : | 125.1 (F.Oil) + 4249.23 (F.Gas) |
| 8. | Gas Flow rate | $Nm^3/hr.$ | : | 223443.5 |

| S.No. | Parameters | Unit | | Results | Specification/ SPCB Norms | Method Used |
|---|---|---|---|---|---|---|
| 1. | Particulate Matter | $mg/Nm^3$ | : | 4 | 6 | IS 11255 (Part 1) : 1985 |
| 2. | Sulphur Dioxide($SO_2$) | $mg/Nm^3$ | : | 68.84 | 70 | IS 11255 (Part 2) : 1985 |
| 3. | Oxides of Nitrogen (NOx) | $mg/Nm^3$ | : | 164.79 | 252 | IS 11255 (Part 7) : 2005 |
| 4. | CO | $mg/Nm^3$ | : | 7.41 | 101 | IS 11255 (Part 3): 2008 |
| 5. | Nickel | $mg/Nm^3$ | : | <0.0001 | 5 | USEPA(2000)-Method 29 |
| 6. | $H_2S$ | $mg/Nm^3$ | : | N.D. | N.A. | IS 11255 (Part-4): 2006 |

Remark:(1) Flow Rate for PM – 21 LPM (2) Flow Rate for Gaseous sampling – 2 LPM (3) Calorific Value in Kcal/kg (i) F.Oil – 10264(ii)F.Gas - 12077 (4) The Specification is computed based on the heat supplied by Gas & Liquid Fuels. N.D. - Not Detected.

**Authorized By -**

**Name : Sapana Amin** **Designation : Lab Incharge**

NOTE: 1) Reports may be reproduced, if required, but only in full and only with written approval of the laboratory.
2) Re analysis of sample will be done, if requested within 7 days from the date of Reporting of sample if the samples are not consumed during analysis.
3) The results reported above relate to the sample identified under Sample Details.

----------END OF REPORT----------

# KADAM ENVIRONMENTAL CONSULTANTS

An ISO 9001-2015 Certified Company (MoEF Approved)

871/B/3, Near Himalaya Machinery, GIDC Makarpura, Vadodara-10.
Phone : (O) 0265 - 6131000, 6131001


## ENVIRONMENTAL MONITORING REPORT

### LABORATORY TEST REPORT - STACK

**REPORT NO.: JUN23/016/26**

### SAMPLE DETAILS

| | | | |
|---|---|---|---|
| 1. | Name & Address of Client: Bharat Petroleum Corporation Ltd. Bina Refinery, Village: Agasod, Bina - 470124, Dist: Sagar, Madhya Pradesh, India. | | |
| 2. | Sample ID: 2148088246–016JN23SE06 | 3. | Client Representative: Mr. Anil Medhe |
| 4. | Sample Date: 05.06.2023 | 5. | Sampling Location: MS Block (NHT-CCR Common Stack) |
| 6. | Sampling Time: 13:10 hr | 7. | Sampling Duration: 42 Mins |
| 8. | Analysis commenced on: 26.06.2023 | 9. | Analysis Completed on: 28.06.2023 |
| 10. | Reporting Date: 15.07.2023 | 11. | Discipline: Chemical |
| 12. | Sample Collected By: Mr. Jitendra Sinha | 13. | Group: Atmospheric Pollution |
| 14. | Sampling Procedure: IS Method | 15. | Product: Stack Emission |
| 16. | Description of Sample: Sampling Bottles: Sealed √ | Thimble:Packed√ | Bladder: Clamped √ |
| 17. | Sample Received Date: 26.06.2023 | | |

### STACK DETAILS

| S.No. | Parameters | Unit (SI) | | Description |
|---|---|---|---|---|
| 1. | Source | | : | **MS Block (NHT-CCR Common Stack)** |
| 2. | Height | m | : | 60 (from Ground Level) |
| 3. | Diameter | m | : | 3.2 |
| 4. | Temperature | °c | : | 262 |
| 5. | Velocity | m/s | : | 13.85 |
| 6. | Type of fuel used | | : | Fuel Oil +Fuel Gas |
| 7. | Quantity of fuel used | Kg/hr | : | 125.1 (F.Oil) + 4249.23 (F.Gas) |
| 8. | Gas Flow rate | $Nm^3/hr.$ | : | 223443.5 |

| S.No. | Parameters | Unit | | Results | Specification/ SPCB Norms | Method Used |
|---|---|---|---|---|---|---|
| 1. | Vanadium | $mg/Nm^3$ | : | N.D. | 5 | APHA 23rd Edition 3500-V B |

Remark:(1) Flow Rate for PM – 21 LPM (2) Flow Rate for Gaseous sampling – 2 LPM (3) Calorific Value in Kcal/kg (i) F.Oil – 10264(ii)F.Gas - 12077 (4) The Specification is computed based on the heat supplied by Gas & Liquid Fuels. **N.D. - Not Detected.**

**Authorized By -**

**Name : Sapana Amin** **Designation : Lab Incharge**

NOTE:
1) Reports may be reproduced, if required, but only in full and only with written approval of the laboratory.
2) Re analysis of sample will be done, if requested within 7 days from the date of Reporting of sample if the samples are not consumed during analysis.
3) The results reported above relate to the sample identified under Sample Details.

----------END OF REPORT----------

## LABORATORY TEST REPORT - STACK

**REPORT NO.: JUN23/016/08 (ULR- TC709923000013714F)**

### SAMPLE DETAILS

| | | | |
|---|---|---|---|
| 1. | Name & Address of Client: Bharat Petroleum Corporation Ltd.<br>Bina Refinery, Village: Agasod, Bina - 470124, Dist: Sagar, Madhya Pradesh, India. | | |
| 2. | Sample ID: 2148088246-016JN23SE08 | 3. | Client Representative: Mr. Anil Medhe |
| 4. | Sample Date: 05.06.2023 | 5. | Sampling Location: MS Block (CCR Auxiliary) 1 & 2 Inter Heater |
| 6. | Sampling Time: 12:05 hr | 7. | Sampling Duration: 48 Mins |
| 8. | Analysis commenced on: 26.06.2023 | 9. | Analysis Completed on: 28.06.2023 |
| 10. | Reporting Date: 15.07.2023 | 11. | Discipline: Chemical |
| 12. | Sample Collected By: Mr. Jitendra Sinha | 13. | Group: Atmospheric Pollution |
| 14. | Sampling Procedure: IS Method | 15. | Product: Stack Emission |
| 16. | Description of Sample: Sampling Bottles: Sealed √ | Thimble:Packed√ | Bladder: Clamped √ |
| 17. | Sample Received Date: 26.06.2023 | | |

### STACK DETAILS

| S.No. | Parameters | Unit (SI) | | Description |
|---|---|---|---|---|
| 1. | Source | | : | **MS Block (CCR Auxiliary) 1 & 2 Inter Heater** |
| 2. | Height | m | : | 65 |
| 3. | Diameter | m | : | 1.65 |
| 4. | Temperature | °c | : | 180 |
| 5. | Velocity | m/s | : | 12.09 |
| 6. | Type of fuel used | | : | Fuel Oil +Fuel Gas |
| 7. | Quantity of fuel used | Kg/hr | : | 454.53 (F.Oil) + 20.85 (F.Gas) |
| 8. | Gas Flow rate | $Nm^3/hr.$ | : | 61236.1 |

| S.No. | Parameters | Unit | | Results | Specification/ SPCB Norms | Method Used |
|---|---|---|---|---|---|---|
| 1. | Particulate Matter | $mg/Nm^3$ | : | 18 | 48 | IS 11255 (Part 1) : 1985 |
| 2. | Sulphur Dioxide($SO_2$) | $mg/Nm^3$ | : | 291.43 | 809 | IS 11255 (Part 2) : 1985 |
| 3. | Oxides of Nitrogen (NOx) | $mg/Nm^3$ | : | 19.76 | 345 | IS 11255 (Part 7) : 2005 |
| 4. | CO | $mg/Nm^3$ | : | 4.15 | 147 | IS 11255 (Part 3): 2008 |
| 5. | Nickel | $mg/Nm^3$ | : | <0.0001 | N.A. | USEPA(2000)-Method 29 |
| 6. | $H_2S$ | $mg/Nm^3$ | : | N.D. | N.A. | IS 11255 (Part-4): 2006 |

Remark:(1) Flow Rate for PM – 21 LPM (2) Flow Rate for Gaseous sampling – 2 LPM (3) Calorific Value in Kcal/kg (i) F.Oil – 10264(ii)F.Gas - 12077 (4) The Specification is computed based on the heat supplied by Gas & Liquid Fuels. N.D. - Not Detected.

**Authorized By -**

**Name : Sapana Amin** | **Designation : Lab Incharge**

NOTE: 1) Reports may be reproduced, if required, but only in full and only with written approval of the laboratory.
2) Re analysis of sample will be done, if requested within 7 days from the date of Reporting of sample if the samples are not consumed during analysis.
3) The results reported above relate to the sample identified under Sample Details.

----------END OF REPORT----------

## LABORATORY TEST REPORT - STACK

**REPORT NO.: JUN23/016/28**

### SAMPLE DETAILS

| | | | |
|---|---|---|---|
| 1. | Name & Address of Client: Bharat Petroleum Corporation Ltd. Bina Refinery, Village: Agasod, Bina - 470124, Dist: Sagar, Madhya Pradesh, India. | | |
| 2. | Sample ID: 2148088246-016JN23SE08 | 3. | Client Representative: Mr. Anil Medhe |
| 4. | Sample Date: 05.06.2023 | 5. | Sampling Location: MS Block (CCR Auxiliary) 1 & 2 Inter Heater |
| 6. | Sampling Time: 12:05 hr | 7. | Sampling Duration: 48 Mins |
| 8. | Analysis commenced on: 26.06.2023 | 9. | Analysis Completed on: 28.06.2023 |
| 10. | Reporting Date: 15.07.2023 | 11. | Discipline: Chemical |
| 12. | Sample Collected By: Mr. Jitendra Sinha | 13. | Group: Atmospheric Pollution |
| 14. | Sampling Procedure: IS Method | 15. | Product: Stack Emission |
| 16. | Description of Sample: Sampling Bottles: Sealed √ | Thimble:Packed√ | Bladder: Clamped √ |
| 17. | Sample Received Date: 26.06.2023 | | |

### STACK DETAILS

| S.No. | Parameters | Unit (SI) | | Description |
|---|---|---|---|---|
| 1. | Source | | : | **MS Block (CCR Auxilary) 1 & 2 Inter Heater** |
| 2. | Height | m | : | 65 |
| 3. | Diameter | m | : | 1.65 |
| 4. | Temperature | °c | : | 180 |
| 5. | Velocity | m/s | : | 12.09 |
| 6. | Type of fuel used | | : | Fuel Oil +Fuel Gas |
| 7. | Quantity of fuel used | Kg/hr | : | 454.53 (F.Oil) + 20.85 (F.Gas) |
| 8. | Gas Flow rate | $Nm^3$/hr. | : | 61236.1 |

| S.No. | Parameters | Unit | | Results | Specification/ SPCB Norms | Method Used |
|---|---|---|---|---|---|---|
| 1. | Vanadium | $mg/Nm^3$ | : | N.D. | 5 | APHA 23rd Edition 3500-V B |

Remark:(1) Flow Rate for PM – 21 LPM (2) Flow Rate for Gaseous sampling – 2 LPM (3) Calorific Value in Kcal/kg (i) F.Oil – 10264(ii)F.Gas - 12077 (4) The Specification is computed based on the heat supplied by Gas & Liquid Fuels. **N.D. - Not Detected.**

**Authorized By -**

**Name : Sapana Amin** | **Designation : Lab Incharge**

NOTE: 1) Reports may be reproduced, if required, but only in full and only with written approval of the laboratory.
2) Re analysis of sample will be done, if requested within 7 days from the date of Reporting of sample if the samples are not consumed during analysis.
3) The results reported above relate to the sample identified under Sample Details.

----------END OF REPORT----------

## LABORATORY TEST REPORT - STACK

**REPORT NO.: JUN23/016/07 (ULR- TC709923000013713F)**

### SAMPLE DETAILS

| | | | |
|---|---|---|---|
| 1. | Name & Address of Client: Bharat Petroleum Corporation Ltd. Bina Refinery, Village: Agasod, Bina - 470124, Dist: Sagar, Madhya Pradesh, India. | | |
| 2. | Sample ID: 2148088246-016JN23SE07 | 3. | Client Representative: Mr. Anil Medhe |
| 4. | Sample Date: 05.06.2023 | 5. | Sampling Location: MS Block (NHT Auxiliary) Heater |
| 6. | Sampling Time: 14:50 hr | 7. | Sampling Duration: 44 Mins |
| 8. | Analysis commenced on: 26.06.2023 | 9. | Analysis Completed on: 28.06.2023 |
| 10. | Reporting Date: 15.07.2023 | 11. | Discipline: Chemical |
| 12. | Sample Collected By: Mr. Jitendra Sinha | 13. | Group: Atmospheric Pollution |
| 14. | Sampling Procedure: IS Method | 15. | Product: Stack Emission |
| 16. | Description of Sample: Sampling Bottles: Sealed √ | Thimble:Packed√ | Bladder: Clamped √ |
| 17. | Sample Received Date: 26.06.2023 | | |

### STACK DETAILS

| S.No. | Parameters | Unit (SI) | | Description |
|---|---|---|---|---|
| 1. | Source | | : | **MS Block (NHT Auxiliary) Heater** |
| 2. | Height | m | : | 60 |
| 3. | Diameter | m | : | 1.75 |
| 4. | Temperature | °c | : | 218 |
| 5. | Velocity | m/s | : | 13.63 |
| 6. | Type of fuel used | | : | Fuel Oil +Fuel Gas |
| 7. | Quantity of fuel used | Kg/hr | : | 0.0 (F.Oil) + 537.93 (F.Gas) |
| 8. | Gas Flow rate | $Nm^3/hr$. | : | 71655.9 |

| S.No. | Parameters | Unit | | Results | Specification/ SPCB Norms | Method Used |
|---|---|---|---|---|---|---|
| 1. | Particulate Matter | $mg/Nm^3$ | : | 3 | 5 | IS 11255 (Part 1) : 1985 |
| 2. | Sulphur Dioxide($SO_2$) | $mg/Nm^3$ | : | 43.07 | 50 | IS 11255 (Part 2) : 1985 |
| 3. | Oxides of Nitrogen (NOx) | $mg/Nm^3$ | : | 181.11 | 250 | IS 11255 (Part 7) : 2005 |
| 4. | CO | $mg/Nm^3$ | : | 6.33 | 100 | IS 11255 (Part 3): 2008 |
| 5. | Nickel | $mg/Nm^3$ | : | <0.0001 | N.A. | USEPA(2000)-Method 29 |
| 6. | $H_2S$ | $mg/Nm^3$ | : | N.D. | N.A. | IS 11255 (Part-4): 2006 |

Remark:(1) Flow Rate for PM – 21 LPM (2) Flow Rate for Gaseous sampling – 2 LPM (3) Calorific Value in Kcal/kg (i) F.Oil – 10264(ii)F.Gas - 12077 (4) The Specification is computed based on the heat supplied by Gas & Liquid Fuels. N.D. - Not Detected.

**Authorized By -**

**Name : Sapana Amin** **Designation : Lab Incharge**

NOTE: 1) Reports may be reproduced, if required, but only in full and only with written approval of the laboratory.
2) Re analysis of sample will be done, if requested within 7 days from the date of Reporting of sample if the samples are not consumed during analysis.
3) The results reported above relate to the sample identified under Sample Details.

----------END OF REPORT----------

## LABORATORY TEST REPORT - STACK

REPORT NO.: JUN23/016/27

### SAMPLE DETAILS

| | | | |
|---|---|---|---|
| 1. | Name & Address of Client: Bharat Petroleum Corporation Ltd.<br>Bina Refinery, Village: Agasod, Bina - 470124, Dist: Sagar, Madhya Pradesh, India. | | |
| 2. | Sample ID: 2148088246-016JN23SE07 | 3. | Client Representative: Mr. Anil Medhe |
| 4. | Sample Date: 05.06.2023 | 5. | Sampling Location: MS Block (NHT Auxiliary) Heater |
| 6. | Sampling Time: 14:50 hr | 7. | Sampling Duration: 44 Mins |
| 8. | Analysis commenced on: 26.06.2023 | 9. | Analysis Completed on: 28.06.2023 |
| 10. | Reporting Date: 15.07.2023 | 11. | Discipline: Chemical |
| 12. | Sample Collected By: Mr. Jitendra Sinha | 13. | Group: Atmospheric Pollution |
| 14. | Sampling Procedure: IS Method | 15. | Product: Stack Emission |
| 16. | Description of Sample: | Sampling Bottles: Sealed √ | Thimble:Packed√ Bladder: Clamped √ |
| 17. | Sample Received Date: 26.06.2023 | | |

### STACK DETAILS

| S.No. | Parameters | Unit (SI) | | Description |
|---|---|---|---|---|
| 1. | Source | | : | **MS Block (NHT Auxilary) Heater** |
| 2. | Height | m | : | 60 |
| 3. | Diameter | m | : | 1.75 |
| 4. | Temperature | °c | : | 218 |
| 5. | Velocity | m/s | : | 13.63 |
| 6. | Type of fuel used | | : | Fuel Oil +Fuel Gas |
| 7. | Quantity of fuel used | Kg/hr | : | 0.0 (F.Oil) + 537.93 (F.Gas) |
| 8. | Gas Flow rate | $Nm^3/hr.$ | : | 71655.9 |

| S.No. | Parameters | Unit | | Results | Specification/ SPCB Norms | Method Used |
|---|---|---|---|---|---|---|
| 1. | Vanadium | $mg/Nm^3$ | : | N.D. | 5 | APHA 23rd Edition 3500-V B |

Remark:(1) Flow Rate for PM – 21 LPM (2) Flow Rate for Gaseous sampling – 2 LPM (3) Calorific Value in Kcal/kg (i) F.Oil – 10264(ii)F.Gas : 12077 (4) The Specification is computed based on the heat supplied by Gas & Liquid Fuels. **N.D. - Not Detected.**

**Authorized By -**

**Name : Sapana Amin** **Designation : Lab Incharge**

NOTE: 1) Reports may be reproduced, if required, but only in full and only with written approval of the laboratory.
2) Re analysis of sample will be done, if requested within 7 days from the date of Reporting of sample if the samples are not consumed during analysis.
3) The results reported above relate to the sample identified under Sample Details.

----------**END OF REPORT**----------

## LABORATORY TEST REPORT - STACK

**REPORT NO.: JUN23/016/04 (ULR- TC709923000013710F)**

### SAMPLE DETAILS

| | | | |
|---|---|---|---|
| 1. | Name & Address of Client: Bharat Petroleum Corporation Ltd.<br>Bina Refinery, Village: Agasod, Bina - 470124, Dist: Sagar, Madhya Pradesh, India. | | |
| 2. | Sample ID: 2148088246-016JN23SE04 | 3. | Client Representative: Mr. Anil Medhe |
| 4. | Sample Date: 15.06.2023 | 5. | Sampling Location: HCU |
| 6. | Sampling Time: 11:50 hr | 7. | Sampling Duration: 44 Mins |
| 8. | Analysis commenced on: 26.06.2023 | 9. | Analysis Completed on: 28.06.2023 |
| 10. | Reporting Date: 15.07.2023 | 11. | Discipline: Chemical |
| 12. | Sample Collected By: Mr. Jitendra Sinha | 13. | Group: Atmospheric Pollution |
| 14. | Sampling Procedure: IS Method | 15. | Product: Stack Emission |
| 16. | Description of Sample: Sampling Bottles: Sealed √ | Thimble:Packed√ | Bladder: Clamped √ |
| 17. | Sample Received Date: 26.06.2023 | | |

### STACK DETAILS

| S.No. | Parameters | Unit (SI) | | Description |
|---|---|---|---|---|
| 1. | Source | | : | **HCU (Common Stack)** |
| 2. | Height | m | : | 100 (From Ground Level) |
| 3. | Diameter | m | : | 2.34 |
| 4. | Temperature | °c | : | 232 |
| 5. | Velocity | m/s | : | 13.38 |
| 6. | Type of fuel used | | : | Fuel Oil +Fuel Gas |
| 7. | Quantity of fuel used | Kg/hr | : | 175.14 (F.Oil) + 5129.1 (F.Gas) |
| 8. | Gas Flow rate | $Nm^3/hr$. | : | 122285.9 |

| S.No. | Parameters | Unit | | Results | Specification/ SPCB Norms | Method Used |
|---|---|---|---|---|---|---|
| 1. | Particulate Matter | $mg/Nm^3$ | : | 3 | 6 | IS 11255 (Part 1) : 1985 |
| 2. | Sulphur Dioxide($SO_2$) | $mg/Nm^3$ | : | 66.45 | 73 | IS 11255 (Part 2) : 1985 |
| 3. | Oxides of Nitrogen (NOx) | $mg/Nm^3$ | : | 161.98 | 253 | IS 11255 (Part 7) : 2005 |
| 4. | CO | $mg/Nm^3$ | : | 11.32 | 101 | IS 11255 (Part 3): 2008 |
| 5. | Nickel | $mg/Nm^3$ | : | <0.0001 | 5 | USEPA(2000)-Method 29 |
| 6. | $H_2S$ | $mg/Nm^3$ | : | N.D. | N.A. | IS 11255 (Part-4): 2006 |

Remark:(1) Flow Rate for PM – 20 LPM (2) Flow Rate for Gaseous sampling – 2 LPM (3) Calorific Value in Kcal/kg (i) F.Oil – 10264(ii)F.Gas - 12077 (4) The Specification is computed based on the heat supplied by Gas & Liquid Fuels. N.D. - Not Detected.

**Authorized By**

**Name : Sapana Amin** | **Designation : Lab Incharge**

NOTE:
1) Reports may be reproduced, if required, but only in full and only with written approval of the laboratory.
2) Re analysis of sample will be done, if requested within 7 days from the date of Reporting of sample if the samples are not consumed during analysis.
3) The results reported above relate to the sample identified under Sample Details.

----------END OF REPORT----------

# KADAM ENVIRONMENTAL CONSULTANTS

An ISO 9001-2015 Certified Company (MoEF Approved)

871/B/3, Near Himalaya Machinery, GIDC Makarpura, Vadodara-10.
Phone : (O) 0265 - 6131000, 6131001


## ENVIRONMENTAL MONITORING REPORT

### LABORATORY TEST REPORT - STACK

REPORT NO.: JUN23/016/24

### SAMPLE DETAILS

| | | | |
|---|---|---|---|
| 1. | Name & Address of Client: Bharat Petroleum Corporation Ltd. Bina Refinery, Village: Agasod, Bina - 470124, Dist: Sagar, Madhya Pradesh, India. | | |
| 2. | Sample ID: 2148088246–016JN23SE04 | 3. | Client Representative: Mr. Anil Medhe |
| 4. | Sample Date: 15.06.2023 | 5. | Sampling Location: HCU |
| 6. | Sampling Time: 11:50 hr | 7. | Sampling Duration: 44 Mins |
| 8. | Analysis commenced on: 26.06.2023 | 9. | Analysis Completed on: 28.06.2023 |
| 10. | Reporting Date: 15.07.2023 | 11. | Discipline: Chemical |
| 12. | Sample Collected By: Mr. Jitendra Sinha | 13. | Group: Atmospheric Pollution |
| 14. | Sampling Procedure: IS Method | 15. | Product: Stack Emission |
| 16. | Description of Sample: Sampling Bottles: Sealed √ | Thimble:Packed√ | Bladder: Clamped √ |
| 17. | Sample Received Date: 26.06.2023 | | |

### STACK DETAILS

| S.No. | Parameters | Unit (SI) | | Description |
|---|---|---|---|---|
| 1. | Source | | : | **HCU (Common Stack)** |
| 2. | Height | m | : | 100 (From Ground Level) |
| 3. | Diameter | m | : | 2.34 |
| 4. | Temperature | °c | : | 232 |
| 5. | Velocity | m/s | : | 13.38 |
| 6. | Type of fuel used | | : | Fuel Oil +Fuel Gas |
| 7. | Quantity of fuel used | Kg/hr | : | 175.14 (F.Oil) + 5129.1 (F.Gas) |
| 8. | Gas Flow rate | $Nm^3/hr.$ | : | 122285.9 |

| S.No. | Parameters | Unit | | Results | Specification/ SPCB Norms | Method Used |
|---|---|---|---|---|---|---|
| 1. | Vanadium | $mg/Nm^3$ | : | N.D. | 5 | APHA 23rd Edition 3500-V B |

Remark:(1) Flow Rate for PM – 20 LPM (2) Flow Rate for Gaseous sampling – 2 LPM (3) Calorific Value in Kcal/kg (i) F.Oil – 10264(ii)F.Gas - 12077 (4) The Specification is computed based on the heat supplied by Gas & Liquid Fuels. **N.D. - Not Detected.**

**Authorized By -**

**Name : Sapana Amin** | **Designation : Lab Incharge**

NOTE:
1) Reports may be reproduced, if required, but only in full and only with written approval of the laboratory.
2) Re analysis of sample will be done, if requested within 7 days from the date of Reporting of sample if the samples are not consumed during analysis.
3) The results reported above relate to the sample identified under Sample Details.

----------END OF REPORT----------

## LABORATORY TEST REPORT - STACK

**REPORT NO.: JUN23/016/03 (ULR- TC709923000013709F)**

### SAMPLE DETAILS

| | | | |
|---|---|---|---|
| 1. | Name & Address of Client: Bharat Petroleum Corporation Ltd.<br>Bina Refinery, Village: Agasod, Bina - 470124, Dist: Sagar, Madhya Pradesh, India. | | |
| 2. | Sample ID: 2148088246-016JN23SE03 | 3. | Client Representative: Mr. Anil Medhe |
| 4. | Sample Date: 08.06.2023 | 5. | Sampling Location: HGU |
| 6. | Sampling Time: 12:10 hr | 7. | Sampling Duration: 50 mins |
| 8. | Analysis commenced on: 26.06.2023 | 9. | Analysis Completed on: 28.06.2023 |
| 10. | Reporting Date: 15.07.2023 | 11. | Discipline: Chemical |
| 12. | Sample Collected By: Mr. Jitendra Sinha | 13. | Group: Atmospheric Pollution |
| 14. | Sampling Procedure: IS Method | 15. | Product: Stack Emission |
| 16. | Description of Sample: | Sampling Bottles: Sealed √ | Thimble:Packed√ / Bladder: Clamped √ |
| 17. | Sample Received Date: 26.06.2023 | | |

### STACK DETAILS

| S.No. | Parameters | Unit (SI) | | Description |
|---|---|---|---|---|
| 1. | Source | | : | **HGU** |
| 2. | Height | m | : | 70 (From Ground Level) |
| 3. | Diameter | m | : | 3.1 |
| 4. | Temperature | °c | : | 174 |
| 5. | Velocity | m/s | : | 11.79 |
| 6. | Type of fuel used | | : | Naphtha + Purge Gas |
| 7. | Quantity of fuel used | Kg/hr | : | 7839.6 (N) + 18539.82 (P.Gas) |
| 8. | Gas Flow rate | $Nm^3/hr.$ | : | 213642.2 |

| S.No. | Parameters | Unit | | Results | Specification/ SPCB Norms | Method Used |
|---|---|---|---|---|---|---|
| 1. | Particulate Matter | $mg/Nm^3$ | : | 19 | 42 | IS 11255 (Part 1) : 1985 |
| 2. | Sulphur Dioxide($SO_2$) | $mg/Nm^3$ | : | 69.02 | 715 | IS 11255 (Part 2) : 1985 |
| 3. | Oxides of Nitrogen (NOx) | $mg/Nm^3$ | : | 252.34 | 333 | IS 11255 (Part 7) : 2005 |
| 4. | CO | $mg/Nm^3$ | : | 3.29 | 142 | IS 11255 (Part 3): 2008 |
| 5. | Nickel | $mg/Nm^3$ | : | <0.0001 | 5 | USEPA(2000)-Method 29 |
| 6. | $H_2S$ | $mg/Nm^3$ | : | N.D. | N.A. | IS 11255 (Part-4): 2006 |

Remark:(1) Flow Rate for PM – 25 LPM (2) Flow Rate for Gaseous sampling – 2 LPM (3) Calorific Value in Kcal/kg (i) Naptha –10647 (ii)P.Gas -1290 (4) The Specification is computed based on the heat supplied by Gas & Liquid Fuels. N.D. - Not Detected.

**Authorized By -**

**Name : Sapana Amin** | **Designation : Lab Incharge**

NOTE:
1) Reports may be reproduced, if required, but only in full and only with written approval of the laboratory.
2) Re analysis of sample will be done, if requested within 7 days from the date of Reporting of sample if the samples are not consumed during analysis.
3) The results reported above relate to the sample identified under Sample Details.

----------END OF REPORT----------

# KADAM ENVIRONMENTAL CONSULTANTS

An ISO 9001-2015 Certified Company (MoEF Approved)

871/B/3, Near Himalaya Machinery, GIDC Makarpura, Vadodara-10.
Phone : (O) 0265 - 6131000, 6131001


## ENVIRONMENTAL MONITORING REPORT

### LABORATORY TEST REPORT - STACK

REPORT NO.: JUN23/016/23

### SAMPLE DETAILS

| | | | |
|---|---|---|---|
| 1. | Name & Address of Client: Bharat Petroleum Corporation Ltd.<br>Bina Refinery, Village: Agasod, Bina - 470124, Dist: Sagar, Madhya Pradesh, India. | | |
| 2. | Sample ID: 2148088246-016JN23SE03 | 3. | Client Representative: Mr. Anil Medhe |
| 4. | Sample Date: 08.06.2023 | 5. | Sampling Location: HGU |
| 6. | Sampling Time: 12:10 hr | 7. | Sampling Duration: 50 mins |
| 8. | Analysis commenced on: 26.06.2023 | 9. | Analysis Completed on: 28.06.2023 |
| 10. | Reporting Date: 15.07.2023 | 11. | Discipline: Chemical |
| 12. | Sample Collected By: Mr. Jitendra Sinha | 13. | Group: Atmospheric Pollution |
| 14. | Sampling Procedure: IS Method | 15. | Product: Stack Emission |
| 16. | Description of Sample: Sampling Bottles: Sealed √ | Thimble:Packed√ | Bladder: Clamped √ |
| 17. | Sample Received Date: 26.06.2023 | | |

### STACK DETAILS

| S.No. | Parameters | Unit (SI) | | Description |
|---|---|---|---|---|
| 1. | Source | | : | **HGU** |
| 2. | Height | m | : | 70 (From Ground Level) |
| 3. | Diameter | m | : | 3.1 |
| 4. | Temperature | °c | : | 174 |
| 5. | Velocity | m/s | : | 11.79 |
| 6. | Type of fuel used | | : | Naptha + Purge Gas |
| 7. | Quantity of fuel used | Kg/hr | : | 7839.6 (N) + 18539.82 (P.Gas) |
| 8. | Gas Flow rate | $Nm^3/hr.$ | : | 213642.2 |

| S.No. | Parameters | Unit | | Results | Specification/ SPCB Norms | Method Used |
|---|---|---|---|---|---|---|
| 1. | Vanadium | $mg/Nm^3$ | : | N.D. | 5 | APHA 23rd Edition 3500-V B |

Remark:(1) Flow Rate for PM – 25 LPM (2) Flow Rate for Gaseous sampling – 2 LPM (3) Calorific Value in Kcal/kg (i) Naptha –10647 (ii)P.Gas -1290 (4) The Specification is computed based on the heat supplied by Gas & Liquid Fuels. **N.D. - Not Detected.**

**Authorized By -**

**Name : Sapana Amin** | **Designation : Lab Incharge**

NOTE:
1) Reports may be reproduced, if required, but only in full and only with written approval of the laboratory.
2) Re analysis of sample will be done, if requested within 7 days from the date of Reporting of sample if the samples are not consumed during analysis.
3) The results reported above relate to the sample identified under Sample Details.

----------END OF REPORT----------

## LABORATORY TEST REPORT - STACK

REPORT NO.: JUN23/016/02 (ULR- TC709923000013708F)

### SAMPLE DETAILS

| | | | |
|---|---|---|---|
| 1. | Name & Address of Client: Bharat Petroleum Corporation Ltd. Bina Refinery, Village: Agasod, Bina - 470124, Dist: Sagar, Madhya Pradesh, India. | | |
| 2. | Sample ID: 2148088246–016JN23SE02 | 3. | Client Representative: Mr. Anil Medhe |
| 4. | Sample Date: 05.06.2023 | 5. | Sampling Location: DCU |
| 6. | Sampling Time: 14:50 hr | 7. | Sampling Duration: 48 Mins |
| 8. | Analysis commenced on: 26.06.2023 | 9. | Analysis Completed on: 28.06.2023 |
| 10. | Reporting Date: 15.07.2023 | 11. | Discipline: Chemical |
| 12. | Sample Collected By: Mr. Jitendra Sinha | 13. | Group: Atmospheric Pollution |
| 14. | Sampling Procedure: IS Method | 15. | Product: Stack Emission |
| 16. | Description of Sample: Sampling Bottles: Sealed √ | Thimble:Packed√ | Bladder: Clamped √ |
| 17. | Sample Received Date: 26.06.2023 | | |

### STACK DETAILS

| S.No. | Parameters | Unit (SI) | | Description |
|---|---|---|---|---|
| 1. | Source | | : | **DCU (Common Stack for Coker Feed Heaters A&B)** |
| 2. | Height | m | : | 60 (From Ground level) |
| 3. | Diameter | m | : | 2.18 |
| 4. | Temperature | °c | : | 183 |
| 5. | Velocity | m/s | : | 12.43 |
| 6. | Type of fuel used | | : | Fuel Oil +Fuel Gas |
| 7. | Quantity of fuel used | Kg/hr | : | 0.0 (F.Oil) + 3284.292 (F.Gas) |
| 8. | Gas Flow rate | $Nm^3/hr.$ | : | 109181.5 |

| S.No. | Parameters | Unit | | Results | Specification/ SPCB Norms | Method Used |
|---|---|---|---|---|---|---|
| 1. | Particulate Matter | $mg/Nm^3$ | : | 4 | 5 | IS 11255 (Part 1) : 1985 |
| 2. | Sulphur Dioxide($SO_2$) | $mg/Nm^3$ | : | 42.17 | 50 | IS 11255 (Part 2) : 1985 |
| 3. | Oxides of Nitrogen (NOx) | $mg/Nm^3$ | : | 177.42 | 250 | IS 11255 (Part 7) : 2005 |
| 4. | CO | $mg/Nm^3$ | : | 4.13 | 100 | IS 11255 (Part 3): 2008 |
| 5. | Nickel | $mg/Nm^3$ | : | <0.0001 | 5 | USEPA(2000)-Method 29 |
| 6. | $H_2S$ | $mg/Nm^3$ | : | N.D. | N.A. | IS 11255 (Part-4): 2006 |

Remark:(1) Flow Rate for PM – 20 LPM (2) Flow Rate for Gaseous sampling – 2 LPM (3) Calorific Value in Kcal/kg (i) F.Oil – 10264(ii)F.Gas - 12077 (4) The Specification is converted based on the heat supplied by Gas & Liquid Fuels. N.D. - Not Detected.

**Authorized By -**

**Name : Sapana Amin** | **Designation : Lab Incharge**

NOTE:
1) Reports may be reproduced, if required, but only in full and only with written approval of the laboratory.
2) Re analysis of sample will be done, if requested within 7 days from the date of Reporting of sample if the samples are not consumed during analysis.
3) The results reported above relate to the sample identified under Sample Details.

----------END OF REPORT----------

## LABORATORY TEST REPORT - STACK

**REPORT NO.: JUN23/016/22**

### SAMPLE DETAILS

| | | | |
|---|---|---|---|
| 1. | Name & Address of Client: Bharat Petroleum Corporation Ltd. Bina Refinery, Village: Agasod, Bina - 470124, Dist: Sagar, Madhya Pradesh, India. | | |
| 2. | Sample ID: 2148088246-016JN23SE02 | 3. | Client Representative: Mr. Anil Medhe |
| 4. | Sample Date: 05.06.2023 | 5. | Sampling Location: DCU |
| 6. | Sampling Time: 14:50 hr | 7. | Sampling Duration: 48 Mins |
| 8. | Analysis commenced on: 26.06.2023 | 9. | Analysis Completed on: 28.06.2023 |
| 10. | Reporting Date: 15.07.2023 | 11. | Discipline: Chemical |
| 12. | Sample Collected By: Mr. Jitendra Sinha | 13. | Group: Atmospheric Pollution |
| 14. | Sampling Procedure: IS Method | 15. | Product: Stack Emission |
| 16. | Description of Sample: Sampling Bottles: Sealed √ | Thimble:Packed√ | Bladder: Clamped √ |
| 17. | Sample Received Date: 26.06.2023 | | |

### STACK DETAILS

| S.No. | Parameters | Unit (SI) | | Description |
|---|---|---|---|---|
| 1. | Source | | : | **DCU (Common Stack for Coker Feed Heaters A&B)** |
| 2. | Height | m | : | 60 (From Ground level) |
| 3. | Diameter | m | : | 2.18 |
| 4. | Temperature | °c | : | 183 |
| 5. | Velocity | m/s | : | 12.43 |
| 6. | Type of fuel used | | : | Fuel Oil +Fuel Gas |
| 7. | Quantity of fuel used | Kg/hr | : | 0.0 (F.Oil) + 3284.292 (F.Gas) |
| 8. | Gas Flow rate | $Nm^3/hr$. | : | 109181.5 |

| S.No. | Parameters | Unit | | Results | Specification/ SPCB Norms | Method Used |
|---|---|---|---|---|---|---|
| 1. | Vanadium | $mg/Nm^3$ | : | N.D. | 5 | APHA 23rd Edition 3500-V B |

Remark:(1) Flow Rate for PM – 20 LPM (2) Flow Rate for Gaseous sampling – 2 LPM (3) Calorific Value in Kcal/kg (i) F.Oil – 10264(ii)F.Gas - 12077 (4) The Specification is computed based on the heat supplied by Gas & Liquid Fuels. **N.D. - Not Detected.**

**Authorized By -**

**Name : Sapana Amin** **Designation : Lab Incharge**

NOTE:
1) Reports may be reproduced, if required, but only in full and only with written approval of the laboratory.
2) Re analysis of sample will be done, if requested within 7 days from the date of Reporting of sample if the samples are not consumed during analysis.
3) The results reported above relate to the sample identified under Sample Details.

----------END OF REPORT----------

## LABORATORY TEST REPORT - STACK

REPORT NO.: JUN23/016/10 (ULR- TC709923000013716F)

### SAMPLE DETAILS

| | | | |
|---|---|---|---|
| 1. | Name & Address of Client: Bharat Petroleum Corporation Ltd.<br>Bina Refinery, Village: Agasod, Bina - 470124, Dist: Sagar, Madhya Pradesh, India. | | |
| 2. | Sample ID: 2148088246–016JN23SE10 | 3. | Client Representative: Mr. Anil Medhe |
| 4. | Sample Date: 06.06.2023 | 5. | Sampling Location: CPP Boiler - I |
| 6. | Sampling Time: 11:40 hr | 7. | Sampling Duration: 35 Mins |
| 8. | Analysis commenced on: 26.06.2023 | 9. | Analysis Completed on: 28.06.2023 |
| 10. | Reporting Date: 15.07.2023 | 11. | Discipline: Chemical |
| 12. | Sample Collected By: Mr. Jitendra Sinha | 13. | Group: Atmospheric Pollution |
| 14. | Sampling Procedure: IS Method | 15. | Product: Stack Emission |
| 16. | Description of Sample: Sampling Bottles: Sealed √ | Thimble:Packed√ | Bladder: Clamped √ |
| 17. | Sample Received Date: 26.06.2023 | | |

### STACK DETAILS

| S.No. | Parameters | Unit (SI) | | Description |
|---|---|---|---|---|
| 1. | Source | | : | **CPP Boiler - I** |
| 2. | Height | m | : | 100 |
| 3. | Diameter | m | : | 3.87 |
| 4. | Temperature | °c | : | 160 |
| 5. | Velocity | m/s | : | 17.03 |
| 6. | Type of fuel used | | : | Pet Coke + Coal |
| 7. | Quantity of fuel used | Kg/hr | : | 328 (Pet Coke) + 0.0 (Coal) |
| 8. | Gas Flow rate | $Nm^3/hr.$ | : | 496841.3 |

| S.No. | Parameters | Unit | | Results | Specification/ SPCB Norms | Method Used |
|---|---|---|---|---|---|---|
| 1. | Particulate Matter | $mg/Nm^3$ | : | 18 | 50 | IS 11255 (Part 1) : 1985 |
| 2. | Sulphur Dioxide($SO_2$) | $mg/Nm^3$ | : | 393.96 | 600 | IS 11255 (Part 2) : 1985 |
| 3. | Oxides of Nitrogen (NOx) | $mg/Nm^3$ | : | 426.02 | 450 | IS 11255 (Part 7) : 2005 |
| 4. | CO | $mg/Nm^3$ | : | 20.82 | N.A. | IS 11255 (Part 3): 2008 |

**Remark: (1) Flow Rate for PM – 21 LPM (2) Flow Rate for Gaseous sampling – 2 LPM.**

**Authorized By -**

**Name : Sapana Amin** | **Designation : Lab Incharge**

NOTE:
1) Reports may be reproduced, if required, but only in full and only with written approval of the laboratory.
2) Re analysis of sample will be done, if requested within 7 days from the date of Reporting of sample if the samples are not consumed during analysis.
3) The results reported above relate to the sample identified under Sample Details.

----------END OF REPORT----------

## LABORATORY TEST REPORT - STACK

**REPORT NO.: JUN23/016/30**

### SAMPLE DETAILS

| | | | |
|---|---|---|---|
| 1. | Name & Address of Client: Bharat Petroleum Corporation Ltd. Bina Refinery, Village: Agasod, Bina - 470124, Dist: Sagar, Madhya Pradesh, India. | | |
| 2. | Sample ID: 2148088246-016JN23SE10 | 3. | Client Representative: Mr. Anil Medhe |
| 4. | Sample Date: 06.06.2023 | 5. | Sampling Location: CPP Boiler - I |
| 6. | Sampling Time: 11:40 hr | 7. | Sampling Duration: 35 Mins |
| 8. | Analysis commenced on: 26.06.2023 | 9. | Analysis Completed on: 28.06.2023 |
| 10. | Reporting Date: 15.07.2023 | 11. | Discipline: Chemical |
| 12. | Sample Collected By: Mr. Jitendra Sinha | 13. | Group: Atmospheric Pollution |
| 14. | Sampling Procedure: IS Method | 15. | Product: Stack Emission |
| 16. | Description of Sample: Sampling Bottles: Sealed √ | Thimble:Packed√ | Bladder: Clamped √ |
| 17. | Sample Received Date: 26.06.2023 | | |

### STACK DETAILS

| S.No. | Parameters | Unit (SI) | | Description |
|---|---|---|---|---|
| 1. | Source | | : | **CPP Boiler - I** |
| 2. | Height | m | : | 100 |
| 3. | Diameter | m | : | 3.87 |
| 4. | Temperature | °c | : | 160 |
| 5. | Velocity | m/s | : | 17.03 |
| 6. | Type of fuel used | | : | Pet Coke + Coal |
| 7. | Quantity of fuel used | Kg/hr | : | 328 (Pet Coke) + 0.0 (Coal) |
| 8. | Gas Flow rate | $Nm^3/hr.$ | : | 496841.3 |

| S.No. | Parameters | Unit | | Results | Specification/ SPCB Norms | Method Used |
|---|---|---|---|---|---|---|
| 1. | Mercury | $mg/Nm^3$ | : | <0.02 | 0.03 | APHA 23rd Edition 3112-B |

**Remark: (1) Flow Rate for PM – 21 LPM (2) Flow Rate for Gaseous sampling – 2 LPM.**

**Authorized By -**

**Name : Sapana Amin** | **Designation : Lab Incharge**

NOTE:
1) Reports may be reproduced, if required, but only in full and only with written approval of the laboratory.
2) Re analysis of sample will be done, if requested within 7 days from the date of Reporting of sample if the samples are not consumed during analysis.
3) The results reported above relate to the sample identified under Sample Details.

----------END OF REPORT----------

# KADAM ENVIRONMENTAL CONSULTANTS

An ISO 9001-2015 Certified Company (MoEF Approved)

871/B/3, Near Himalaya Machinery, GIDC Makarpura, Vadodara-10.
Phone : (O) 0265 - 6131000, 6131001


**ENVIRONMENTAL MONITORING REPORT**

## LABORATORY TEST REPORT - STACK

**REPORT NO.: JUN23/016/34**

### SAMPLE DETAILS

| | | | |
|---|---|---|---|
| 1. | Name & Address of Client: Bharat Petroleum Corporation Ltd. Bina Refinery, Village: Agasod, Bina - 470124, Dist.: Sagar, Madhya Pradesh, India. | | |
| 2. | Sample ID: 2148088246-016JN23SE20 | 3. | Client Representative: Mr. Anil Medhe |
| 4. | Sample Date: 06.06.2023 | 5. | Sampling Location: CPP Boiler - II |
| 6. | Sampling Time: - | 7. | Sampling Duration: - |
| 8. | Analysis commenced on: - | 9. | Analysis Completed on: - |
| 10. | Reporting Date: 15.07.2023 | 11. | Discipline: Chemical |
| 12. | Sample Collected By: Mr. Jitendra Sinha | 13. | Group: Atmospheric Pollution |
| 14. | Sampling Procedure: IS Method | 15. | Product: Stack Emission |
| 16. | Description of Sample: Sampling Bottles: Sealed √ | Thimble:Packed√ | Bladder: Clamped √ |
| 17. | Sample Received Date: - | | |

### STACK DETAILS

| S.No. | Parameters | Unit (SI) | | Description |
|---|---|---|---|---|
| 1. | Source | | : | **CPP Boiler - II** |
| 2. | Height | m | : | 100 |
| 3. | Diameter | m | : | 3.87 |
| 4. | Temperature | °c | : | - |
| 5. | Velocity | m/s | : | - |
| 6. | Type of fuel used | | : | Pet Coke + Coal |
| 7. | Quantity of fuel used | Kg/hr | : | - |
| 8. | Gas Flow rate | $Nm^3/hr.$ | : | - |

| S.No. | Parameters | Unit | | Results | Specification/ SPCB Norms | Method Used |
|---|---|---|---|---|---|---|
| 1. | Mercury | $mg/Nm^3$ | : | - | 0.03 | APHA 23rd Edition 3112-B |

**Remark: Boiler was under Shutdown during the sampling period.**

**Authorized By -**

**Name : Sapana Amin** | **Designation : Lab Incharge**

NOTE:
1) Reports may be reproduced, if required, but only in full and only with written approval of the laboratory.
2) Re analysis of sample will be done, if requested within 7 days from the date of Reporting of sample if the samples are not consumed during analysis.
3) The results reported above relate to the sample identified under Sample Details.

----------END OF REPORT----------

## LABORATORY TEST REPORT - STACK

REPORT NO.: JUN23/016/20 (ULR- TC709923000013726F)

### SAMPLE DETAILS

| | | | |
|---|---|---|---|
| 1. | Name & Address of Client: Bharat Petroleum Corporation Ltd. Bina Refinery, Village: Agasod, Bina - 470124, Dist: Sagar, Madhya Pradesh, India. | | |
| 2. | Sample ID: 2148088246-016JN235E20 | 3. | Client Representative: Mr. Anil Medhe |
| 4. | Sample Date: 06.06.2023 | 5. | Sampling Location: CPP Boiler - II |
| 6. | Sampling Time: - | 7. | Sampling Duration: - |
| 8. | Analysis commenced on: - | 9. | Analysis Completed on: - |
| 10. | Reporting Date: 15.07.2023 | 11. | Discipline: Chemical |
| 12. | Sample Collected By: Mr. Jitendra Sinha | 13. | Group: Atmospheric Pollution |
| 14. | Sampling Procedure: IS Method | 15. | Product: Stack Emission |
| 16. | Description of Sample: Sampling Bottles: Sealed √ | Thimble:Packed√ | Bladder: Clamped √ |
| 17. | Sample Received Date: - | | |

### STACK DETAILS

| S.No. | Parameters | Unit (SI) | | Description |
|---|---|---|---|---|
| 1. | Source | | : | **CPP Boiler - II** |
| 2. | Height | m | : | 100 |
| 3. | Diameter | m | : | 3.87 |
| 4. | Temperature | °c | : | - |
| 5. | Velocity | m/s | : | - |
| 6. | Type of fuel used | | : | Pet Coke + Coal |
| 7. | Quantity of fuel used | Kg/hr | : | - |
| 8. | Gas Flow rate | $Nm^3/hr.$ | : | - |

| S.No. | Parameters | Unit | | Results | Specification/ SPCB Norms | Method Used |
|---|---|---|---|---|---|---|
| 1. | Particulate Matter | $mg/Nm^3$ | : | - | 50 | IS 11255 (Part 1) : 1985 |
| 2. | Sulphur Dioxide($SO_2$) | $mg/Nm^3$ | : | - | 600 | IS 11255 (Part 2) : 1985 |
| 3. | Oxides of Nitrogen (NOx) | $mg/Nm^3$ | : | - | 450 | IS 11255 (Part 7) : 2005 |
| 4. | CO | $mg/Nm^3$ | : | - | N.A. | IS 11255 (Part 3): 2008 |

**Remark: Boiler was under Shutdown during the sampling period.**

**Authorized By -**

**Name : Sapana Amin** | **Designation : Lab Incharge**

NOTE:
1) Reports may be reproduced, if required, but only in full and only with written approval of the laboratory.
2) Re analysis of sample will be done, if requested within 7 days from the date of Reporting of sample if the samples are not consumed during analysis.
3) The results reported above relate to the sample identified under Sample Details.

----------END OF REPORT----------

## LABORATORY TEST REPORT - STACK

REPORT NO.: JUN23/016/11 (ULR- TC709923000013717F)

### SAMPLE DETAILS

| | | | |
|---|---|---|---|
| 1. | Name & Address of Client: Bharat Petroleum Corporation Ltd. Bina Refinery, Village: Agasod, Bina - 470124, Dist: Sagar, Madhya Pradesh, India. | | |
| 2. | Sample ID: 2148088246-016JN23SE11 | 3. | Client Representative: Mr. Anil Medhe |
| 4. | Sample Date: 06.06.2023 | 5. | Sampling Location: CPP Boiler - III |
| 6. | Sampling Time: 14:50 hr | 7. | Sampling Duration: 36 Mins |
| 8. | Analysis commenced on: 26.06.2023 | 9. | Analysis Completed on: 28.06.2023 |
| 10. | Reporting Date: 15.07.2023 | 11. | Discipline: Chemical |
| 12. | Sample Collected By: Mr. Jitendra Sinha | 13. | Group: Atmospheric Pollution |
| 14. | Sampling Procedure: IS Method | 15. | Product: Stack Emission |
| 16. | Description of Sample: Sampling Bottles: Sealed √ | Thimble:Packed √ | Bladder: Clamped √ |
| 17. | Sample Received Date: 26.06.2023 | | |

### STACK DETAILS

| S.No. | Parameters | Unit (SI) | | Description |
|---|---|---|---|---|
| 1. | Source | | : | **CPP Boiler - III** |
| 2. | Height | m | : | 100 |
| 3. | Diameter | m | : | 3.87 |
| 4. | Temperature | °c | : | 154 |
| 5. | Velocity | m/s | : | 16.50 |
| 6. | Type of fuel used | | : | Pet Coke + Coal |
| 7. | Quantity of fuel used | Kg/hr | : | 328 (Pet Coke) + 0.0 (Coal) |
| 8. | Gas Flow rate | $Nm^3/hr.$ | : | 488115.0 |

| S.No. | Parameters | Unit | | Results | Specification/ SPCB Norms | Method Used |
|---|---|---|---|---|---|---|
| 1. | Particulate Matter | $mg/Nm^3$ | : | 24 | 50 | IS 11255 (Part 1) : 1985 |
| 2. | Sulphur Dioxide($SO_2$) | $mg/Nm^3$ | : | 414.85 | 600 | IS 11255 (Part 2) : 1985 |
| 3. | Oxides of Nitrogen (NOx) | $mg/Nm^3$ | : | 314.60 | 450 | IS 11255 (Part 7) : 2005 |
| 4. | CO | $mg/Nm^3$ | : | 24.19 | N.A. | IS 11255 (Part 3): 2008 |

**Remark: (1) Flow Rate for PM – 21 LPM (2) Flow Rate for Gaseous sampling – 2 LPM.**

**Authorized By -**

**Name : Sapana Amin** | **Designation : Lab Incharge**

NOTE:
1) Reports may be reproduced, if required, but only in full and only with written approval of the laboratory.
2) Re analysis of sample will be done, if requested within 7 days from the date of Reporting of sample if the samples are not consumed during analysis.
3) The results reported above relate to the sample identified under Sample Details.

----------END OF REPORT----------

# KADAM ENVIRONMENTAL CONSULTANTS

An ISO 9001-2015 Certified Company (MoEF Approved)

871/B/3, Near Himalaya Machinery, GIDC Makarpura, Vadodara-10.
Phone : (O) 0265 - 6131000, 6131001


## ENVIRONMENTAL MONITORING REPORT

### LABORATORY TEST REPORT - STACK

REPORT NO.: JUN23/016/31

### SAMPLE DETAILS

| | | | |
|---|---|---|---|
| 1. | Name & Address of Client: Bharat Petroleum Corporation Ltd. Bina Refinery, Village: Agasod, Bina - 470124, Dist: Sagar, Madhya Pradesh, India. | | |
| 2. | Sample ID: 2148088246-016JN23SE11 | 3. | Client Representative: Mr. Anil Medhe |
| 4. | Sample Date: 06.06.2023 | 5. | Sampling Location: CPP Boiler - III |
| 6. | Sampling Time: 14:50 hr | 7. | Sampling Duration: 36 Mins |
| 8. | Analysis commenced on: 26.06.2023 | 9. | Analysis Completed on: 28.06.2023 |
| 10. | Reporting Date: 15.07.2023 | 11. | Discipline: Chemical |
| 12. | Sample Collected By: Mr. Jitendra Sinha | 13. | Group: Atmospheric Pollution |
| 14. | Sampling Procedure: IS Method | 15. | Product: Stack Emission |
| 16. | Description of Sample: Sampling Bottles: Sealed √ | Thimble:Packed√ | Bladder: Clamped √ |
| 17. | Sample Received Date: 26.06.2023 | | |

### STACK DETAILS

| S.No. | Parameters | Unit (SI) | | Description |
|---|---|---|---|---|
| 1. | Source | | : | **CPP Boiler - III** |
| 2. | Height | m | : | 100 |
| 3. | Diameter | m | : | 3.87 |
| 4. | Temperature | °c | : | 154 |
| 5. | Velocity | m/s | : | 16.50 |
| 6. | Type of fuel used | | : | Pet Coke + Coal |
| 7. | Quantity of fuel used | Kg/hr | : | 328 (Pet Coke) + 0.0 (Coal) |
| 8. | Gas Flow rate | $Nm^3/hr.$ | : | 488115.0 |

| S.No. | Parameters | Unit | | Results | Specification/ SPCB Norms | Method Used |
|---|---|---|---|---|---|---|
| 1. | Mercury | $mg/Nm^3$ | : | <0.02 | 0.03 | APHA 23rd Edition 3112-B |

**Remark: (1) Flow Rate for PM – 21 LPM (2) Flow Rate for Gaseous sampling – 2 LPM.**

**Authorized By -**

**Name : Sapana Amin** **Designation : Lab Incharge**

NOTE:
1) Reports may be reproduced, if required, but only in full and only with written approval of the laboratory.
2) Re analysis of sample will be done, if requested within 7 days from the date of Reporting of sample if the samples are not consumed during analysis.
3) The results reported above relate to the sample identified under Sample Details.

----------END OF REPORT----------

## LABORATORY TEST REPORT - STACK

**REPORT NO.: JUN23/016/09 (ULR- TC709923000013715F)**

### SAMPLE DETAILS

| | | | |
|---|---|---|---|
| 1. | Name & Address of Client: Bharat Petroleum Corporation Ltd. Bina Refinery, Village: Agasod, Bina - 470124, Dist: Sagar, Madhya Pradesh, India. | | |
| 2. | Sample ID: 2148088246-016JN23SE09 | 3. | Client Representative: Mr. Anil Medhe |
| 4. | Sample Date: 06.06.2023 | 5. | Sampling Location: SRU |
| 6. | Sampling Time: 16:10 hr | 7. | Sampling Duration: 44 Mins |
| 8. | Analysis commenced on: 26.06.2023 | 9. | Analysis Completed on: 28.06.2023 |
| 10. | Reporting Date: 15.07.2023 | 11. | Discipline: Chemical |
| 12. | Sample Collected By: Mr. Jitendra Sinha | 13. | Group: Atmospheric Pollution |
| 14. | Sampling Procedure: IS Method | 15. | Product: Stack Emission |
| 16. | Description of Sample: Sampling Bottles: Sealed √ | Thimble:Packed | Bladder: Clamped √ |
| 17. | Sample Received Date: 26.06.2023 | | |

### STACK DETAILS

| S.No. | Parameters | Unit (SI) | | Description |
|---|---|---|---|---|
| 1. | Source | | : | **SRU** |
| 2. | Height | m | : | 80 |
| 3. | Diameter | m | : | 1.23 |
| 4. | Temperature | °c | : | 268 |
| 5. | Velocity | m/s | : | 13.54 |
| 6. | Type of fuel used | | : | Fuel Gas |
| 7. | Quantity of fuel used | Kg/hr | : | 530.007 (F.Gas) |
| 8. | Gas Flow rate | $Nm^3/hr.$ | : | 31911.1 |

| S.No. | Parameters | Unit | | Results | Specification/ SPCB Norms | Method Used |
|---|---|---|---|---|---|---|
| 1. | Particulate Matter | $mg/Nm^3$ | : | 16 | N.A. | IS 11255 (Part 1) : 1985 |
| 2. | Sulphur Dioxide($SO_2$) | $mg/Nm^3$ | : | 308.49 | N.A. | IS 11255 (Part 2) : 1985 |
| 3. | Oxides of Nitrogen (NOx) | $mg/Nm^3$ | : | 90.81 | 250 | IS 11255 (Part 7) : 2005 |
| 4. | CO | $mg/Nm^3$ | : | 3.52 | 100 | IS 11255 (Part 3): 2008 |
| 5. | Nickel | $mg/Nm^3$ | : | <0.0001 | N.A | USEPA(2000)-Method 29 |
| 6. | $H_2S$ | $mg/Nm^3$ | : | N.D. | 10 | IS 11255 (Part-4): 2006 |

Remark:(1) Flow Rate for PM – 21 LPM (2) Flow Rate for Gaseous sampling – 2 LPM (3) Calorific Value in Kcal/kg (i) F.Oil – 10264(ii)F.Gas - 12077 (4) The Specification is computed based on the heat supplied by Gas & Liquid Fuels. N.D. - Not Detected.

**Authorized By -**

**Name : Sapana Amin** | **Designation : Lab Incharge**

NOTE:
1) Reports may be reproduced, if required, but only in full and only with written approval of the laboratory.
2) Re analysis of sample will be done, if requested within 7 days from the date of Reporting of sample if the samples are not consumed during analysis.
3) The results reported above relate to the sample identified under Sample Details.

----------END OF REPORT----------

# KADAM ENVIRONMENTAL CONSULTANTS

An ISO 9001-2015 Certified Company (MoEF Approved)

871/B/3, Near Himalaya Machinery, GIDC Makarpura, Vadodara-10.
Phone : (O) 0265 - 6131000, 6131001


## ENVIRONMENTAL MONITORING REPORT

### LABORATORY TEST REPORT - STACK

**REPORT NO.: JUN23/016/29**

### SAMPLE DETAILS

| | | | |
|---|---|---|---|
| 1. | Name & Address of Client: Bharat Petroleum Corporation Ltd. Bina Refinery, Village: Agasod, Bina - 470124, Dist: Sagar, Madhya Pradesh, India. | | |
| 2. | Sample ID: 2148088246-016JN23SE09 | 3. | Client Representative: Mr. Anil Medhe |
| 4. | Sample Date: 06.06.2023 | 5. | Sampling Location: SRU |
| 6. | Sampling Time: 16:10 hr | 7. | Sampling Duration: 44 Mins |
| 8. | Analysis commenced on: 26.06.2023 | 9. | Analysis Completed on: 28.06.2023 |
| 10. | Reporting Date: 15.07.2023 | 11. | Discipline: Chemical |
| 12. | Sample Collected By: Mr. Jitendra Sinha | 13. | Group: Atmospheric Pollution |
| 14. | Sampling Procedure: IS Method | 15. | Product: Stack Emission |
| 16. | Description of Sample: Sampling Bottles: Sealed √ | Thimble:Packed√ | Bladder: Clamped √ |
| 17. | Sample Received Date: 26.06.2023 | | |

### STACK DETAILS

| S.No. | Parameters | Unit (SI) | | Description |
|---|---|---|---|---|
| 1. | Source | | : | **SRU** |
| 2. | Height | m | : | 80 |
| 3. | Diameter | m | : | 1.23 |
| 4. | Temperature | °c | : | 268 |
| 5. | Velocity | m/s | : | 13.54 |
| 6. | Type of fuel used | | : | Fuel Gas |
| 7. | Quantity of fuel used | Kg/hr | : | 530.007 (F.Gas) |
| 8. | Gas Flow rate | $Nm^3/hr.$ | : | 31911.1 |

| S.No. | Parameters | Unit | | Results | Specification/ SPCB Norms | Method Used |
|---|---|---|---|---|---|---|
| 1. | Vanadium | $mg/Nm^3$ | : | N.D. | 5 | APHA 23rd Edition 3500-V B |

Remark:(1) Flow Rate for PM – 21 LPM (2) Flow Rate for Gaseous sampling – 2 LPM (3) Calorific Value in Kcal/kg (i) F.Oil – 10264(ii)F.Gas - 12077 (4) The Specification is computed based on the heat supplied by Gas & Liquid Fuels. **N.D. - Not Detected.**

**Authorized By -**

**Name : Sapana Amin** **Designation : Lab Incharge**

NOTE:
1) Reports may be reproduced, if required, but only in full and only with written approval of the laboratory.
2) Re analysis of sample will be done, if requested within 7 days from the date of Reporting of sample if the samples are not consumed during analysis.
3) The results reported above relate to the sample identified under Sample Details.

----------END OF REPORT----------

## LABORATORY TEST REPORT - STACK

REPORT NO.: JUN23/016/13 (ULR- TC709923000013719F)

### SAMPLE DETAILS

| | | | |
|---|---|---|---|
| 1. | Name & Address of Client: Bharat Petroleum Corporation Ltd. Bina Refinery, Village: Agasod, Bina - 470124, Dist.: Sagar, Madhya Pradesh, India. | | |
| 2. | Sample ID: 2148088246-016JN23SE13 | 3. | Client Representative: Mr. Anil Medhe |
| 4. | Sample Date: 15.06.2023 | 5. | Sampling Location: KHDS |
| 6. | Sampling Time: 13:10 hr | 7. | Sampling Duration: 46 Mins |
| 8. | Analysis commenced on: 26.06.2023 | 9. | Analysis Completed on: 28.06.2023 |
| 10. | Reporting Date: 15.07.2023 | 11. | Discipline: Chemical |
| 12. | Sample Collected By: Mr. Jitendra Sinha | 13. | Group: Atmospheric Pollution |
| 14. | Sampling Procedure: IS Method | 15. | Product: Stack Emission |
| 16. | Description of Sample: Sampling Bottles: Sealed √ | Thimble:Packed√ | Bladder: Clamped √ |
| 17. | Sample Received Date: 26.06.2023 | | |

### STACK DETAILS

| S.No. | Parameters | Unit (SI) | | Description |
|---|---|---|---|---|
| 1. | Source | | : | **KHDS** |
| 2. | Height | m | : | 60 |
| 3. | Diameter | m | : | 1.59 |
| 4. | Temperature | °c | : | 256 |
| 5. | Velocity | m/s | : | 12.99 |
| 6. | Type of fuel used | | : | Fuel Oil + Fuel Gas |
| 7. | Quantity of fuel used | Kg/hr | : | 2.085 (F.Oil) + 479.133 (F.Gas) |
| 8. | Gas Flow rate | $Nm^3/hr.$ | : | 52319.4 |

| S.No. | Parameters | Unit | | Results | Specification/ SPCB Norms | Method Used |
|---|---|---|---|---|---|---|
| 1. | Particulate Matter | $mg/Nm^3$ | : | 4 | 5 | IS 11255 (Part 1) : 1985 |
| 2. | Sulphur Dioxide($SO_2$) | $mg/Nm^3$ | : | 44.39 | 53 | IS 11255 (Part 2) : 1985 |
| 3. | Oxides of Nitrogen (NOx) | $mg/Nm^3$ | : | 30.62 | 250 | IS 11255 (Part 7) : 2005 |
| 4. | CO | $mg/Nm^3$ | : | 2.26 | 100 | IS 11255 (Part 3): 2008 |
| 5. | Nickel | $mg/Nm^3$ | : | <0.0001 | N.A. | USEPA(2000)-Method 29 |
| 6. | $H_2S$ | $mg/Nm^3$ | : | N.D. | N.A. | IS 11255 (Part-4): 2006 |

**Remark: (1) Flow Rate for PM – 21 LPM (2) Flow Rate for Gaseous sampling – 2 LPM. / N.D. - Not Detected.**

**Authorized By -**

**Name : Sapana Amin** | **Designation : Lab Incharge**

NOTE: 1) Reports may be reproduced, if required, but only in full and only with written approval of the laboratory.
2) Re analysis of sample will be done, if requested within 7 days from the date of Reporting of sample if the samples are not consumed during analysis.
3) The results reported above relate to the sample identified under Sample Details.

----------END OF REPORT----------

# KADAM ENVIRONMENTAL CONSULTANTS

An ISO 9001-2015 Certified Company (MoEF Approved)

871/B/3, Near Himalaya Machinery, GIDC Makarpura, Vadodara-10.
Phone : (O) 0265 - 6131000, 6131001


## ENVIRONMENTAL MONITORING REPORT

### LABORATORY TEST REPORT - STACK

**REPORT NO.: JUN23/016/33**

### SAMPLE DETAILS

| | | | |
|---|---|---|---|
| 1. | Name & Address of Client: Bharat Petroleum Corporation Ltd. Bina Refinery, Village: Agasod, Bina - 470124, Dist.: Sagar, Madhya Pradesh, India. | | |
| 2. | Sample ID: 2148088246-016JN23SE13 | 3. | Client Representative: Mr. Anil Medhe |
| 4. | Sample Date: 15.06.2023 | 5. | Sampling Location: KHDS |
| 6. | Sampling Time: 13:10 hr | 7. | Sampling Duration: 46 Mins |
| 8. | Analysis commenced on: 26.06.2023 | 9. | Analysis Completed on: 28.06.2023 |
| 10. | Reporting Date: 15.07.2023 | 11. | Discipline: Chemical |
| 12. | Sample Collected By: Mr. Jitendra Sinha | 13. | Group: Atmospheric Pollution |
| 14. | Sampling Procedure: IS Method | 15. | Product: Stack Emission |
| 16. | Description of Sample: Sampling Bottles: Sealed √ | Thimble:Packed√ | Bladder: Clamped √ |
| 17. | Sample Received Date: 26.06.2023 | | |

### STACK DETAILS

| S.No. | Parameters | Unit (SI) | | Description |
|---|---|---|---|---|
| 1. | Source | | : | **KHDS** |
| 2. | Height | m | : | 60 |
| 3. | Diameter | m | : | 1.59 |
| 4. | Temperature | °c | : | 256 |
| 5. | Velocity | m/s | : | 12.99 |
| 6. | Type of fuel used | | : | Fuel Oil + Fuel Gas |
| 7. | Quantity of fuel used | Kg/hr | : | 2.085 (F.Oil) + 479.133 (F.Gas) |
| 8. | Gas Flow rate | $Nm^3/hr.$ | : | 52319.4 |

| S.No. | Parameters | Unit | | Results | Specification/ SPCB Norms | Method Used |
|---|---|---|---|---|---|---|
| 1. | Vanadium | $mg/Nm^3$ | : | N.D. | 5 | APHA 23rd Edition 3500-V B |

Remark:(1) Flow Rate for PM – 21 LPM (2) Flow Rate for Gaseous sampling – 2 LPM (3) Calorific Value in Kcal/kg (i) F.Oil – 10264(ii)F.Gas - 12077 (4) The Specification is computed based on the heat supplied by Gas & Liquid Fuels. **N.D. - Not Detected.**

**Authorized By -**

**Name : Sapana Amin** **Designation : Lab Incharge**

NOTE:
1) Reports may be reproduced, if required, but only in full and only with written approval of the laboratory.
2) Re analysis of sample will be done, if requested within 7 days from the date of Reporting of sample if the samples are not consumed during analysis.
3) The results reported above relate to the sample identified under Sample Details.

----------END OF REPORT----------

## LABORATORY TEST REPORT - STACK

REPORT NO.: JUN23/016/12 (ULR- TC709923000013718F)

### SAMPLE DETAILS

| | | | |
|---|---|---|---|
| 1. | Name & Address of Client: Bharat Petroleum Corporation Ltd.<br>Bina Refinery, Village: Agasod, Bina - 470124, Dist: Sagar, Madhya Pradesh, India. | | |
| 2. | Sample ID: 2148088246-016JN23SE12 | 3. | Client Representative: Mr. Anil Medhe |
| 4. | Sample Date: 06.06.2023 | 5. | Sampling Location: Utility Boiler |
| 6. | Sampling Time: 12:40 hr | 7. | Sampling Duration: 46 Mins |
| 8. | Analysis commenced on: 26.06.2023 | 9. | Analysis Completed on: 28.06.2023 |
| 10. | Reporting Date: 15.07.2023 | 11. | Discipline: Chemical |
| 12. | Sample Collected By: Mr. Jitendra Sinha | 13. | Group: Atmospheric Pollution |
| 14. | Sampling Procedure: IS Method | 15. | Product: Stack Emission |
| 16. | Description of Sample: Sampling Bottles: Sealed √ | Thimble:Packed√ | Bladder: Clamped √ |
| 17. | Sample Received Date: 26.06.2023 | | |

### STACK DETAILS

| S.No. | Parameters | Unit (SI) | | Description |
|---|---|---|---|---|
| 1. | Source | | : | **Utility Boiler** |
| 2. | Height | m | : | 123 |
| 3. | Diameter | m | : | 2.67 |
| 4. | Temperature | °c | : | 128 |
| 5. | Velocity | m/s | : | 12.72 |
| 6. | Type of fuel used | | : | Fuel Oil + Fuel Gas |
| 7. | Quantity of fuel used | Kg/hr | : | 1434.48 (F.Oil) + 0.0 (F.Gas) |
| 8. | Gas Flow rate | $Nm^3/hr.$ | : | 191366.9 |

| S.No. | Parameters | Unit | | Results | Specification/ SPCB Norms | Method Used |
|---|---|---|---|---|---|---|
| 1. | Particulate Matter | $mg/Nm^3$ | : | 35 | 50 | IS 11255 (Part 1) : 1985 |
| 2. | Sulphur Dioxide($SO_2$) | $mg/Nm^3$ | : | 600.63 | 850 | IS 11255 (Part 2) : 1985 |
| 3. | Oxides of Nitrogen (NOx) | $mg/Nm^3$ | : | 294.45 | 350 | IS 11255 (Part 7) : 2005 |
| 4. | CO | $mg/Nm^3$ | : | 10.14 | 150 | IS 11255 (Part 3): 2008 |
| 5. | Nickel | $mg/Nm^3$ | : | <0.0001 | N.A | USEPA(2000)-Method 29 |

**Remark: (1) Flow Rate for PM – 21 LPM (2) Flow Rate for Gaseous sampling – 2 LPM.**

**Authorized By -**

**Name : Sapana Amin** | **Designation : Lab Incharge**

NOTE:
1) Reports may be reproduced, if required, but only in full and only with written approval of the laboratory.
2) Re analysis of sample will be done, if requested within 7 days from the date of Reporting of sample if the samples are not consumed during analysis.
3) The results reported above relate to the sample identified under Sample Details.

----------END OF REPORT----------

# KADAM ENVIRONMENTAL CONSULTANTS

An ISO 9001-2015 Certified Company (MoEF Approved)

871/B/3, Near Himalaya Machinery, GIDC Makarpura, Vadodara-10.
Phone : (O) 0265 - 6131000, 6131001


## ENVIRONMENTAL MONITORING REPORT

### LABORATORY TEST REPORT - STACK

REPORT NO.: JUN23/016/32

### SAMPLE DETAILS

| | | | |
|---|---|---|---|
| 1. | Name & Address of Client: Bharat Petroleum Corporation Ltd. Bina Refinery, Village: Agasod, Bina - 470124, Dist: Sagar, Madhya Pradesh, India. | | |
| 2. | Sample ID: 2148088246-016JN23SE12 | 3. | Client Representative: Mr. Anil Medhe |
| 4. | Sample Date: 06.06.2023 | 5. | Sampling Location: Utility Boiler |
| 6. | Sampling Time: 12:40 hr | 7. | Sampling Duration: 46 Mins |
| 8. | Analysis commenced on: 26.06.2023 | 9. | Analysis Completed on: 28.06.2023 |
| 10. | Reporting Date: 15.07.2023 | 11. | Discipline: Chemical |
| 12. | Sample Collected By: Mr. Jitendra Sinha | 13. | Group: Atmospheric Pollution |
| 14. | Sampling Procedure: IS Method | 15. | Product: Stack Emission |
| 16. | Description of Sample: Sampling Bottles: Sealed √ | Thimble:Packed√ | Bladder: Clamped √ |
| 17. | Sample Received Date: 26.06.2023 | | |

### STACK DETAILS

| S.No. | Parameters | Unit (SI) | | Description |
|---|---|---|---|---|
| 1. | Source | | : | **Utility Boiler** |
| 2. | Height | m | : | 123 |
| 3. | Diameter | m | : | 2.67 |
| 4. | Temperature | °c | : | 128 |
| 5. | Velocity | m/s | : | 12.72 |
| 6. | Type of fuel used | | : | Fuel Oil + Fuel Gas |
| 7. | Quantity of fuel used | Kg/hr | : | 1434.48 (F.Oil) + 0.0 (F.Gas) |
| 8. | Gas Flow rate | $Nm^3/hr.$ | : | 191366.9 |

| S.No. | Parameters | Unit | | Results | Specification/ SPCB Norms | Method Used |
|---|---|---|---|---|---|---|
| 1. | Vanadium | $mg/Nm^3$ | : | N.D. | 5 | APHA 23rd Edition 3500-V B |

Remark:(1) Flow Rate for PM – 21 LPM (2) Flow Rate for Gaseous sampling – 2 LPM. (3) Calorific Value in Kcal/kg (i) F.Oil – 10264(ii)F.Gas - 12077

**Authorized By -**

**Name : Sapana Amin** **Designation : Lab Incharge**

NOTE:
1) Reports may be reproduced, if required, but only in full and only with written approval of the laboratory.
2) Re analysis of sample will be done, if requested within 7 days from the date of Reporting of sample if the samples are not consumed during analysis.
3) The results reported above relate to the sample identified under Sample Details.

----------END OF REPORT----------

KADAM ENVIRONMENTAL CONSULTANTS
An ISO 9001-2015 Certified Company (MoEF Approved)
871/B/3, Near Himalaya Machinery, GIDC Makarpura, Vadodara-10.
Phone : (O) 0265 - 6131000, 6131001

TC-7089

## ENVIRONMENTAL MONITORING REPORT

## LABORATORY TEST REPORT - EFFLUENT WATER

**REPORT NO.: OCT23/016/40 (ULR- TC709923000021294F)**

### SAMPLE DETAILS

| | | | |
|---|---|---|---|
| 1. | Name & Address of Client: Bharat Petroleum Corporation Ltd.<br>Bina Refinery, Village: Agasod, Bina - 470124, Dist: Sagar, Madhya Pradesh, India. | | |
| 2. | Sample ID:2148088246-016OC23EF03 | 3. | Client Representative: Mr. Anil Medhe |
| 4. | Sample Date: 12.10.2023 | 5. | Sample Collected By: Mr. Jitendra Sinha |
| 6. | Analysis commenced on: 16.10.2023 | 7. | Analysis Completed on: 21.10.2023 |
| 8. | Reporting Date: 01.11.2023 | 9. | Discipline: Chemical |
| 10. | Packing Condition & Quantity: Sealed √ | 11. | Group: Pollution and Environment |
| 12. | Sampling Location: ETP Outlet | 13. | Product: Waste Water |
| 14. | Sampling Method: IS:3025 (Part 1)-1987 | 15. | Sample Received Date: 16.10.2023 |

### TEST RESULTS

| S.No. | Parameters | Unit (SI) | | Results | Specification/SPCB Norms/BIS Standards | Method Used |
|---|---|---|---|---|---|---|
| 1. | pH | | : | 7.02 | 6.0 – 8.5 | APHA 23rd Edition 4500-H+ B |
| 2. | Suspended Solids | mg/L | : | 16 | 20 | APHA 23rd Edition 2540 D |
| 3. | COD | mg/L | : | 60 | 125 | APHA 23rd Edition 5220 B |
| 4. | BOD (3 days at 27 °C) | mg/L | : | 13 | 15 | IS 3025 (Part 44) : 1993 |
| 5. | Oil & Grease | mg/L | : | <1 | 5 | APHA 23rd Edition 5520 B |
| 6. | Ammonia | mg/L | : | 4.87 | 15 | IS 3025 (PP 34): 1988 |
| 7. | Phenolic Compound | mg/L | : | <0.02 | 0.35 | APHA 23rd Edition 5530 D |
| 8. | Sulphide | mg/L | : | <0.5 | 0.5 | IS 3025 (Part – 29): 1986 |
| 9. | Phosphate | mg/L | : | <0.02 | 3 | APHA 23rd Edition 4500 P – C |
| 10. | Hexavalent Chromium | mg/L | : | <0.02 | 0.1 | APHA 23rd Edition 3500 Cr - B |
| 11. | Total Chromium | mg/L | : | <0.02 | 2.0 | APHA 23rd Edition 3500 Cr - B |
| 12. | Lead | mg/L | : | <0.02 | 0.1 | APHA 23rd Edition 3111 B |
| 13. | Mercury | mg/L | : | <0.01 | 0.01 | APHA 23rd Edition 3112-B |
| 14. | Zinc | mg/L | : | <0.03 | 5.0 | APHA 23rd Edition 3111 B |
| 15. | Nickel | mg/L | : | <0.02 | 1 | APHA 23rd Edition 3111 B |
| 16. | Copper | mg/L | : | <0.03 | 1 | APHA 23rd Edition 3111 B |
| 17. | Vanadium | mg/L | : | <0.002 | 0.2 | APHA 23rd Edition 3500-V B |

**Remark :**

**Authorised By -**

**Name : Bhavisha Pandya** **Designation : Sr.Chemist**

NOTE:
1) Reports may be reproduced, if required, but only in full and only with written approval of the laboratory.
2) Re analysis of sample will be done, if requested within 15 days from the date of Reporting of sample if the samples are not consumed during analysis.
3) The results reported above relate to the sample identified under Sample Details.

----------END OF REPORT----------

# KADAM ENVIRONMENTAL CONSULTANTS

An ISO 9001-2015 Certified Company (MoEF Approved)

871/B/3, Near Himalaya Machinery, GIDC Makarpura, Vadodara-10.
Phone : (O) 0265 - 6131000, 6131001


## ENVIRONMENTAL MONITORING REPORT

### LABORATORY TEST REPORT - EFFLUENT WATER

**REPORT NO.: OCT23/016/44**

**SAMPLE DETAILS**

| | | | |
|---|---|---|---|
| 1. | Name & Address of Client: Bharat Petroleum Corporation Ltd.<br>Bina Refinery, Village: Agasod, Bina - 470124, Dist: Sagar, Madhya Pradesh, India. | | |
| 2. | Sample ID:2148088246-016OC23EF03 | 3. | Client Representative: Mr. Anil Medhe |
| 4. | Sample Date: 12.10.2023 | 5. | Sample Collected By: Mr. Jitendra Sinha |
| 6. | Analysis commenced on: 16.10.2023 | 7. | Analysis Completed on: 21.10.2023 |
| 8. | Reporting Date: 01.11.2023 | 9. | Discipline: Chemical |
| 10. | Packing Condition & Quantity: Sealed √ | 11. | Group: Pollution and Environment |
| 12. | Sampling Location: ETP Outlet | 13. | Product: Waste Water |
| 14. | Sampling Method: IS:3025 (Part 1)-1987 | 15. | Sample Received Date: 16.10.2023 |

**TEST RESULTS**

| S.No. | Parameters | Unit (SI) | | Results | Specification/SPCB Norms/BIS Standards | Method Used |
|---|---|---|---|---|---|---|
| 1. | Cyanide | mg/L | : | <0.05 | 0.2 | APHA: 23rd Edition 4500 CN E |
| 2. | TKN | mg/L | : | 4.87 | 40 | APHA: (4500 N) 23rd Edition |
| 3. | Benzene | mg/L | : | N.D. | 0.1 | AOAC: 18th Edition |
| 4. | Benzo(O) Pyrene | mg/L | : | N.D. | 0.2 | AOAC: 18th Edition |

**Remark : N.D. - Not Detected.**

**Authorised By :-**

**Name : Bhavisha Pandya** **Designation : Sr.Chemist**

NOTE:
1) Reports may be reproduced, if required, but only in full and only with written approval of the laboratory.
2) Re analysis of sample will be done, if requested within 15 days from the date of Reporting of sample if the samples are not consumed during analysis.
3) The results reported above relate to the sample identified under Sample Details.

----------END OF REPORT----------

## LABORATORY TEST REPORT - EFFLUENT

**REPORT NO.: SEP23/031/54 (ULR- TC709923000019194F)**

### SAMPLE DETAILS

| | | | |
|---|---|---|---|
| 1. | Name & Address of Client: Bharat Petroleum Corporation Ltd.<br>Bina Refinery, Village: Agasod, Bina - 470124, Dist: Sagar, Madhya Pradesh, India. | | |
| 2. | Sample ID:2148088246-031SE23EF04 | 3. | Client Representative: Mr. Anil Medhe |
| 4. | Sample Date: 04.09.2023 | 5. | Sample Collected By: Mr. Jitendra Sinha |
| 6. | Analysis commenced on: 13.09.2023 | 7. | Analysis Completed on: 19.09.2023 |
| 8. | Reporting Date: 26.09.2023 | 9. | Discipline: Chemical |
| 10. | Packing Condition & Quantity: Sealed √ | 11. | Group: Pollution and Environment |
| 12. | Sampling Location: ETP Outlet | 13. | Product: Waste Water |
| 14. | Sampling Method: IS:3025 (Part 1)-1987 | 15. | Sample Received Date: 13.09.2023 |

### TEST RESULTS

| S.No. | Parameters | Unit (SI) | | Results | Specification/SPCB Norms/BIS Standards | Method Used |
|---|---|---|---|---|---|---|
| 1. | pH | | : | 7.88 | 6.0 – 8.5 | APHA 23rd Edition 4500-H+ B |
| 2. | Suspended Solids | mg/L | : | 9 | 20 | APHA 23rd Edition 2540 D |
| 3. | COD | mg/L | : | 47 | 125 | APHA 23rd Edition 5220 B |
| 4. | BOD (3 days at 27 °C) | mg/L | : | 14 | 15 | IS 3025 (Part 44) : 1993 |
| 5. | Oil & Grease | mg/L | : | <1 | 5 | APHA 23rd Edition 5520 B |
| 6. | Ammonia | mg/L | : | 12.04 | 15 | IS 3025 (PP 34): 1988 |
| 7. | Phenolic Compound | mg/L | : | <0.02 | 0.35 | APHA 23rd Edition 5530 D |
| 8. | Sulphide | mg/L | : | <0.5 | 0.5 | IS 3025 (Part – 29): 1986 |
| 9. | Phosphate | mg/L | : | <0.02 | 3 | APHA 23rd Edition 4500 P – C |
| 10. | Hexavalent Chromium | mg/L | : | <0.02 | 0.1 | APHA 23rd Edition 3500 Cr - B |
| 11. | Total Chromium | mg/L | : | <0.001 | 2.0 | APHA 23rd Edition 3125 B |
| 12. | Lead | mg/L | : | <0.001 | 0.1 | APHA 23rd Edition 3125 B |
| 13. | Mercury | mg/L | : | <0.001 | 0.01 | APHA 23rd Edition 3125 B |
| 14. | Zinc | mg/L | : | <0.003 | 5.0 | APHA 23rd Edition 3125 B |
| 15. | Nickel | mg/L | : | <0.001 | 1 | APHA 23rd Edition 3125 B |
| 16. | Copper | mg/L | : | <0.001 | 1 | APHA 23rd Edition 3125 B |
| 17. | Vanadium | mg/L | : | <0.001 | 0.2 | APHA 23rd Edition 3125 B |

**Remark :**

**Authorised By -**

**Name : Sapana Amin** **Designation : Lab Incharge**

NOTE:
1) Reports may be reproduced, if required, but only in full and only with written approval of the laboratory.
2) Re analysis of sample will be done, if requested within 15 days from the date of Reporting of sample if the samples are not consumed during analysis.
3) The results reported above relate to the sample identified under Sample Details.

----------END OF REPORT----------

## LABORATORY TEST REPORT - EFFLUENT

**REPORT NO.: SEP23/031/58**

### SAMPLE DETAILS

| | | | |
|---|---|---|---|
| 1. | Name & Address of Client: Bharat Petroleum Corporation Ltd.<br>Bina Refinery, Village: Agasod, Bina - 470124, Dist: Sagar, Madhya Pradesh, India. | | |
| 2. | Sample ID:2148088246-031SE23EF04 | 3. | Client Representative: Mr. Anil Medhe |
| 4. | Sample Date: 04.09.2023 | 5. | Sample Collected By: Mr. Jitendra Sinha |
| 6. | Analysis commenced on: 13.09.2023 | 7. | Analysis Completed on: 19.09.2023 |
| 8. | Reporting Date: 26.09.2023 | 9. | Discipline: Chemical |
| 10. | Packing Condition & Quantity: Sealed √ | 11. | Group: Pollution and Environment |
| 12. | Sampling Location: ETP Outlet | 13. | Product: Waste Water |
| 14. | Sampling Method: IS:3025 (Part 1)-1987 | 15. | Sample Received Date: 13.09.2023 |

### TEST RESULTS

| S.No. | Parameters | Unit (SI) | | Results | Specification/SPCB Norms/BIS Standards | Method Used |
|---|---|---|---|---|---|---|
| 1. | Cyanide | mg/L | : | <0.05 | 0.2 | APHA: 23rd Edition 4500 CN E |
| 2. | TKN | mg/L | : | 12.21 | 40 | APHA: (4500 N) 23rd Edition |
| 3. | Benzene | mg/L | : | N.D. | 0.1 | AOAC: 18th Edition |
| 4. | Benzo(O) Pyrene | mg/L | : | N.D. | 0.2 | AOAC: 18th Edition |

**Remark : N.D. - Not Detected**

**Authorised By -**

**Name : Sapana Amin** **Designation : Lab Incharge**

NOTE:
1) Reports may be reproduced, if required, but only in full and only with written approval of the laboratory.
2) Re analysis of sample will be done, if requested within 15 days from the date of Reporting of sample if the samples are not consumed during analysis.
3) The results reported above relate to the sample identified under Sample Details.

----------END OF REPORT----------

# KADAM ENVIRONMENTAL CONSULTANTS

An ISO 9001-2015 Certified Company (MoEF Approved)

871/B/3, Near Himalaya Machinery, GIDC Makarpura, Vadodara-10.
Phone : (O) 0265 - 6131000, 6131001


**ENVIRONMENTAL MONITORING REPORT**

## LABORATORY TEST REPORT - EFFLUENT WATER

**REPORT NO.: AUG23/098/41**

### SAMPLE DETAILS

| | | | |
|---|---|---|---|
| 1. | Name & Address of Client: Bharat Petroleum Corporation Ltd.<br>Bina Refinery, Village: Agasod, Bina - 470124, Dist: Sagar, Madhya Pradesh, India. | | |
| 2. | Sample ID:2148088246-098AU23EF03 | 3. | Client Representative: Mr. Anil Medhe |
| 4. | Sample Date: 14.08.2023 | 5. | Sample Collected By: Mr. Jitendra Sinha |
| 6. | Analysis commenced on: 21.08.2023 | 7. | Analysis Completed on: 28.08.2023 |
| 8. | Reporting Date: 28.08.2023 | 9. | Discipline: Chemical |
| 10. | Packing Condition & Quantity: Sealed √ | 11. | Group: Pollution and Environment |
| 12. | Sampling Location: ETP Outlet | 13. | Product: Waste Water |
| 14. | Sampling Method: IS:3025 (Part 1)-1987 | 15. | Sample Received Date: 21.08.2023 |

### TEST RESULTS

| S.No. | Parameters | Unit (SI) | | Results | Specification/SPCB Norms/BIS Standards | Method Used |
|---|---|---|---|---|---|---|
| 1. | Cyanide | mg/L | : | <0.05 | 0.2 | APHA: 23rd Edition 4500 CN E |
| 2. | TKN | mg/L | : | 11.51 | 40 | APHA: (4500 N) 23rd Edition |
| 3. | Benzene | mg/L | : | N.D. | 0.1 | AOAC: 18th Edition |
| 4. | Benzo(O) Pyrene | mg/L | : | N.D. | 0.2 | AOAC: 18th Edition |

**Remark : N.D. - Not Detected.**

**Authorised By :-**

**Name : Bhavisha Pandya** **Designation : Sr.Chemist**

NOTE:
1) Reports may be reproduced, if required, but only in full and only with written approval of the laboratory.
2) Re analysis of sample will be done, if requested within 15 days from the date of Reporting of sample if the samples are not consumed during analysis.
3) The results reported above relate to the sample identified under Sample Details.

----------END OF REPORT----------

## LABORATORY TEST REPORT - EFFLUENT WATER

**REPORT NO.: AUG23/098/37 (ULR- TC70992300001671 9F)**

### SAMPLE DETAILS

| | | | |
|---|---|---|---|
| 1. | Name & Address of Client: Bharat Petroleum Corporation Ltd.<br>Bina Refinery, Village: Agasod, Bina - 470124, Dist: Sagar, Madhya Pradesh, India. | | |
| 2. | Sample ID:2148088246-098AU23EF03 | 3. | Client Representative: Mr. Anil Medhe |
| 4. | Sample Date: 14.08.2023 | 5. | Sample Collected By: Mr. Jitendra Sinha |
| 6. | Analysis commenced on: 21.08.2023 | 7. | Analysis Completed on: 28.08.2023 |
| 8. | Reporting Date: 28.08.2023 | 9. | Discipline: Chemical |
| 10. | Packing Condition & Quantity: Sealed √ | 11. | Group: Pollution and Environment |
| 12. | Sampling Location: ETP Outlet | 13. | Product: Waste Water |
| 14. | Sampling Method: IS:3025 (Part 1)-1987 | 15. | Sample Received Date: 21.08.2023 |

### TEST RESULTS

| S.No. | Parameters | Unit (SI) | | Results | Specification/SPCB Norms/BIS Standards | Method Used |
|---|---|---|---|---|---|---|
| 1. | pH | | : | 7.76 | 6.0 – 8.5 | APHA 23rd Edition 4500-H+ B |
| 2. | Suspended Solids | mg/L | : | 7 | 20 | APHA 23rd Edition 2540 D |
| 3. | COD | mg/L | : | 35 | 125 | APHA 23rd Edition 5220 B |
| 4. | BOD (3 days at 27 °C) | mg/L | : | 11 | 15 | IS 3025 (Part 44) : 1993 |
| 5. | Oil & Grease | mg/L | : | <1 | 5 | APHA 23rd Edition 5520 B |
| 6. | Ammonia | mg/L | : | 11.18 | 15 | IS 3025 (PP 34): 1988 |
| 7. | Phenolic Compound | mg/L | : | <0.02 | 0.35 | APHA 23rd Edition 5530 D |
| 8. | Sulphide | mg/L | : | <0.5 | 0.5 | IS 3025 (Part – 29): 1986 |
| 9. | Phosphate | mg/L | : | <0.02 | 3 | APHA 23rd Edition 4500 P – C |
| 10. | Hexavalent Chromium | mg/L | : | <0.02 | 0.1 | APHA 23rd Edition 3500 Cr - B |
| 11. | Total Chromium | mg/L | : | <0.02 | 2.0 | APHA 23rd Edition 3500 Cr - B |
| 12. | Lead | mg/L | : | <0.02 | 0.1 | APHA 23rd Edition 3111 B |
| 13. | Mercury | mg/L | : | <0.01 | 0.01 | APHA 23rd Edition 3112-B |
| 14. | Zinc | mg/L | : | <0.03 | 5.0 | APHA 23rd Edition 3111 B |
| 15. | Nickel | mg/L | : | <0.02 | 1 | APHA 23rd Edition 3111 B |
| 16. | Copper | mg/L | : | <0.03 | 1 | APHA 23rd Edition 3111 B |
| 17. | Vanadium | mg/L | : | <0.002 | 0.2 | APHA 23rd Edition 3500-V B |

**Remark :**

**Authorised By -**

**Name : Bhavisha Pandya** **Designation : Sr.Chemist**

NOTE:
1) Reports may be reproduced, if required, but only in full and only with written approval of the laboratory.
2) Re analysis of sample will be done, if requested within 15 days from the date of Reporting of sample if the samples are not consumed during analysis.
3) The results reported above relete to the sample identified under Sample Details.

----------END OF REPORT----------

## LABORATORY TEST REPORT - EFFLUENT

REPORT NO.: JUL23/033/11 (ULR- TC709923000014625F)

### SAMPLE DETAILS

| | | | |
|---|---|---|---|
| 1. | Name & Address of Client: Bharat Petroleum Corporation Ltd.<br>Bina Refinery, Village: Agasod, Bina - 470124, Dist: Sagar, Madhya Pradesh, India. | | |
| 2. | Sample ID:2148088246-033JL23EF03 | 3. | Client Representative: Mr. Anil Medhe |
| 4. | Sample Date: 03.07.2023 | 5. | Sample Collected By: Mr. Jitendra Sinha |
| 6. | Analysis commenced on: 10.07.2023 | 7. | Analysis Completed on: 17.07.2023 |
| 8. | Reporting Date: 26.07.2023 | 9. | Discipline: Chemical |
| 10. | Packing Condition & Quantity: Sealed √ | 11. | Group: Pollution and Environment |
| 12. | Sampling Location: ETP Outlet | 13. | Product: Waste Water |
| 14. | Sampling Method: IS:3025 (Part 1)-1987 | 15. | Sample Received Date: 10.07.2023 |

### TEST RESULTS

| S.No. | Parameters | Unit (SI) | | Results | Specification/SPCB Norms/BIS Standards | Method Used |
|---|---|---|---|---|---|---|
| 1. | pH | | : | 7.07 | 6.0 – 8.5 | APHA 23rd Edition 4500-H+ B |
| 2. | Suspended Solids | mg/L | : | 17 | 20 | APHA 23rd Edition 2540 D |
| 3. | COD | mg/L | : | 32 | 125 | APHA 23rd Edition 5220 B |
| 4. | BOD (3 days at 27 °C) | mg/L | : | 8 | 15 | IS 3025 (Part 44) : 1993 |
| 5. | Oil & Grease | mg/L | : | <1 | 5 | APHA 23rd Edition 5520 B |
| 6. | Ammonia | mg/L | : | 5.64 | 15 | IS 3025 (PP 34): 1988 |
| 7. | Phenolic Compound | mg/L | : | <0.02 | 0.35 | APHA 23rd Edition 5530 D |
| 8. | Sulphide | mg/L | : | <0.5 | 0.5 | IS 3025 (Part – 29): 1986 |
| 9. | Phosphate | mg/L | : | <0.02 | 3 | APHA 23rd Edition 4500 P – C |
| 10. | Hexavalent Chromium | mg/L | : | <0.02 | 0.1 | APHA 23rd Edition 3500 Cr - B |
| 11. | Total Chromium | mg/L | : | <0.02 | 2.0 | APHA 23rd Edition 3500 Cr - B |
| 12. | Lead | mg/L | : | <0.02 | 0.1 | APHA 23rd Edition 3111 B |
| 13. | Mercury | mg/L | : | <0.01 | 0.01 | APHA 23rd Edition 3112-B |
| 14. | Zinc | mg/L | : | <0.03 | 5.0 | APHA 23rd Edition 3111 B |
| 15. | Nickel | mg/L | : | <0.02 | 1 | APHA 23rd Edition 3111 B |
| 16. | Copper | mg/L | : | <0.03 | 1 | APHA 23rd Edition 3111 B |
| 17. | Vanadium | mg/L | : | <0.002 | 0.2 | APHA 23rd Edition 3500-V B |

**Remark :**

**Authorised By -**

**Name : Sapana Amin** **Designation : Lab Incharge**

NOTE:
1) Reports may be reproduced, if required, but only in full and only with written approval of the laboratory.
2) Re analysis of sample will be done, if requested within 15 days from the date of Reporting of sample if the samples are not consumed during analysis.
3) The results reported above relate to the sample identified under Sample Details.

----------END OF REPORT----------

## LABORATORY TEST REPORT - EFFLUENT

**REPORT NO.: JUL23/033/15**

### SAMPLE DETAILS

| | | | |
|---|---|---|---|
| 1. | Name & Address of Client: Bharat Petroleum Corporation Ltd.<br>Bina Refinery, Village: Agasod, Bina - 470124, Dist: Sagar, Madhya Pradesh, India. | | |
| 2. | Sample ID:2148088246-033JL23EF03 | 3. | Client Representative: Mr. Anil Medhe |
| 4. | Sample Date: 03.07.2023 | 5. | Sample Collected By: Mr. Jitendra Sinha |
| 6. | Analysis commenced on: 10.07.2023 | 7. | Analysis Completed on: 17.07.2023 |
| 8. | Reporting Date: 26.07.2023 | 9. | Discipline: Chemical |
| 10. | Packing Condition & Quantity: Sealed √ | 11. | Group: Pollution and Environment |
| 12. | Sampling Location: ETP Outlet | 13. | Product: Waste Water |
| 14. | Sampling Method: IS:3025 (Part 1)-1987 | 15. | Sample Received Date: 10.07.2023 |

### TEST RESULTS

| S.No. | Parameters | Unit (SI) | | Results | Specification/SPCB Norms/BIS Standards | Method Used |
|---|---|---|---|---|---|---|
| 1. | Cyanide | mg/L | : | <0.05 | 0.2 | APHA: 23rd Edition 4500 CN E |
| 2. | TKN | mg/L | : | 5.08 | 40 | APHA: (4500 N) 23rd Edition |
| 3. | Benzene | mg/L | : | N.D. | 0.1 | AOAC: 18th Edition |
| 4. | Benzo(O) Pyrene | mg/L | : | N.D. | 0.2 | AOAC: 18th Edition |

**Remark : N.D. - Not Detected**

**Authorised By -**

**Name : Sapana Amin** **Designation : Lab Incharge**

NOTE:
1) Reports may be reproduced, if required, but only in full and only with written approval of the laboratory.
2) Re analysis of sample will be done, if requested within 15 days from the date of Reporting of sample if the samples are not consumed during analysis.
3) The results reported above relate to the sample identified under Sample Details.

----------**END OF REPORT**----------

## LABORATORY TEST REPORT - EFFLUENT

**REPORT NO.: JUN23/016/58**

### SAMPLE DETAILS

| | | | |
|---|---|---|---|
| 1. | Name & Address of Client: Bharat Petroleum Corporation Ltd.<br>Bina Refinery, Village: Agasod, Bina - 470124, Dist: Sagar, Madhya Pradesh, India. | | |
| 2. | Sample ID:2148088246-016JN23EF04 | 3. | Client Representative: Mr. Anil Medhe |
| 4. | Sample Date: 12.06.2023 | 5. | Sample Collected By: Mr. Jitendra Sinha |
| 6. | Analysis commenced on: 19.06.2023 | 7. | Analysis Completed on: 15.07.2023 |
| 8. | Reporting Date: 15.07.2023 | 9. | Discipline: Chemical |
| 10. | Packing Condition & Quantity: Sealed √ | 11. | Group: Pollution and Environment |
| 12. | Sampling Location: ETP Outlet | 13. | Product: Waste Water |
| 14. | Sampling Method: IS:3025 (Part 1)-1987 | 15. | Sample Received Date: 19.06.2023 |

### TEST RESULTS

| S.No. | Parameters | Unit (SI) | | Results | Specification/SPCB Norms/BIS Standards | Method Used |
|---|---|---|---|---|---|---|
| 1. | Cyanide | mg/L | : | <0.05 | 0.2 | APHA: 23rd Edition 4500 CN E |
| 2. | TKN | mg/L | : | 3.84 | 40 | APHA: (4500 N) 23rd Edition |
| 3. | Benzene | mg/L | : | N.D. | 0.1 | AOAC: 18th Edition |
| 4. | Benzo(O) Pyrene | mg/L | : | N.D. | 0.2 | AOAC: 18th Edition |

**Remark : N.D. - Not Detected**

**Authorised By -**

**Name : Sapana Amin** **Designation : Lab Incharge**

NOTE:
1) Reports may be reproduced, if required, but only in full and only with written approval of the laboratory.
2) Re analysis of sample will be done, if requested within 15 days from the date of Reporting of sample if the samples are not consumed during analysis.
3) The results reported above relate to the sample identified under Sample Details.

----------END OF REPORT----------

TC-7989

# KADAM ENVIRONMENTAL CONSULTANTS

An ISO 9001-2015 Certified Company (MoEF Approved)

871/B/3, Near Himalaya Machinery, GIDC Makarpura, Vadodara-10.
Phone : (O) 0265 - 6131000, 6131001

## ENVIRONMENTAL MONITORING REPORT

## LABORATORY TEST REPORT - EFFLUENT

**REPORT NO.: JUN23/016/54 (ULR- TC709923000013738F)**

### SAMPLE DETAILS

| | | | |
|---|---|---|---|
| 1. | Name & Address of Client: Bharat Petroleum Corporation Ltd.<br>Bina Refinery, Village: Agasod, Bina - 470124, Dist: Sagar, Madhya Pradesh, India. | | |
| 2. | Sample ID:2148088246-016JN23EF04 | 3. | Client Representative: Mr. Anil Medhe |
| 4. | Sample Date: 12.06.2023 | 5. | Sample Collected By: Mr. Jitendra Sinha |
| 6. | Analysis commenced on: 19.06.2023 | 7. | Analysis Completed on: 15.07.2023 |
| 8. | Reporting Date: 15.07.2023 | 9. | Discipline: Chemical |
| 10. | Packing Condition & Quantity: Sealed √ | 11. | Group: Pollution and Environment |
| 12. | Sampling Location: ETP Outlet | 13. | Product: Waste Water |
| 14. | Sampling Method: IS:3025 (Part 1)-1987 | 15. | Sample Received Date: 19.06.2023 |

### TEST RESULTS

| S.No. | Parameters | Unit (SI) | | Results | Specification/SPCB Norms/BIS Standards | Method Used |
|---|---|---|---|---|---|---|
| 1. | pH | | : | 6.36 | 6.0 – 8.5 | APHA 23rd Edition 4500-H+ B |
| 2. | Suspended Solids | mg/l | : | 14 | 20 | APHA 23rd Edition 2540 D |
| 3. | COD | mg/L | : | 45 | 125 | APHA 23rd Edition 5220 B |
| 4. | BOD (3 days at 27 °C) | mg/L | : | 13 | 15 | IS 3025 (Part 44) : 1993 |
| 5. | Oil & Grease | mg/L | : | <1 | 5 | APHA 23rd Edition 5520 B |
| 6. | Ammonia | mg/l | : | 3.76 | 15 | IS 3025 (PP 34): 1988 |
| 7. | Phenolic Compound | mg/L | : | <0.02 | 0.35 | APHA 23rd Edition 5530 D |
| 8. | Sulphide | mg/l | : | <0.5 | 0.5 | IS 3025 (Part – 29): 1986 |
| 9. | Phosphate | mg/L | : | 0.12 | 3 | APHA 23rd Edition 4500 P – C |
| 10. | Hexavalent Chromium | mg/L | : | <0.02 | 0.1 | APHA 23rd Edition 3500 Cr - B |
| 11. | Total Chromium | mg/L | : | <0.02 | 2.0 | APHA 23rd Edition 3500 Cr - B |
| 12. | Lead | mg/L | : | <0.02 | 0.1 | APHA 23rd Edition 3111 B |
| 13. | Mercury | mg/L | : | <0.01 | 0.01 | APHA 23rd Edition 3112-B |
| 14. | Zinc | mg/L | : | <0.03 | 5.0 | APHA 23rd Edition 3111 B |
| 15. | Nickel | mg/L | : | <0.02 | 1 | APHA 23rd Edition 3111 B |
| 16. | Copper | mg/L | : | <0.03 | 1 | APHA 23rd Edition 3111 B |
| 17. | Vanadium | mg/L | : | <0.002 | 0.2 | APHA 23rd Edition 3500-V B |

**Remark :**

**Authorised By -**

**Name : Sapana Amin** **Designation : Lab Incharge**

NOTE:
1) Reports may be reproduced, if required, but only in full and only with written approval of the laboratory.
2) Re analysis of sample will be done, if requested within 15 days from the date of Reporting of sample if the samples are not consumed during analysis.
3) The results reported above relate to the sample identified under Sample Details.

----------END OF REPORT----------

# Bharat Petroleum Corporation Limited (Bina Refinery)

Bina, Dist. Sagar – 470124, M.P.

# LDAR MONITORING SURVEY REPORT FOR VOC

## July 2023 To September 2023

Prepared by:

**Mahabal Enviro Engineers Pvt. Ltd.**

Plot Nos. 13,14,17,18, Grampanchayat Bokhara, 8 km from Nagpur City,
Opp. Patel Petrol Pump, Chhindwara Road, Koradi, Dist.Nagpur-441111

**Phone :** 91-712-2612162 **T/Fax:** 91-712-2612212 **Email:** nagpur@mahabal.com

# Mahabal Enviro Engineers Pvt. Ltd.

Engineers, Consultants, Environmental Monitoring Laboratory & Contractors
Plot Nos. 13,14,17,18, Grampanchayat Bokhara, 8 km from Nagpur City,
Opp. Patel Petrol Pump, Chhindwara Road, Koradi, Dist.Nagpur-441111
**Phone :** 91-712-2612162 **T/Fax:** 91-712-2612212 **Email:** nagpur@mahabal.com


Ref.: MEE/BPCL-V/2023-24/02

Date : 17th October, 2023

To,
**Bharat Petroleum Corporation Ltd.**
Bina,
Dist.: Sagar – 470124,
Madhya Pradesh

Kind Attn.: Mr. Anil Medhe (DGM - Environment)
Phone: 07580 22 6811
Email: medheat@bharatpetroleum.in

**Subject:** **LDAR Monitoring Survey Report for 'VOC' for the Quarter July 2023 to September 2023**

**Reference:** **Your Work Order No. 4509155006 dated 19.09.2022**

Dear Sir,

We are submitting the **LDAR Monitoring Report for 'VOC'** of the survey carried by us at your Bina Refinery works for the quarter under reference.

We hope that you will find the same in order.

Thanking you and assuring you of our best and prompt services at all times.

Yours faithfully,
**FOR MAHABAL ENVIRO ENGINEERS PVT. LTD.**

**Vivek Karippara**
**AUTHORIZED SIGNATORY**

☑ Enclosure: Report as above, 3 copies.



**Plot No. F-7, Road No. 21, MIDC Wagle Estate, Thane West - 400604, Maharashtra**
(600 m from Hotel Rukhmini Palace Turn Opp Toyota Show Room. Next to Ashida Electrical - near J B Sawant Bus Stop)
**Phone: 2582 0658/ 3139/ 1663/ 3154 Fax: 91-22-25823543 thane@mahabal.com**

# EXECUTIVE SUMMARY

## 1. INTRODUCTION

It is known that leaking equipment such as Valves, Pump Seals, Connectors are the largest source of emission of Volatile Organic Compound (VOC's) and Volatile Hazardous Air Pollutant from Petroleum Refineries. Volatile Organic Compounds (VOC's) are present in Crude Oil and the produced Petroleum fractions viz. LPG, Motor spirit, Kerosene, Naphtha, Benzene, Hexane, Cyclohexane, Fuel gas etc. Volatile Hydrocarbon Vapors get released to atmosphere from Storage, Pumping, Loading / Unloading and Processing of Crude & Petroleum products. However, Fugitive Emission (leakage to atmosphere) of VOC's usually occurs through Seals of equipment, wastewater collection & treatment facilities, cold vents, leakages etc.

## 2. PURPOSE

In general EPA has found significant wide spread with noncompliance with **Leak Detection And Repairing** (LDAR) Program regulation. It is mandatory and statutory requirement as per the Gazette Notification No. G.S.R. 186(E) dated 18th March, 2008 published by Ministry of Environment Forest & Climate change, Government of India and more specific Indian Chemicals Manufacturing Association (ICMA) has entered in a charter with Central Pollution Control Board (CPCB) for Corporate Responsibility on Environment Protection (CREP). As per this mutual agreement, industries handling VOCs will run LDAR program to control fugitive VOCs emissions.

**Bharat Petroleum Corporation Limited - Bina Refinery** retained the services of **Mahabal Enviro Engineers Pvt. Ltd.,** for undertaking the above monitoring for compliance to the Environment Clearance granted by Ministry of Environment, Forest & Climate change (MoEFCC) will implement this LDAR Program.

## Phases of LDAR program:

- Identifying potential fugitive emission sources in each process plant and offsite facilities.
- Monitoring identified fugitive emission sources within the refinery to detect VOC/Benzene leaks and tagging the detected leaking components.
- Repair or replacement of leaking components and recheck for VOC/Benzene leaks.

## 3. Instrument Used:

Referring US EPA Method 21 instrument used for detection VOC/Benzene. The Tiger Pho Check VOC detector is a revolutionary hand held PID instrument for rapid, accurate detection of volatile organic compounds (VOCs). Its photo-ionization detection (PID) capabilities utilize advanced patented Fence Electrode technology, a 3 electrode format with increased resistance to humidity and contamination.

| | | |
|---|---|---|
| **Manufacturer** | : | Ion Science Ltd, The Way, Fowlmere, Cambridge, UK. SG8 7UJ |
| **Product** | : | TIGER Pho check |
| **Product Description** | : | Intrinsically Safe, Photo-ionization Gas Detector for detecting Volatile Organic Compounds |
| **Range (ppm)** | : | 0.0 - 20,000 |

## 4. PROCEDURE FOR SCREENING

The procedures outlined in the EPA Reference Method 21 to screen each equipment type are as follows.

The probe inlet of Instrument is placed at the surface of the potential leak interface where leakage could occur. (The potential leak interface is the boundary between the process fluid and the atmosphere.) For equipment with no moving parts at the leak interface, the instrument probe should be placed directly on the leak interface; for equipment with moving parts (e.g. pumps, compressors, and agitators), the probe should be placed approximately 1 centimeter off from the leak interface. Due care must be taken to ensure that the instrument probe is held perpendicular, not tangential to the leak potential interface; otherwise, inaccurate readings will result. The instrument probe must then be moved along the interface periphery while observing the instrument readout. If an increased meter reading is observed, slowly move the probe along the interface where concentrations register until the maximum meter reading is obtained. The instrument probe inlet should be left at this maximum reading location for approximately two times the instrument response time. The maximum reading is recorded as the Screening Value. Screening Value for a different component is done by referring US EPA section 2.3.3 is described below:

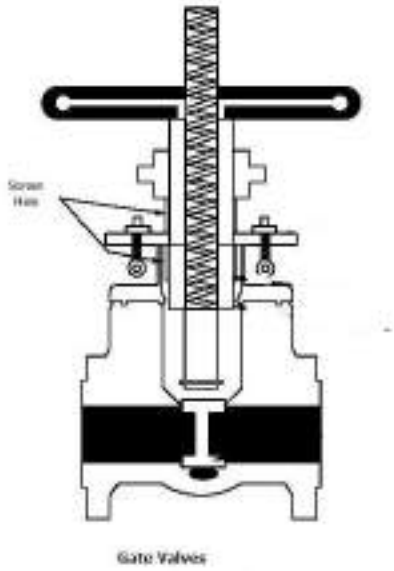


**Gate Valve**

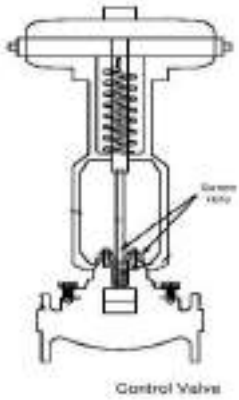


**Control Valve**

**PSV**

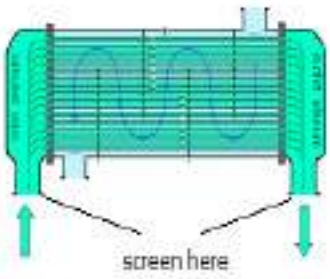


**Exchanger**

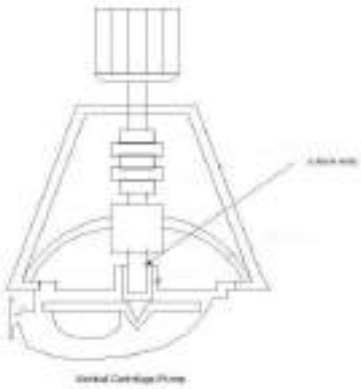

**Pump Seals**

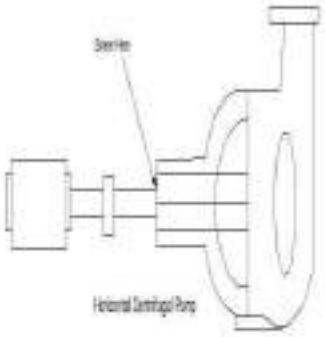

**Pump Seals**

## 5. VOC MONITORING:

| S. No. | COMPONENTS PROCESS UNITS | PUMP SEALS | PROCESS DRAINS | EXCHANGERS | PSV | PRV | LOCAL VENT | EV | COMPRESSORS | VRV | VALVE & FLANGES | TOTAL |
|---|---|---|---|---|---|---|---|---|---|---|---|---|
| 1 | OFFSITE | 44 | 0 | 0 | 21 | 4 | 11 | 4 | 0 | 5 | 170 | 259 |
| 2 | CDU/VDU | 116 | 0 | 67 | 70 | 0 | 1 | 0 | 0 | 0 | 390 | 644 |
| 3 | DCU | 66 | 0 | 34 | 37 | 0 | 0 | 0 | 2 | 0 | 256 | 395 |
| 4 | MS BLOCK | 110 | 0 | 67 | 163 | 0 | 0 | 0 | 9 | 0 | 297 | 646 |
| 5 | HCU/DHDT | 122 | 0 | 44 | 122 | 0 | 0 | 0 | 4 | 0 | 280 | 572 |
| 6 | HGU | 4 | 0 | 18 | 58 | 0 | 0 | 0 | 6 | 0 | 176 | 262 |
| 7 | SRB | 74 | 0 | 48 | 53 | 0 | 0 | 0 | 1 | 0 | 124 | 300 |
| 8 | BDT | 112 | 0 | 0 | 21 | 6 | 0 | 0 | 1 | 0 | 198 | 338 |
| 9 | KHDS | 48 | 0 | 16 | 35 | 0 | 0 | 0 | 2 | 0 | 170 | 271 |
| 10 | ETP | 4 | 0 | 0 | 0 | 2 | 1 | 0 | 0 | 0 | 0 | 7 |
| **TOTAL** | | **700** | **0** | **294** | **580** | **12** | **13** | **4** | **25** | **5** | **2061** | **3694** |

**Note: Others – Include any other component monitored**

## 6. Result and Discussion:

The observations found in LDAR VOC monitoring done for July 2023 to September 2023 are presented in subsequent pages.

# BHARAT PETROLEUM CORPORATION LIMITED, BINA-M.P.
## LDAR VOC MONITORING REPORT
## TOTAL VOC EMISSION SUMMARY JULY 2023 TO SEPTEMBER 2023

| TOTAL VOC EMISSION SUMMARY | | | | | | | | |
|---|---|---|---|---|---|---|---|---|
| S. No. | COMPONENT UNIT | PUMP SEALS | VALVES | PSV | EXCHANGER | OTHERS | TOTAL | |
| | | | | | | | kg/day | MT/Qtr. |
| 1 | MS BLOCK | 1.29405 | 0.48642 | 0.78084 | 0.28207 | 0.11877 | 2.96215 | 0.26956 |
| 2 | DCU | 0.77196 | 0.27757 | 0.11662 | 0.08944 | 0.02621 | 1.28180 | 0.11664 |
| 3 | HCU | 1.52015 | 0.35807 | 0.47493 | 0.16559 | 0.04235 | 2.56109 | 0.23306 |
| 4 | HGU | 0.05439 | 0.19122 | 0.19756 | 0.07241 | 0.05367 | 0.56925 | 0.05180 |
| 5 | OFFSITE | 0.52520 | 0.18675 | 0.07623 | - | 0.03679 | 0.82497 | 0.07507 |
| 6 | BDT | 1.58845 | 0.26085 | 0.08448 | - | 0.01965 | 1.95343 | 0.17776 |
| 7 | SRU | 0.94295 | 0.12801 | 0.18335 | 0.17580 | 0.02701 | 1.45712 | 0.13260 |
| 8 | CDU/VDU | 1.53172 | 0.47047 | 0.29217 | 0.24102 | 0.00111 | 2.53649 | 0.23082 |
| 9 | KHDS | 0.60243 | 0.30473 | 0.11787 | 0.05147 | 0.02059 | 1.09709 | 0.09984 |
| 10 | ETP | 0.04015 | - | - | - | 0.00690 | 0.04705 | 0.00428 |
| | TOTAL | 8.87145 | 2.66409 | 2.32405 | 1.07780 | 0.35305 | 15.29044 | 1.39143 |

Note: - 1) All values are in kg/day
2) Others – Include Compressors, Process drains, PRV, VRV, OWS MHO etc.

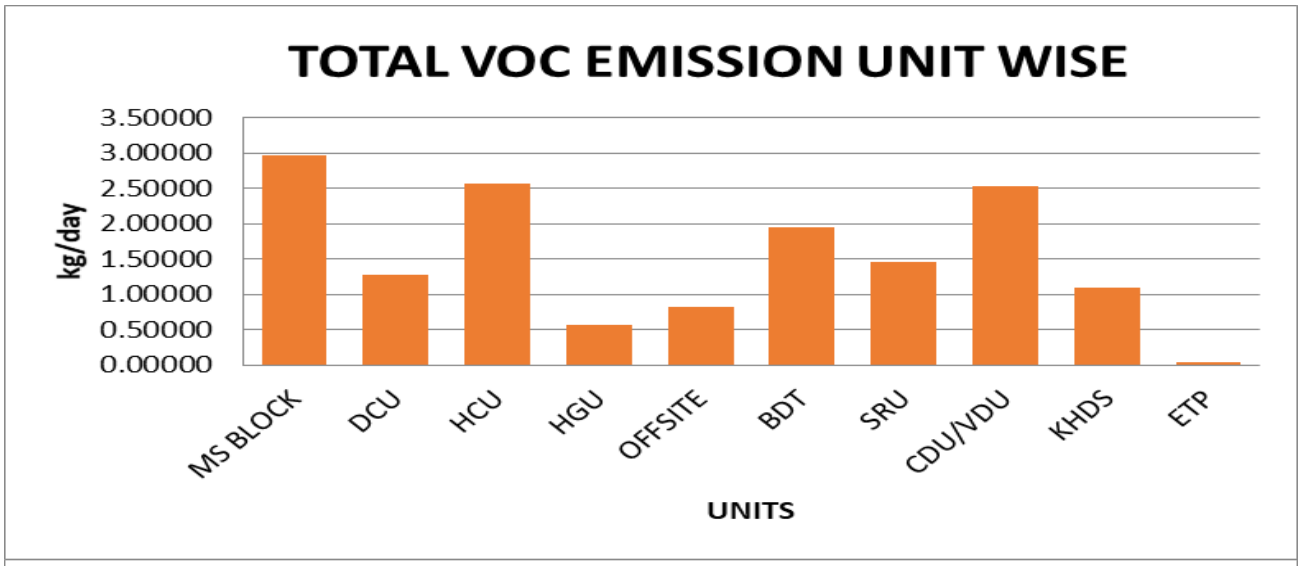


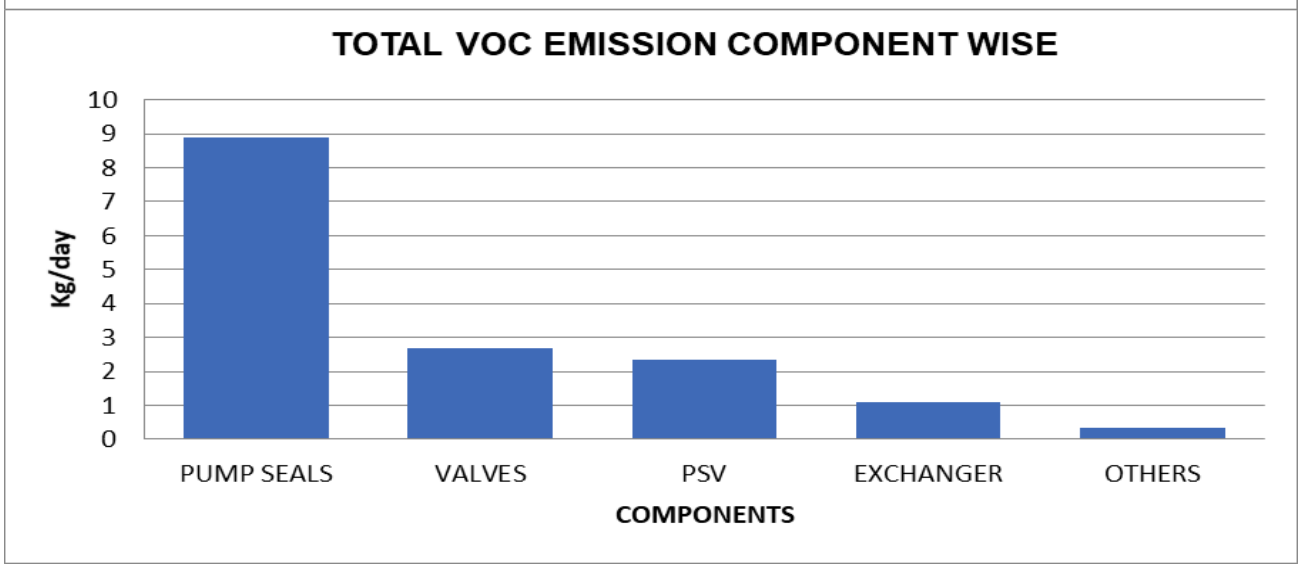

# BHARAT PETROLEUM CORPORATION LIMITED, BINA-M.P.
## LDAR VOC MONITORING REPORT
## TOTAL VOC SAVING SUMMARY JULY 2023 TO SEPTEMBER 2023

| TOTAL VOC SAVING SUMMARY | | | | | | | |
|---|---|---|---|---|---|---|---|
| S.No. | Unit | Component | Total No. of Leak Detected | Total Emission kg/day Before attending leak | Total Emission kg/day After attending leak | Total Saving | |
| | | | | | | Total Saving kg/day | Total Saving MT/Qtr. |
| 1 | MS Block | Valve | 6 | 0.15874 | 0.01500 | 0.14374 | 0.01308 |
| 2 | SRU | Valve | 0 | 0.00000 | 0.00000 | 0.00000 | 0.00000 |
| 3 | Off Site | Valve | 0 | 0.00000 | 0.00000 | 0.00000 | 0.00000 |
| 4 | DCU | Valve | 0 | 0.00000 | 0.00000 | 0.00000 | 0.00000 |
| 5 | CDU/VDU | Valve | 0 | 0.00000 | 0.00000 | 0.00000 | 0.00000 |
| 6 | HCU | Valve | 3 | 0.06962 | 0.00621 | 0.06341 | 0.00577 |
| | | PSV | 1 | 0.03400 | 0.00397 | 0.03003 | 0.00273 |
| 7 | ETP | Valve | 0 | 0.00000 | 0.00000 | 0.00000 | 0.00000 |
| 8 | BDT | Valve | 0 | 0.00000 | 0.00000 | 0.00000 | 0.00000 |
| 9 | KHDS | Valve | 6 | 0.14861 | 0.01787 | 0.13074 | 0.01190 |
| 10 | HGU | Valve | 0 | 0.00000 | 0.00000 | 0.00000 | 0.00000 |
| **TOTAL** | | | **16** | **0.41097** | **0.04305** | **0.36792** | **0.03348** |

**Note: - All values are in kg/day**

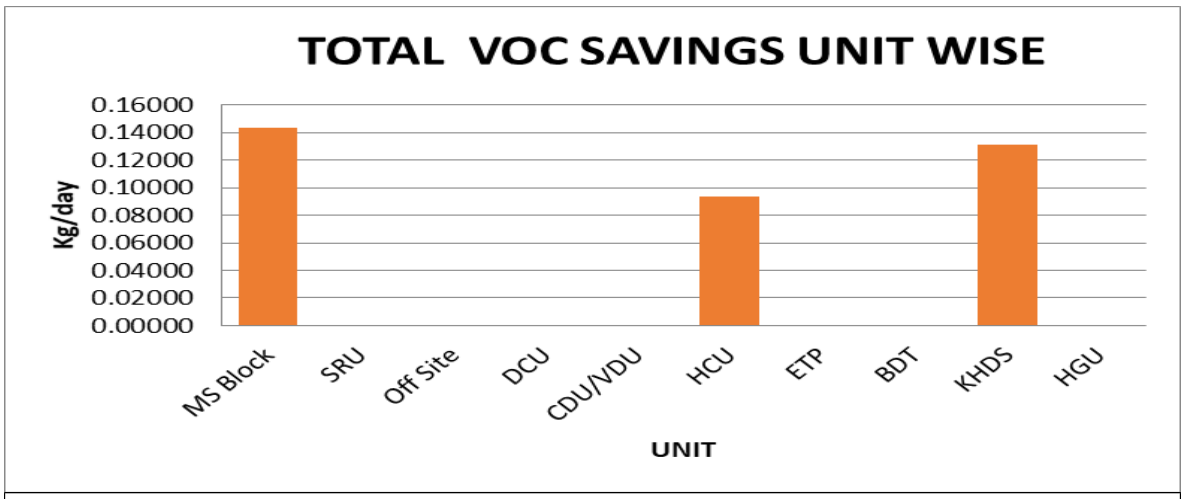


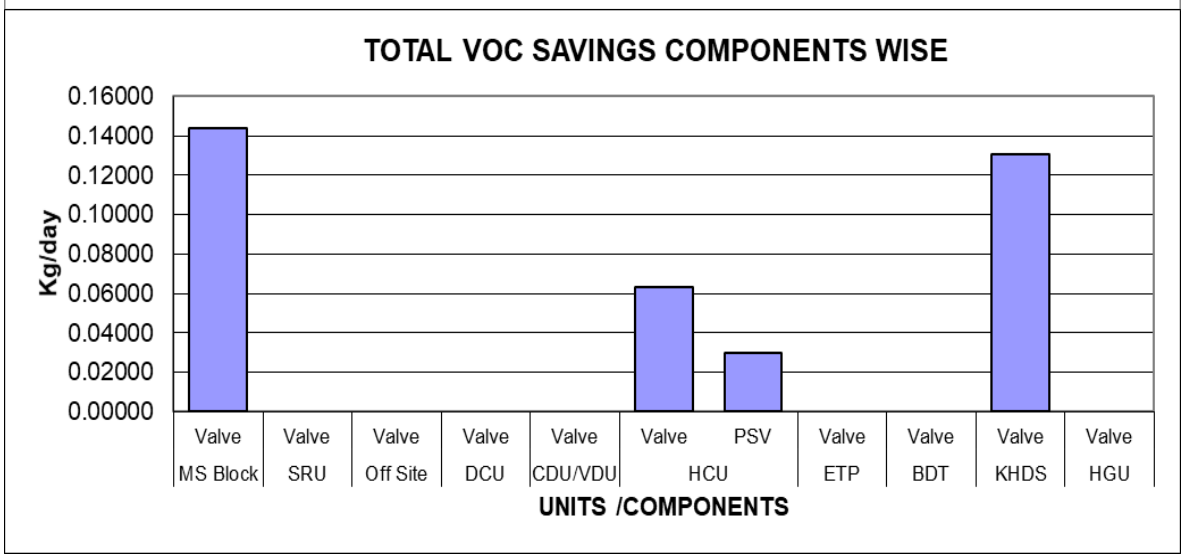

## BHARAT PETROLEUM CORPORATION LIMITED, BINA-M.P.

## LDAR VOC MONITORING SUMMARY REPORT FOR JULY 2023 TO SEPTEMBER 2023

| S.No. | Leak Date | Unit | Equipment | Tag. No. | Location | Component | Screening Value sv before attending leak | Estimated Emission Rate | Leak attending Date | Screening Value sv after attending leak | Estimated Emission Rate | Total Saving kg/day |
|---|---|---|---|---|---|---|---|---|---|---|---|---|
| | | | | | | | ppm | kg/day | | ppm | kg/day | |
| 1 | 17-08-2023 | MSB | Discharge Valve | 15-PA-CF-201 B | Gland | Valve | 3310.0 | 0.02322 | 11-09-2023 | 235.4 | 0.00323 | 0.01999 |
| 2 | 17-08-2023 | MSB | Discharge Valve | 20-PA-CF-102 B | Gland | Valve | 3275.0 | 0.02304 | 11-09-2023 | 75.1 | 0.00138 | 0.02166 |
| 3 | 17-08-2023 | MSB | Control Valve | 19-FV-2551 | Up Strm. I/V Gland | Valve | 5575.0 | 0.03426 | 11-09-2023 | 620.0 | 0.00666 | 0.02760 |
| 4 | 17-08-2023 | MSB | Control Valve | 15-FV-2701 | Up Strm. I/V Gland | Valve | 3771.0 | 0.02559 | 11-09-2023 | 110.5 | 0.00184 | 0.02375 |
| 5 | 17-08-2023 | MSB | Control Valve | 15-FV-3503 N | Down Strm. I/V Gland | Valve | 3320.0 | 0.02327 | 11-09-2023 | 71.4 | 0.00133 | 0.02194 |
| 6 | 17-08-2023 | MSB | Control Valve | 15-FV-3551 | Up Strm. I/V Gland | Valve | 4535.0 | 0.02937 | 11-09-2023 | 23.1 | 0.00057 | 0.02879 |
| 7 | 24-08-2023 | HCU | Control Valve | 16-FV-5802 | Gland | Valve | 3417.0 | 0.02378 | 01-09-2023 | 220.5 | 0.00308 | 0.02070 |
| 8 | 24-08-2023 | HCU | Control Valve | 16-PV-6601 | Gland | Valve | 3103.0 | 0.02213 | 01-09-2023 | 110.9 | 0.00184 | 0.02028 |
| 9 | 24-08-2023 | HCU | PSV | 16-PSV-5201 A | Inlet Flange | Valve | 5520.0 | 0.03400 | 01-09-2023 | 310.2 | 0.00397 | 0.03003 |
| 10 | 24-08-2023 | HCU | Control Valve | 16-PV-5803 | Gland | Valve | 3405.0 | 0.02371 | 01-09-2023 | 68.9 | 0.00129 | 0.02242 |
| 11 | 26-08-2023 | KHDS | Discharge Valve | 17-PA-CF-106 B | Gland | Valve | 3507.0 | 0.02424 | 05-09-2023 | 605.0 | 0.00653 | 0.01771 |
| 12 | 26-08-2023 | KHDS | Suction Valve | 17-PA-CF-106 A | Gland | Valve | 4250.0 | 0.02798 | 05-09-2023 | 101.5 | 0.00173 | 0.02625 |
| 13 | 26-08-2023 | KHDS | Control Valve | 17-FV-2201 B | Up Strm. I/V Gland | Valve | 3375.0 | 0.02356 | 05-09-2023 | 210.5 | 0.00297 | 0.02059 |
| 14 | 26-08-2023 | KHDS | Bypass Valve | 17-FV-2201 A | Gland | Valve | 3710.0 | 0.02528 | 05-09-2023 | 75.9 | 0.00139 | 0.02389 |
| 15 | 26-08-2023 | KHDS | Control Valve | 17-PV-3101 | Up Strm. I/V Gland | Valve | 3515.0 | 0.02428 | 05-09-2023 | 310.1 | 0.00397 | 0.02031 |
| 16 | 26-08-2023 | KHDS | Bypass Valve | 17-FV-1201 | Gland | Valve | 3320.0 | 0.02327 | 05-09-2023 | 68.2 | 0.00128 | 0.02199 |
| | | | | | | | | | | | **Total VOC Savings** | **0.36792** |

## BHARAT PETROLEUM CORPORATION LIMITED, BINA-M.P.

## LDAR VOC MONITORING % LEAK COMPONENT SUMMARY REPORT FOR JULY 2023 TO SEPTEMBER 2023

| S No. | Unit | Total No. of Components Monitored | Value 0<500 PPM | | Value 500<1000 PPM | | Value 1000<3000 PPM | | Value >= 3000 PPM | | Estimated Emission Above Leak Rate (Kg/day) |
|---|---|---|---|---|---|---|---|---|---|---|---|
| | | | No. | % | No. | % | No. | % | No. | % | |
| 1 | OFFSITE | 259 | 256 | 98.8 | 3 | 1.2 | 0 | 0.0 | 0 | 0.0 | 0.00000 |
| 2 | CDU/VDU | 644 | 629 | 97.7 | 15 | 2.3 | 0 | 0.0 | 0 | 0.0 | 0.00000 |
| 3 | DCU | 395 | 393 | 99.5 | 2 | 0.5 | 0 | 0.0 | 0 | 0.0 | 0.00000 |
| 4 | MS BLOCK | 646 | 615 | 95.2 | 25 | 3.9 | 0 | 0.0 | 6 | 0.9 | 0.15874 |
| 5 | HCU/DHDT | 572 | 557 | 97.4 | 11 | 1.9 | 0 | 0.0 | 4 | 0.7 | 0.10362 |
| 6 | HGU | 262 | 254 | 96.9 | 8 | 3.1 | 0 | 0.0 | 0 | 0.0 | 0.00000 |
| 7 | SRB | 300 | 297 | 99.0 | 3 | 1.0 | 0 | 0.0 | 0 | 0.0 | 0.00000 |
| 8 | BDT | 338 | 332 | 98.2 | 6 | 1.8 | 0 | 0.0 | 0 | 0.0 | 0.00000 |
| 9 | KHDS | 271 | 263 | 97.0 | 2 | 0.7 | 0 | 0.0 | 6 | 2.2 | 0.14861 |
| 10 | ETP | 7 | 7 | 100.0 | 0 | 0.0 | 0 | 0.0 | 0 | 0.0 | 0.00000 |

**Note:** Total No. of components include all components monitored in this quarter except OWS MHO, Process drains.
The % leak Components definition is detection of VOC concentration more than the values (in ppm) specified below at the emission source using a hydrocarbon analyzer as described in MoEF Guide line **Dated 18th March, 2008 GSR186 (E).**

| Component | General Hydrocarbon (PPM) |
|---|---|
| Pump/Compressor | 5000 |
| Valves/Flanges | 3000 |
| Other Components | 3000 |

# LDAR VOC MONTHLY MONITORING

## MONTH – AUGUST 2023

.

# BHARAT PETROLEUM CORPORATION LIMITED, BINA-M.P.
## LDAR REPORT FOR THE MONTH OF AUGUST 2023
### Monitoring - VOC Plant – BDT

| S.No. | Date | Tag. No. | Equipment | Components | Line size (inch) | Location | Screening Value sv (ppm) | Estimated Emission Rate kg/day |
|---|---|---|---|---|---|---|---|---|
| 1 | 29-08-2023 | 70-PA-CF-13 D | Seal | Pump Seals | - | Pump Seal | 74.1 | 0.01669 |
| 2 | 29-08-2023 | 70-PA-CF-13 C | Seal | Pump Seals | - | Pump Seal | 23.6 | 0.00830 |
| 3 | 29-08-2023 | 70-PA-CF-13 B | Seal | Pump Seals | - | Pump Seal | 155.2 | 0.02620 |
| 4 | 29-08-2023 | 70-PA-CF-13 A | Seal | Pump Seals | - | Pump Seal | 93.4 | 0.01922 |
| 5 | 29-08-2023 | 70-PA-CF-9 C | Seal | Pump Seals | - | Pump Seal | 5.6 | 0.00345 |
| 6 | 29-08-2023 | 70-PA-CF-9 B | Seal | Pump Seals | - | Pump Seal | 30.2 | 0.00965 |
| 7 | 29-08-2023 | 70-PA-CF-9 A | Seal | Pump Seals | - | Pump Seal | 143.2 | 0.02494 |
| 8 | 29-08-2023 | 70-PA-CF-3 B | Seal | Pump Seals | - | Pump Seal | 80.4 | 0.01754 |
| 9 | 29-08-2023 | 70-PA-CF-3 A | Seal | Pump Seals | - | Pump Seal | 93.7 | 0.01925 |
| 10 | 29-08-2023 | 70-PA-CF-11 C | Seal | Pump Seals | - | Pump Seal | 26.4 | 0.00889 |
| 11 | 29-08-2023 | 70-PA-CF-11 B | Seal | Pump Seals | - | Pump Seal | 13.2 | 0.00583 |
| 12 | 29-08-2023 | 70-PA-CF-11 A | Seal | Pump Seals | - | Pump Seal | 80.9 | 0.01760 |
| 13 | 29-08-2023 | 70-PA-CF-10 A | Seal | Pump Seals | - | Pump Seal | 91.4 | 0.01897 |
| 14 | 29-08-2023 | 70-PA-CF-10 B | Seal | Pump Seals | - | Pump Seal | 63.5 | 0.01519 |
| 15 | 29-08-2023 | 70-PA-CF-10 C | Seal | Pump Seals | - | Pump Seal | 23.8 | 0.00835 |
| 16 | 29-08-2023 | 70-PA-CF-4 A | Seal | Pump Seals | - | Pump Seal | 70.6 | 0.01620 |
| 17 | 29-08-2023 | 70-PA-CF-4 B | Seal | Pump Seals | - | Pump Seal | 35.4 | 0.01063 |
| 18 | 29-08-2023 | 70-PA-CF-4 C | Seal | Pump Seals | - | Pump Seal | 2.6 | 0.00216 |
| 19 | 29-08-2023 | 70-PA-CF-4 D | Seal | Pump Seals | - | Pump Seal | 43.1 | 0.01199 |
| 20 | 29-08-2023 | 70-PA-CF-4 E | Seal | Pump Seals | - | Pump Seal | 30.6 | 0.00973 |
| 21 | 29-08-2023 | 70-PA-CF-12 A | Seal | Pump Seals | - | Pump Seal | 93.8 | 0.01927 |
| 22 | 29-08-2023 | 70-PA-CF-12 B | Seal | Pump Seals | - | Pump Seal | 70.1 | 0.01613 |
| 23 | 29-08-2023 | 70-PA-CF-12 C | Seal | Pump Seals | - | Pump Seal | 23.6 | 0.00830 |
| 24 | 29-08-2023 | 70-PA-CF-12 D | Seal | Pump Seals | - | Pump Seal | 63.3 | 0.01516 |
| 25 | 29-08-2023 | 70-PA-CF-12 E | Seal | Pump Seals | - | Pump Seal | 125.4 | 0.02300 |
| 26 | 29-08-2023 | 70-PA-CF-8 C | Seal | Pump Seals | - | Pump Seal | 63.1 | 0.01513 |
| 27 | 29-08-2023 | 70-PA-CF-8 B | Seal | Pump Seals | - | Pump Seal | 20.8 | 0.00769 |
| 28 | 29-08-2023 | 70-PA-CF-8 A | Seal | Pump Seals | - | Pump Seal | 79.6 | 0.01743 |
| 29 | 29-08-2023 | 70-PA-CF-2 E | Seal | Pump Seals | - | Pump Seal | 36.3 | 0.01080 |
| 30 | 29-08-2023 | 70-PA-CF-2 D | Seal | Pump Seals | - | Pump Seal | 30.4 | 0.00969 |
| 31 | 29-08-2023 | 70-PA-CF-2 C | Seal | Pump Seals | - | Pump Seal | 143.2 | 0.02494 |
| 32 | 29-08-2023 | 70-PA-CF-2 B | Seal | Pump Seals | - | Pump Seal | 63.1 | 0.01513 |
| 33 | 29-08-2023 | 70-PA-CF-2 A | Seal | Pump Seals | - | Pump Seal | 20.7 | 0.00767 |
| 34 | 29-08-2023 | 70-PA-CF-6 E | Seal | Pump Seals | - | Pump Seal | 89.9 | 0.01877 |
| 35 | 29-08-2023 | 70-PA-CF-6 D | Seal | Pump Seals | - | Pump Seal | 3.6 | 0.00264 |
| 36 | 29-08-2023 | 70-PA-CF-6 C | Seal | Pump Seals | - | Pump Seal | 20.5 | 0.00762 |
| 37 | 29-08-2023 | 70-PA-CF-6 B | Seal | Pump Seals | - | Pump Seal | 63.4 | 0.01517 |
| 38 | 29-08-2023 | 70-PA-CF-6 A | Seal | Pump Seals | - | Pump Seal | 12.8 | 0.00572 |
| 39 | 29-08-2023 | 70-PA-CF-7 A | Seal | Pump Seals | - | Pump Seal | 614.5 | 0.06064 |
| 40 | 29-08-2023 | 70-PA-CF-7 B | Seal | Pump Seals | - | Pump Seal | 23.1 | 0.00820 |
| 41 | 29-08-2023 | 70-PA-CF-1 A | Seal | Pump Seals | - | Pump Seal | 20.7 | 0.00767 |
| 42 | 29-08-2023 | 70-PA-CF-1 B | Seal | Pump Seals | - | Pump Seal | 89.6 | 0.01874 |
| 43 | 29-08-2023 | 70-PA-CF-1 C | Seal | Pump Seals | - | Pump Seal | 5.5 | 0.00342 |
| 44 | 29-08-2023 | 70-PA-CF-5 A | Seal | Pump Seals | - | Pump Seal | 13.4 | 0.00588 |
| 45 | 29-08-2023 | 70-PA-CF-5 B | Seal | Pump Seals | - | Pump Seal | 26.4 | 0.00889 |
| 46 | 29-08-2023 | 70-PA-CF-5 C | Seal | Pump Seals | - | Pump Seal | 30.9 | 0.00979 |
| 47 | 29-08-2023 | 70-PA-CF-14 A | Seal | Pump Seals | - | Pump Seal | 63.8 | 0.01523 |
| 48 | 29-08-2023 | 70-PA-CF-14 B | Seal | Pump Seals | - | Pump Seal | 32.7 | 0.01013 |
| 49 | 29-08-2023 | 70-PA-CF-23 | Seal | Pump Seals | - | Pump Seal | 90.4 | 0.01884 |
| 50 | 29-08-2023 | 70-PA-CF-24 | Seal | Pump Seals | - | Pump Seal | 13.2 | 0.00583 |
| 51 | 29-08-2023 | 70-PA-CF-25 | Seal | Pump Seals | - | Pump Seal | 62.3 | 0.01501 |
| 52 | 29-08-2023 | 70-PA-CF-26 | Seal | Pump Seals | - | Pump Seal | 33.6 | 0.01030 |

# BHARAT PETROLEUM CORPORATION LIMITED, BINA-M.P.
## LDAR REPORT FOR THE MONTH OF AUGUST 2023

**Monitoring - VOC** **Plant – BDT**

| S.No. | Date | Tag. No. | Equipment | Components | Line size (inch) | Location | Screening Value sv (ppm) | Estimated Emission Rate kg/day |
|---|---|---|---|---|---|---|---|---|
| 53 | 29-08-2023 | 70-PA-CF-16 | Seal | Pump Seals | - | Pump Seal | 125.3 | 0.02299 |
| 54 | 29-08-2023 | 70-PA-CF-15 A | Seal | Pump Seals | - | Pump Seal | 20.6 | 0.00764 |
| 55 | 29-08-2023 | 70-PA-CF-15 B | Seal | Pump Seals | - | Pump Seal | 13.2 | 0.00583 |
| 56 | 29-08-2023 | 70-PA-CF-15 C | Seal | Pump Seals | - | Pump Seal | 6.5 | 0.00378 |
| **Total VOC Emission fom Pump Seals** | | | | | | | | **0.74981** |

**Total VOC Emission from BDT in August 2023 is 0.74981 kg/day**

# BHARAT PETROLEUM CORPORATION LIMITED, BINA-M.P.
## LDAR REPORT FOR THE MONTH OF AUGUST 2023
**Monitoring - VOC** **Plant – HCU / DHDT**

| S.No. | Date | Tag. No. | Equipment | Components | Line size (inch) | Location | Screening Value sv (ppm) | Estimated Emission Rate kg/day |
|---|---|---|---|---|---|---|---|---|
| 1 | 24-08-2023 | 16-PA-CF-605 B | Seal | Pump Seals | - | Pump Seal | 156.2 | 0.02630 |
| 2 | 24-08-2023 | 16-PA-CF-605 A | Seal | Pump Seals | - | Pump Seal | 36.2 | 0.01078 |
| 3 | 24-08-2023 | 16-PA-CF-606 B | Seal | Pump Seals | - | Pump Seal | 13.5 | 0.00591 |
| 4 | 24-08-2023 | 16-PA-CF-606 A | Seal | Pump Seals | - | Pump Seal | 62.4 | 0.01503 |
| 5 | 24-08-2023 | 16-PA-CF-603 B | Seal | Pump Seals | - | Pump Seal | 20.6 | 0.00764 |
| 6 | 24-08-2023 | 16-PA-CF-603 A | Seal | Pump Seals | - | Pump Seal | 23.1 | 0.00820 |
| 7 | 24-08-2023 | 16-PA-CF-1602 B | Seal | Pump Seals | - | Pump Seal | 122.5 | 0.02267 |
| 8 | 24-08-2023 | 16-PA-CF-1602 A | Seal | Pump Seals | - | Pump Seal | 63.5 | 0.01519 |
| 9 | 24-08-2023 | 16-PA-CF-601 A | Seal | Pump Seals | - | Pump Seal | 60.1 | 0.01469 |
| 10 | 24-08-2023 | 16-PA-CF-601 B | Seal | Pump Seals | - | Pump Seal | 23.8 | 0.00835 |
| 11 | 24-08-2023 | 16-PA-CF-608 A | Seal | Pump Seals | - | Pump Seal | 93.4 | 0.01922 |
| 12 | 24-08-2023 | 16-PA-CF-608 B | Seal | Pump Seals | - | Pump Seal | 15.2 | 0.00635 |
| 13 | 24-08-2023 | 16-PA-CF-602 A | Seal | Pump Seals | - | Pump Seal | 62.5 | 0.01504 |
| 14 | 24-08-2023 | 16-PA-CF-602 B | Seal | Pump Seals | - | Pump Seal | 80.4 | 0.01754 |
| 15 | 24-08-2023 | 16-PA-CF-810 A | Seal | Pump Seals | - | Pump Seal | 13.5 | 0.00591 |
| 16 | 24-08-2023 | 16-PA-CF-810 B | Seal | Pump Seals | - | Pump Seal | 62.1 | 0.01498 |
| 17 | 24-08-2023 | 16-PA-CF-701 A | Seal | Pump Seals | - | Pump Seal | 23.5 | 0.00828 |
| 18 | 24-08-2023 | 16-PA-CF-701 B | Seal | Pump Seals | - | Pump Seal | 90.4 | 0.01884 |
| 19 | 24-08-2023 | 16-PA-CF-501 A | Seal | Pump Seals | - | Pump Seal | 23.6 | 0.00830 |
| 20 | 24-08-2023 | 16-PA-CF-501 B | Seal | Pump Seals | - | Pump Seal | 80.1 | 0.01750 |
| 21 | 24-08-2023 | 16-PA-CF-505 A | Seal | Pump Seals | - | Pump Seal | 23.6 | 0.00830 |
| 22 | 24-08-2023 | 16-PA-CF-505 B | Seal | Pump Seals | - | Pump Seal | 66.5 | 0.01562 |
| 23 | 24-08-2023 | 16-PA-CF-508 A | Seal | Pump Seals | - | Pump Seal | 122.2 | 0.02264 |
| 24 | 24-08-2023 | 16-PA-CF-508 B | Seal | Pump Seals | - | Pump Seal | 36.5 | 0.01083 |
| 25 | 24-08-2023 | 16-PA-CF-507 A | Seal | Pump Seals | - | Pump Seal | 6.4 | 0.00375 |
| 26 | 24-08-2023 | 16-PA-CF-507 B | Seal | Pump Seals | - | Pump Seal | 23.5 | 0.00828 |
| 27 | 24-08-2023 | 16-PA-CF-705 A | Seal | Pump Seals | - | Pump Seal | 5.2 | 0.00330 |
| 28 | 24-08-2023 | 16-PA-CF-705 B | Seal | Pump Seals | - | Pump Seal | 36.2 | 0.01078 |
| 29 | 24-08-2023 | 16-PA-CF-502 A | Seal | Pump Seals | - | Pump Seal | 13.5 | 0.00591 |
| 30 | 24-08-2023 | 16-PA-CF-502 B | Seal | Pump Seals | - | Pump Seal | 26.5 | 0.00891 |
| 31 | 24-08-2023 | 16-PA-CF-506 A | Seal | Pump Seals | - | Pump Seal | 166.5 | 0.02734 |
| 32 | 24-08-2023 | 16-PA-CF-506 B | Seal | Pump Seals | - | Pump Seal | 23.4 | 0.00826 |
| 33 | 24-08-2023 | 16-PA-CF-504 A | Seal | Pump Seals | - | Pump Seal | 20.3 | 0.00757 |
| 34 | 24-08-2023 | 16-PA-CF-504 B | Seal | Pump Seals | - | Pump Seal | 13.5 | 0.00591 |
| 35 | 24-08-2023 | 16-PA-CF-503 A | Seal | Pump Seals | - | Pump Seal | 6.2 | 0.00367 |
| 36 | 24-08-2023 | 16-PA-CF-503 B | Seal | Pump Seals | - | Pump Seal | 46.2 | 0.01251 |
| 37 | 24-08-2023 | 16-PA-CF-703 B | Seal | Pump Seals | - | Pump Seal | 136.5 | 0.02422 |
| 38 | 24-08-2023 | 16-PA-CF-703 A | Seal | Pump Seals | - | Pump Seal | 93.1 | 0.01918 |
| 39 | 24-08-2023 | 16-PA-CF-702 B | Seal | Pump Seals | - | Pump Seal | 20.5 | 0.00762 |
| 40 | 24-08-2023 | 16-PA-CF-702 A | Seal | Pump Seals | - | Pump Seal | 6.5 | 0.00378 |
| 41 | 24-08-2023 | 16-PA-CF-704 B | Seal | Pump Seals | - | Pump Seal | 23.1 | 0.00820 |
| 42 | 24-08-2023 | 16-PA-CF-704 A | Seal | Pump Seals | - | Pump Seal | 260.2 | 0.03590 |

# BHARAT PETROLEUM CORPORATION LIMITED, BINA-M.P.
## LDAR REPORT FOR THE MONTH OF AUGUST 2023

**Monitoring - VOC** **Plant – HCU / DHDT**

| S.No. | Date | Tag. No. | Equipment | Components | Line size (inch) | Location | Screening Value sv (ppm) | Estimated Emission Rate kg/day |
|---|---|---|---|---|---|---|---|---|
| 43 | 24-08-2023 | 16-PA-CF-812 A | Seal | Pump Seals | - | Pump Seal | 36.5 | 0.01083 |
| 44 | 24-08-2023 | 16-PA-CF-812 B | Seal | Pump Seals | - | Pump Seal | 46.1 | 0.01249 |
| 45 | 24-08-2023 | 16-PA-CF-201 A | Seal | Pump Seals | - | Pump Seal | 52.1 | 0.01346 |
| 46 | 24-08-2023 | 16-PA-CF-201 B | Seal | Pump Seals | - | Pump Seal | 26.2 | 0.00885 |
| 47 | 24-08-2023 | 16-PA-CF-101 | Seal | Pump Seals | - | Pump Seal | 66.5 | 0.01562 |
| 48 | 24-08-2023 | 16-PA-CF-301 B | Seal | Pump Seals | - | Pump Seal | 23.1 | 0.00820 |
| 49 | 24-08-2023 | 16-PA-CF-301 A | Seal | Pump Seals | - | Pump Seal | 40.5 | 0.01154 |
| 50 | 24-08-2023 | 16-PA-CF-402 A | Seal | Pump Seals | - | Pump Seal | 93.4 | 0.01922 |
| 51 | 24-08-2023 | 16-PA-CF-402 B | Seal | Pump Seals | - | Pump Seal | 15.6 | 0.00645 |
| 52 | 24-08-2023 | 16-PA-CF-102 A | Seal | Pump Seals | - | Pump Seal | 23.8 | 0.00835 |
| 53 | 24-08-2023 | 16-PA-CF-102 B | Seal | Pump Seals | - | Pump Seal | 93.1 | 0.01918 |
| 54 | 24-08-2023 | 16-PA-CF-405 | Seal | Pump Seals | - | Pump Seal | 20.6 | 0.00764 |
| 55 | 24-08-2023 | 16-PA-CF-612 A | Seal | Pump Seals | - | Pump Seal | 53.1 | 0.01362 |
| 56 | 24-08-2023 | 16-PA CF-1603 | Seal | Pump Seals | - | Pump Seal | 20.5 | 0.00762 |
| 57 | 24-08-2023 | 16-PA CF-1601 | Seal | Pump Seals | - | Pump Seal | 23.6 | 0.00830 |
| 58 | 24-08-2023 | 16-PA CF-1101 A | Seal | Pump Seals | - | Pump Seal | 6.4 | 0.00375 |
| 59 | 24-08-2023 | 16-PA CF-1101 B | Seal | Pump Seals | - | Pump Seal | 30.6 | 0.00973 |
| 60 | 24-08-2023 | 16-PA-CF-509 B (N) | Seal | Pump Seals | - | Pump Seal | 93.1 | 0.01918 |
| 61 | 24-08-2023 | 16-PA-CF-101 A (N) | Seal | Pump Seals | - | Pump Seal | 20.5 | 0.00762 |
| **Total VOC Emission from Pump Seals** | | | | | | | | **0.74083** |

**Total VOC Emission from HCU in August 2023 is 0.74083 kg/day**

# BHARAT PETROLEUM CORPORATION LIMITED, BINA-M.P.
## LDAR REPORT FOR THE MONTH OF AUGUST 2023
### Monitoring - VOC Plant – CDU / VDU

| S.No. | Date | Tag. No. | Equipment | Components | Line size (inch) | Location | Screening Value sv (ppm) | Estimated Emission Rate kg/day |
|---|---|---|---|---|---|---|---|---|
| 1 | 14-08-2023 | 11-PA-CF-101 A | Seal | Pump Seals | - | Pump Seal | 39.5 | 0.01137 |
| 2 | 14-08-2023 | 11-PA-CF-101 B | Seal | Pump Seals | - | Pump Seal | 122.5 | 0.02267 |
| 3 | 14-08-2023 | 13-PA-CF-102 A | Seal | Pump Seals | - | Pump Seal | 67.4 | 0.01575 |
| 4 | 14-08-2023 | 13-PA-CF-102 B | Seal | Pump Seals | - | Pump Seal | 99.2 | 0.01994 |
| 5 | 14-08-2023 | 13-PA-CF-101 A | Seal | Pump Seals | - | Pump Seal | 156.4 | 0.02632 |
| 6 | 14-08-2023 | 13-PA-CF-101 B | Seal | Pump Seals | - | Pump Seal | 20.6 | 0.00764 |
| 7 | 14-08-2023 | 12-PA-CF-108-A | Seal | Pump Seals | - | Pump Seal | 88.3 | 0.01857 |
| 8 | 14-08-2023 | 12-PA-CF-108-B | Seal | Pump Seals | - | Pump Seal | 6.3 | 0.00371 |
| 9 | 14-08-2023 | 12-PA-CF-104-A | Seal | Pump Seals | - | Pump Seal | 151.7 | 0.02583 |
| 10 | 14-08-2023 | 12-PA-CF-104-B | Seal | Pump Seals | - | Pump Seal | 8.1 | 0.00432 |
| 11 | 14-08-2023 | 11-PA-CF-113 A | Seal | Pump Seals | - | Pump Seal | 26.5 | 0.00891 |
| 12 | 14-08-2023 | 11-PA-CF-113 B | Seal | Pump Seals | - | Pump Seal | 3.1 | 0.00241 |
| 13 | 14-08-2023 | 11-PA-CF-112 A | Seal | Pump Seals | - | Pump Seal | 42.2 | 0.01184 |
| 14 | 14-08-2023 | 11-PA-CF-112 B | Seal | Pump Seals | - | Pump Seal | 30.4 | 0.00969 |
| 15 | 14-08-2023 | 11-PA-CF-128 A | Seal | Pump Seals | - | Pump Seal | 63.2 | 0.01514 |
| 16 | 14-08-2023 | 11-PA-CF-128 B | Seal | Pump Seals | - | Pump Seal | 13.4 | 0.00588 |
| 17 | 14-08-2023 | 11-PA-CF-111 A | Seal | Pump Seals | - | Pump Seal | 73.1 | 0.01655 |
| 18 | 14-08-2023 | 11-PA-CF-111 B | Seal | Pump Seals | - | Pump Seal | 256.8 | 0.03561 |
| 19 | 14-08-2023 | 11-PA-CF-108 A | Seal | Pump Seals | - | Pump Seal | 93.1 | 0.01918 |
| 20 | 14-08-2023 | 11-PA-CF-108 B | Seal | Pump Seals | - | Pump Seal | 40.7 | 0.01158 |
| 21 | 14-08-2023 | 11-PA-CF-105 A | Seal | Pump Seals | - | Pump Seal | 23.4 | 0.00826 |
| 22 | 14-08-2023 | 11-PA-CF-105 B | Seal | Pump Seals | - | Pump Seal | 88.3 | 0.01857 |
| 23 | 14-08-2023 | 12-PA-CF-104 A | Seal | Pump Seals | - | Pump Seal | 63.1 | 0.01513 |
| 24 | 14-08-2023 | 12-PA-CF-104 B | Seal | Pump Seals | - | Pump Seal | 20.1 | 0.00753 |
| 25 | 14-08-2023 | 12-PA-CF-102 A | Seal | Pump Seals | - | Pump Seal | 193.1 | 0.02993 |
| 26 | 14-08-2023 | 12-PA-CF-102 B | Seal | Pump Seals | - | Pump Seal | 2.4 | 0.00206 |
| 27 | 14-08-2023 | 12-PA-CF-112 A | Seal | Pump Seals | - | Pump Seal | 44.3 | 0.01219 |
| 28 | 14-08-2023 | 12-PA-CF-112 B | Seal | Pump Seals | - | Pump Seal | 180.4 | 0.02871 |
| 29 | 14-08-2023 | 12-PA-CF-109 A | Seal | Pump Seals | - | Pump Seal | 93.6 | 0.01924 |
| 30 | 14-08-2023 | 12-PA-CF-109 B | Seal | Pump Seals | - | Pump Seal | 43.2 | 0.01201 |
| 31 | 14-08-2023 | 12-PA-CF-101 A | Seal | Pump Seals | - | Pump Seal | 20.7 | 0.00767 |
| 32 | 14-08-2023 | 12-PA-CF-101 B | Seal | Pump Seals | - | Pump Seal | 44.8 | 0.01228 |
| 33 | 14-08-2023 | 11-PA-CF-103 A | Seal | Pump Seals | - | Pump Seal | 96.1 | 0.01955 |
| 34 | 14-08-2023 | 11-PA-CF-103 B | Seal | Pump Seals | - | Pump Seal | 26.3 | 0.00887 |
| 35 | 14-08-2023 | 11-PA-CF-106 A | Seal | Pump Seals | - | Pump Seal | 31.5 | 0.00990 |
| 36 | 14-08-2023 | 11-PA-CF-106 B | Seal | Pump Seals | - | Pump Seal | 75.2 | 0.01684 |
| 37 | 14-08-2023 | 11-PA-CF-107 A | Seal | Pump Seals | - | Pump Seal | 15.4 | 0.00640 |
| 38 | 14-08-2023 | 11-PA-CF-107 B | Seal | Pump Seals | - | Pump Seal | 23.4 | 0.00826 |
| 39 | 14-08-2023 | 11-PA-CF-109 A | Seal | Pump Seals | - | Pump Seal | 214.3 | 0.03189 |
| 40 | 14-08-2023 | 11-PA-CF-109 B | Seal | Pump Seals | - | Pump Seal | 93.4 | 0.01922 |
| 41 | 14-08-2023 | 12-PA-CF-110 A | Seal | Pump Seals | - | Pump Seal | 20.3 | 0.00757 |
| 42 | 14-08-2023 | 12-PA-CF-110 B | Seal | Pump Seals | - | Pump Seal | 56.4 | 0.01413 |
| 43 | 14-08-2023 | 11-PA-CF-1001 A | Seal | Pump Seals | - | Pump Seal | 89.3 | 0.01870 |
| 44 | 14-08-2023 | 11-PA-CF-1001 B | Seal | Pump Seals | - | Pump Seal | 36.1 | 0.01076 |
| 45 | 14-08-2023 | 12-PA-CF-113 C | Seal | Pump Seals | - | Pump Seal | 21.7 | 0.00789 |

# BHARAT PETROLEUM CORPORATION LIMITED, BINA-M.P.
## LDAR REPORT FOR THE MONTH OF AUGUST 2023

**Monitoring - VOC** **Plant – CDU / VDU**

| S.No. | Date | Tag. No. | Equipment | Components | Line size (inch) | Location | Screening Value sv (ppm) | Estimated Emission Rate kg/day |
|---|---|---|---|---|---|---|---|---|
| 46 | 14-08-2023 | 12-PA-CF-1002 A | Seal | Pump Seals | - | Pump Seal | 73.1 | 0.01655 |
| 47 | 14-08-2023 | 12-PA-CF-1002 B | Seal | Pump Seals | - | Pump Seal | 23.5 | 0.00828 |
| 48 | 14-08-2023 | 11-PA-CF-1002 A | Seal | Pump Seals | - | Pump Seal | 63.1 | 0.01513 |
| 49 | 14-08-2023 | 11-PA-CF-1002 B | Seal | Pump Seals | - | Pump Seal | 20.3 | 0.00757 |
| 50 | 14-08-2023 | 11-PA-CF-1002 C | Seal | Pump Seals | - | Pump Seal | 98.6 | 0.01986 |
| 51 | 14-08-2023 | 21-PA-CF-1001 A | Seal | Pump Seals | - | Pump Seal | 346.5 | 0.04276 |
| 52 | 14-08-2023 | 21-PA-CF-1001 B | Seal | Pump Seals | - | Pump Seal | 12.5 | 0.00564 |
| 53 | 14-08-2023 | 21-PA-CF-1003 A | Seal | Pump Seals | - | Pump Seal | 76.4 | 0.01700 |
| 54 | 14-08-2023 | 21-PA-CF-1003 B | Seal | Pump Seals | - | Pump Seal | 26.5 | 0.00891 |
| 55 | 14-08-2023 | 21-PA-CF-1002 A | Seal | Pump Seals | - | Pump Seal | 36.3 | 0.01080 |
| 56 | 14-08-2023 | 21-PA-CF-1002 B | Seal | Pump Seals | - | Pump Seal | 80.1 | 0.01750 |
| 57 | 14-08-2023 | 24-PA-MT-1001 A | Seal | Pump Seals | - | Pump Seal | 23.6 | 0.00830 |
| 58 | 14-08-2023 | 24-PA-MT-1001 B | Seal | Pump Seals | - | Pump Seal | 66.5 | 0.01562 |
| **Total VOC Emission from Pump Seals** | | | | | | | | **0.84040** |

**Total VOC emission from CDU/VDU in August 2023 is 0.84040 Kg/day**

# BHARAT PETROLEUM CORPORATION LIMITED, BINA-M.P.
## LDAR REPORT FOR THE MONTH OF AUGUST 2023
### Monitoring - VOC Plant – MS BLOCK

| S.No. | Date | Tag. No. | Equipment | Components | Line size (inch) | Location | Screening Value sv (ppm) | Estimated Emission Rate kg/day |
|---|---|---|---|---|---|---|---|---|
| 1 | 17-08-2023 | 20-PA-CF-103 A | Seal | Pump Seals | - | Pump Seal | 89.2 | 0.01869 |
| 2 | 17-08-2023 | 20-PA-CF-103 B | Seal | Pump Seals | - | Pump Seal | 8.3 | 0.00439 |
| 3 | 17-08-2023 | 20-PA-CF-102 A | Seal | Pump Seals | - | Pump Seal | 189.4 | 0.00000 |
| 4 | 17-08-2023 | 20-PA-CF-102 B | Seal | Pump Seals | - | Pump Seal | 65.2 | 0.01543 |
| 5 | 17-08-2023 | 19-PA-CF-106 A | Seal | Pump Seals | - | Pump Seal | 13.5 | 0.00591 |
| 6 | 17-08-2023 | 19-PA-CF-106 B | Seal | Pump Seals | - | Pump Seal | 6.5 | 0.00378 |
| 7 | 17-08-2023 | 19-PA-CF-104 A | Seal | Pump Seals | - | Pump Seal | 23.1 | 0.00820 |
| 8 | 17-08-2023 | 19-PA-CF-104 B | Seal | Pump Seals | - | Pump Seal | 20.4 | 0.00760 |
| 9 | 17-08-2023 | 19-PA-CF-103 A | Seal | Pump Seals | - | Pump Seal | 26.6 | 0.00893 |
| 10 | 17-08-2023 | 19-PA-CF-103 B | Seal | Pump Seals | - | Pump Seal | 48.7 | 0.01292 |
| 11 | 17-08-2023 | 19-PA-CF-101 A | Seal | Pump Seals | - | Pump Seal | 96.3 | 0.01958 |
| 12 | 17-08-2023 | 19-PA-CF-101 B | Seal | Pump Seals | - | Pump Seal | 26.1 | 0.00883 |
| 13 | 17-08-2023 | 19-PA-CF-105 A | Seal | Pump Seals | - | Pump Seal | 25.5 | 0.00870 |
| 14 | 17-08-2023 | 19-PA-CF-105 B | Seal | Pump Seals | - | Pump Seal | 5.6 | 0.00345 |
| 15 | 17-08-2023 | 20-PA-CF-101 A | Seal | Pump Seals | - | Pump Seal | 32.1 | 0.01002 |
| 16 | 17-08-2023 | 20-PA-CF-101 B | Seal | Pump Seals | - | Pump Seal | 146.2 | 0.02526 |
| 17 | 17-08-2023 | 15-PA-CF-231 A | Seal | Pump Seals | - | Pump Seal | 36.5 | 0.01083 |
| 18 | 17-08-2023 | 15-PA-CF-231 B | Seal | Pump Seals | - | Pump Seal | 32.1 | 0.01002 |
| 19 | 17-08-2023 | 15-PA-CF-201 A | Seal | Pump Seals | - | Pump Seal | 20.6 | 0.00764 |
| 20 | 17-08-2023 | 15-PA-CF-201 B | Seal | Pump Seals | - | Pump Seal | 89.4 | 0.01871 |
| 21 | 17-08-2023 | 15-PA-CF-202 A | Seal | Pump Seals | - | Pump Seal | 36.2 | 0.01078 |
| 22 | 17-08-2023 | 15-PA-CF-202 B | Seal | Pump Seals | - | Pump Seal | 143.6 | 0.02498 |
| 23 | 17-08-2023 | 15-PA-CF-208 A | Seal | Pump Seals | - | Pump Seal | 52.8 | 0.01357 |
| 24 | 17-08-2023 | 15-PA-CF-208 B | Seal | Pump Seals | - | Pump Seal | 63.1 | 0.01513 |
| 25 | 17-08-2023 | 15-PA-CF-206 A | Seal | Pump Seals | - | Pump Seal | 80.1 | 0.01750 |
| 26 | 17-08-2023 | 15-PA-CF-206 B | Seal | Pump Seals | - | Pump Seal | 26.3 | 0.00887 |
| 27 | 17-08-2023 | 15-PA-CF-207 A | Seal | Pump Seals | - | Pump Seal | 46.5 | 0.01256 |
| 28 | 17-08-2023 | 15-PA-CF-207 B | Seal | Pump Seals | - | Pump Seal | 122.6 | 0.02269 |
| 29 | 17-08-2023 | 15-PA-CF-220 A | Seal | Pump Seals | - | Pump Seal | 93.4 | 0.01922 |
| 30 | 17-08-2023 | 15-PA-CF-220 B | Seal | Pump Seals | - | Pump Seal | 63.2 | 0.01514 |
| 31 | 17-08-2023 | 15-PA-CF-220 C | Seal | Pump Seals | - | Pump Seal | 16.4 | 0.00665 |
| 32 | 17-08-2023 | 15-PA-CF-209 A | Seal | Pump Seals | - | Pump Seal | 23.5 | 0.00828 |
| 33 | 17-08-2023 | 15-PA-CF-209 B | Seal | Pump Seals | - | Pump Seal | 89.4 | 0.01871 |
| 34 | 17-08-2023 | 15-PA-CF-210 A | Seal | Pump Seals | - | Pump Seal | 56.8 | 0.01419 |
| 35 | 17-08-2023 | 15-PA-CF-210 B | Seal | Pump Seals | - | Pump Seal | 263.5 | 0.03618 |
| 36 | 17-08-2023 | 15-PA-CF-205 A | Seal | Pump Seals | - | Pump Seal | 15.4 | 0.00640 |
| 37 | 17-08-2023 | 15-PA-CF-205 B | Seal | Pump Seals | - | Pump Seal | 26.5 | 0.00891 |
| 38 | 17-08-2023 | 19-PA-CF-1101 A | Seal | Pump Seals | - | Pump Seal | 80.6 | 0.01756 |
| 39 | 17-08-2023 | 19-PA-CF-1101 B | Seal | Pump Seals | - | Pump Seal | 36.1 | 0.01076 |
| 40 | 17-08-2023 | 20-PA-CF-1105 A | Seal | Pump Seals | - | Pump Seal | 23.6 | 0.00830 |
| 41 | 17-08-2023 | 20-PA-CF-1105 B | Seal | Pump Seals | - | Pump Seal | 96.4 | 0.01959 |
| 42 | 17-08-2023 | 15-PA-CF-1211 A | Seal | Pump Seals | - | Pump Seal | 56.3 | 0.01411 |
| 43 | 17-08-2023 | 15-PA-CF-1211 B | Seal | Pump Seals | - | Pump Seal | 80.6 | 0.01756 |
| 44 | 17-08-2023 | 15-PA-CF-1251 A | Seal | Pump Seals | - | Pump Seal | 35.1 | 0.01058 |

# BHARAT PETROLEUM CORPORATION LIMITED, BINA-M.P.
## LDAR REPORT FOR THE MONTH OF AUGUST 2023

**Monitoring - VOC** **Plant – MS BLOCK**

| S.No. | Date | Tag. No. | Equipment | Components | Line size (inch) | Location | Screening Value sv (ppm) | Estimated Emission Rate kg/day |
|---|---|---|---|---|---|---|---|---|
| 45 | 17-08-2023 | 15-PA-CF-1251 B | Seal | Pump Seals | - | Pump Seal | 289.6 | 0.03832 |
| 46 | 17-08-2023 | 15N-PA-CF-1203 B | Seal | Pump Seals | - | Pump Seal | 53.1 | 0.01362 |
| 47 | 17-08-2023 | 15N-PA-CF-1203 A | Seal | Pump Seals | - | Pump Seal | 56.4 | 0.00000 |
| 48 | 17-08-2023 | 15N-PA-CF- 1204 B | Seal | Pump Seals | - | Pump Seal | 13.8 | 0.00599 |
| 49 | 17-08-2023 | 15N-PA-CF-1204 A | Seal | Pump Seals | - | Pump Seal | 79.6 | 0.01743 |
| 50 | 17-08-2023 | 15N-PA-CF-1205 A | Seal | Pump Seals | - | Pump Seal | 66.4 | 0.01561 |
| 51 | 17-08-2023 | 15N-PA-CF-1205 B | Seal | Pump Seals | - | Pump Seal | 23.5 | 0.00828 |
| 52 | 17-08-2023 | 15N-PA-CF-1202 B | Seal | Pump Seals | - | Pump Seal | 80.1 | 0.01750 |
| 53 | 17-08-2023 | 15N-PA-CF-1202 A | Seal | Pump Seals | - | Pump Seal | 23.6 | 0.00830 |
| 54 | 17-08-2023 | 15N-PA-CF-1201 B | Seal | Pump Seals | - | Pump Seal | 5.4 | 0.00338 |
| 55 | 17-08-2023 | 15N-PA-CF-1201 A | Seal | Pump Seals | - | Pump Seal | 62.2 | 0.01500 |
| **Total VOC Emission from Pump Seals** | | | | | | | | **0.71054** |

**Total VOC Emission from MS Block in August 2023 is 0.71054 kg/day**

# BHARAT PETROLEUM CORPORATION LIMITED, BINA-M.P.
## LDAR REPORT FOR THE MONTH OF AUGUST 2023
### Monitoring - VOC Plant – SRU

| S.No. | Date | Tag. No. | Equipment | Components | Line size (inch) | Location | Screening Value sv (ppm) | Estimated Emission Rate kg/day |
|---|---|---|---|---|---|---|---|---|
| 1 | 25-08-2023 | 29-PA-CF-010 A | Seal | Pump Seals | - | Pump Seal | 56.2 | 0.01410 |
| 2 | 25-08-2023 | 29-PA-CF-010 B | Seal | Pump Seals | - | Pump Seal | 123.2 | 0.02275 |
| 3 | 25-08-2023 | 29-PA-CF-011 A | Seal | Pump Seals | - | Pump Seal | 60.4 | 0.01473 |
| 4 | 25-08-2023 | 29-PA-CF-011 B | Seal | Pump Seals | - | Pump Seal | 5.5 | 0.00342 |
| 5 | 25-08-2023 | 29-PA-CF-008 A | Seal | Pump Seals | - | Pump Seal | 62.1 | 0.01498 |
| 6 | 25-08-2023 | 29-PA-CF-008 B | Seal | Pump Seals | - | Pump Seal | 23.6 | 0.00830 |
| 7 | 25-08-2023 | 29-PA-CF-007 | Seal | Pump Seals | - | Pump Seal | 53.4 | 0.01366 |
| 8 | 25-08-2023 | 29-PA-CF-006 A | Seal | Pump Seals | - | Pump Seal | 80.4 | 0.01754 |
| 9 | 25-08-2023 | 29-PA-CF-006 B | Seal | Pump Seals | - | Pump Seal | 6.6 | 0.00382 |
| 10 | 25-08-2023 | 28-PA-CF-102 A | Seal | Pump Seals | - | Pump Seal | 23.1 | 0.00820 |
| 11 | 25-08-2023 | 28-PA-CF-102 B | Seal | Pump Seals | - | Pump Seal | 30.8 | 0.00977 |
| 12 | 25-08-2023 | 28-PA-CF-102 C | Seal | Pump Seals | - | Pump Seal | 70.4 | 0.01617 |
| 13 | 25-08-2023 | 28-PA-CF-103 A | Seal | Pump Seals | - | Pump Seal | 156.5 | 0.02633 |
| 14 | 25-08-2023 | 28-PA-CF-103 B | Seal | Pump Seals | - | Pump Seal | 6.2 | 0.00367 |
| 15 | 25-08-2023 | 28-PA-CF-202 A | Seal | Pump Seals | - | Pump Seal | 13.5 | 0.00591 |
| 16 | 25-08-2023 | 28-PA-CF-202 B | Seal | Pump Seals | - | Pump Seal | 40.1 | 0.01147 |
| 17 | 25-08-2023 | 28-PA-CF-203 A | Seal | Pump Seals | - | Pump Seal | 23.5 | 0.00828 |
| 18 | 25-08-2023 | 28-PA-CF-203 B | Seal | Pump Seals | - | Pump Seal | 62.1 | 0.01498 |
| 19 | 25-08-2023 | 28-PA-CF-204 A | Seal | Pump Seals | - | Pump Seal | 6.5 | 0.00378 |
| 20 | 25-08-2023 | 28-PA-CF-204 B | Seal | Pump Seals | - | Pump Seal | 34.5 | 0.01047 |
| 21 | 25-08-2023 | 28-PA-CF-204 C | Seal | Pump Seals | - | Pump Seal | 80.4 | 0.01754 |
| 22 | 25-08-2023 | 29-PA-CF-002 A | Seal | Pump Seals | - | Pump Seal | 56.2 | 0.01410 |
| 23 | 25-08-2023 | 29-PA-CF-002 B | Seal | Pump Seals | - | Pump Seal | 156.4 | 0.02632 |
| 24 | 25-08-2023 | 29-PA-CF-002 C | Seal | Pump Seals | - | Pump Seal | 23.4 | 0.00826 |
| 25 | 25-08-2023 | 29-PA-CF-002 D | Seal | Pump Seals | - | Pump Seal | 60.1 | 0.01469 |
| 26 | 25-08-2023 | 27-PA-CF-102 A | Seal | Pump Seals | - | Pump Seal | 2.2 | 0.00195 |
| 27 | 25-08-2023 | 27-PA-CF-102 B | Seal | Pump Seals | - | Pump Seal | 60.7 | 0.01477 |
| 28 | 25-08-2023 | 29-PA-CF-009 A | Seal | Pump Seals | - | Pump Seal | 80.6 | 0.01756 |
| 29 | 25-08-2023 | 29-PA-CF-009 B | Seal | Pump Seals | - | Pump Seal | 3.4 | 0.00255 |
| 30 | 25-08-2023 | 29-PA-CF-009 C | Seal | Pump Seals | - | Pump Seal | 50.1 | 0.01314 |
| 31 | 25-08-2023 | 27-PA-CF-101 A | Seal | Pump Seals | - | Pump Seal | 93.4 | 0.01922 |
| 32 | 25-08-2023 | 27-PA-CF-101 B | Seal | Pump Seals | - | Pump Seal | 246.5 | 0.03474 |
| 33 | 25-08-2023 | 27-PA-CF-103 A | Seal | Pump Seals | - | Pump Seal | 31.2 | 0.00984 |
| 34 | 25-08-2023 | 27-PA-CF-103 B | Seal | Pump Seals | - | Pump Seal | 50.6 | 0.01322 |
| 35 | 25-08-2023 | 29-PA-MT-1001 A | Seal | Pump Seals | - | Pump Seal | 35.4 | 0.01063 |
| 36 | 25-08-2023 | 29-PA-MT-1001 B | Seal | Pump Seals | - | Pump Seal | 147.5 | 0.02539 |
| 37 | 25-08-2023 | 29-PA-MT-1001 C | Seal | Pump Seals | - | Pump Seal | 23.6 | 0.00830 |
| | | | | | | | **Total VOC Emission from Pump Seals** | **0.48457** |

**Total VOC Emission from SRU in August 2023 is 0.48457 kg/day**

# BHARAT PETROLEUM CORPORATION LIMITED, BINA-M.P.
## LDAR REPORT FOR THE MONTH OF AUGUST 2023
**Monitoring - VOC** **Plant – DCU**

| S.No. | Date | Tag. No. | Equipment | Components | Line size (inch) | Location | Screening Value sv (ppm) | Estimated Emission Rate kg/day |
|---|---|---|---|---|---|---|---|---|
| 1 | 21-08-2023 | 14-PA-CF-101-B | Seal | Pump Seals | - | Pump Seal | 82.1 | 0.01776 |
| 2 | 21-08-2023 | 14-PA-CF-101-A | Seal | Pump Seals | - | Pump Seal | 144.5 | 0.02508 |
| 3 | 21-08-2023 | 14-PA-CF-108-B | Seal | Pump Seals | - | Pump Seal | 63.2 | 0.01514 |
| 4 | 21-08-2023 | 14-PA-CF-108-A | Seal | Pump Seals | - | Pump Seal | 5.8 | 0.00353 |
| 5 | 21-08-2023 | 14-PA-CF-141-B | Seal | Pump Seals | - | Pump Seal | 79.6 | 0.01743 |
| 6 | 21-08-2023 | 14-PA-CF-141-A | Seal | Pump Seals | - | Pump Seal | 53.1 | 0.01362 |
| 7 | 21-08-2023 | 14-PA-CF-105-B | Seal | Pump Seals | - | Pump Seal | 42.5 | 0.01189 |
| 8 | 21-08-2023 | 14-PA-CF-105-A | Seal | Pump Seals | - | Pump Seal | 80.1 | 0.01750 |
| 9 | 21-08-2023 | 14-PA-CF-122-B | Seal | Pump Seals | - | Pump Seal | 163.2 | 0.02701 |
| 10 | 21-08-2023 | 14-PA-CF-122-A | Seal | Pump Seals | - | Pump Seal | 5.4 | 0.00338 |
| 11 | 21-08-2023 | 14-PA-CF-121-B | Seal | Pump Seals | - | Pump Seal | 80.6 | 0.01756 |
| 12 | 21-08-2023 | 14-PA-CF-121-A | Seal | Pump Seals | - | Pump Seal | 93.4 | 0.01922 |
| 13 | 21-08-2023 | 14-PA-CF-106-B | Seal | Pump Seals | - | Pump Seal | 5.2 | 0.00330 |
| 14 | 21-08-2023 | 14-PA-CF-106-A | Seal | Pump Seals | - | Pump Seal | 16.4 | 0.00665 |
| 15 | 21-08-2023 | 14-PA-CF-107-B | Seal | Pump Seals | - | Pump Seal | 52.2 | 0.01348 |
| 16 | 21-08-2023 | 14-PA-CF-107-A | Seal | Pump Seals | - | Pump Seal | 63.1 | 0.01513 |
| 17 | 21-08-2023 | 14-PA-CF-104-B | Seal | Pump Seals | - | Pump Seal | 20.5 | 0.00762 |
| 18 | 21-08-2023 | 14-PA-CF-104-A | Seal | Pump Seals | - | Pump Seal | 80.6 | 0.01756 |
| 19 | 21-08-2023 | 14-PA-CF-102-B | Seal | Pump Seals | - | Pump Seal | 5.5 | 0.00342 |
| 20 | 21-08-2023 | 14-PA-CF-102-A | Seal | Pump Seals | - | Pump Seal | 13.2 | 0.00583 |
| 21 | 21-08-2023 | 14-PA-CF-109-B | Seal | Pump Seals | - | Pump Seal | 6.5 | 0.00378 |
| 22 | 21-08-2023 | 14-PA-CF-109-A | Seal | Pump Seals | - | Pump Seal | 34.5 | 0.01047 |
| 23 | 21-08-2023 | 14-PA-CF-111-B | Seal | Pump Seals | - | Pump Seal | 83.2 | 0.01791 |
| 24 | 21-08-2023 | 14-PA-CF-111-A | Seal | Pump Seals | - | Pump Seal | 16.5 | 0.00667 |
| 25 | 21-08-2023 | 14-PA-CF-113-B | Seal | Pump Seals | - | Pump Seal | 46.2 | 0.01251 |
| 26 | 21-08-2023 | 14-PA-CF-113-A | Seal | Pump Seals | - | Pump Seal | 13.5 | 0.00591 |
| 27 | 21-08-2023 | 14-PA-CF-112-B | Seal | Pump Seals | - | Pump Seal | 8.3 | 0.00439 |
| 28 | 21-08-2023 | 14-PA-CF-112-A | Seal | Pump Seals | - | Pump Seal | 63.4 | 0.01517 |
| 29 | 21-08-2023 | 14-PA-CF-1002 A | Seal | Pump Seals | - | Pump Seal | 12.5 | 0.00564 |
| 30 | 21-08-2023 | 14-PA-CF-1002 B | Seal | Pump Seals | - | Pump Seal | 5.5 | 0.00342 |
| 31 | 21-08-2023 | 14-PA-CF-1001 A | Seal | Pump Seals | - | Pump Seal | 93.4 | 0.01922 |
| 32 | 21-08-2023 | 14-PA-CF-1001 B | Seal | Pump Seals | - | Pump Seal | 25.1 | 0.00862 |
| 33 | 21-08-2023 | 14-PA-CF-121 (N) C | Seal | Pump Seals | - | Pump Seal | 2.6 | 0.00216 |
| | | | | | | | **Total VOC Emission from Pump Seals** | **0.37796** |

**Total VOC Emission from DCU in August 2023 is 0.37796 kg/day**

# BHARAT PETROLEUM CORPORATION LIMITED, BINA-M.P.
## LDAR REPORT FOR THE MONTH OF AUGUST 2023
**Monitoring - VOC** **Plant – OFFSITE**

| S.No. | Date | Tag. No. | Equipment | Components | Line size (inch) | Location | Screening Value sv (ppm) | Estimated Emission Rate kg/day |
|---|---|---|---|---|---|---|---|---|
| 1 | 25-08-2023 | 52-PA-CF-005 B | Seal | Pump Seals | - | Pump Seal | 56.4 | 0.01413 |
| 2 | 25-08-2023 | 52-PA-CF-005 A | Seal | Pump Seals | - | Pump Seal | 23.1 | 0.00820 |
| 3 | 25-08-2023 | 52-PA-CF-021 B | Seal | Pump Seals | - | Pump Seal | 30.6 | 0.00973 |
| 4 | 25-08-2023 | 52-PA-CF-021 A | Seal | Pump Seals | - | Pump Seal | 5.1 | 0.00326 |
| 5 | 25-08-2023 | 52-PA-CF-018 | Seal | Pump Seals | - | Pump Seal | 23.5 | 0.00828 |
| 6 | 25-08-2023 | 52-PA-CF-016 B | Seal | Pump Seals | - | Pump Seal | 40.6 | 0.01156 |
| 7 | 25-08-2023 | 52-PA-CF-016 A | Seal | Pump Seals | - | Pump Seal | 93.8 | 0.01927 |
| 8 | 25-08-2023 | 52-PA-CF-08 B | Seal | Pump Seals | - | Pump Seal | 71.2 | 0.01629 |
| 9 | 25-08-2023 | 52-PA-CF-08 A | Seal | Pump Seals | - | Pump Seal | 36.5 | 0.01083 |
| 10 | 25-08-2023 | 52-PA-CF-011 B | Seal | Pump Seals | - | Pump Seal | 4.4 | 0.00298 |
| 11 | 25-08-2023 | 52-PA-CF-011 A | Seal | Pump Seals | - | Pump Seal | 23.6 | 0.00830 |
| 12 | 25-08-2023 | 52-PA-CF-012 B | Seal | Pump Seals | - | Pump Seal | 53.1 | 0.01362 |
| 13 | 25-08-2023 | 52-PA-CF-012 A | Seal | Pump Seals | - | Pump Seal | 30.6 | 0.00973 |
| 14 | 25-08-2023 | 52-PA-CF-014 B | Seal | Pump Seals | - | Pump Seal | 50.1 | 0.01314 |
| 15 | 25-08-2023 | 52-PA-CF-014 A | Seal | Pump Seals | - | Pump Seal | 23.8 | 0.00835 |
| 16 | 25-08-2023 | 52-PA-CF-013 B | Seal | Pump Seals | - | Pump Seal | 46.5 | 0.01256 |
| 17 | 25-08-2023 | 52-PA-CF-013 A | Seal | Pump Seals | - | Pump Seal | 156.4 | 0.02632 |
| 18 | 25-08-2023 | 52-PA-CF-09 B | Seal | Pump Seals | - | Pump Seal | 23.6 | 0.00830 |
| 19 | 25-08-2023 | 52-PA-CF-09 A | Seal | Pump Seals | - | Pump Seal | 93.4 | 0.01922 |
| 20 | 25-08-2023 | 52-PA-CF-017 B | Seal | Pump Seals | - | Pump Seal | 10.5 | 0.00507 |
| 21 | 25-08-2023 | 52-PA-CF-017 A | Seal | Pump Seals | - | Pump Seal | 23.6 | 0.00830 |
| 22 | 25-08-2023 | 52-PA-CF-003 B | Seal | Pump Seals | - | Pump Seal | 3.4 | 0.00255 |
| | | | | | | | **Total VOC Emission from Pump Seals** | **0.23997** |

**Total VOC Emission from Offsite in August 2023 is 0.23997 kg/day**

## BHARAT PETROLEUM CORPORATION LIMITED, BINA-M.P.
## LDAR REPORT FOR THE MONTH OF AUGUST 2023

**Monitoring - VOC** **Plant – HGU**

| S.No. | Date | Tag. No. | Equipment | Components | Line size (inch) | Location | Screening Value sv (ppm) | Estimated Emission Rate kg/day |
|---|---|---|---|---|---|---|---|---|
| 1 | 23-08-2023 | 18-PA-CF-11 A | Seal | Pump Seals | - | Pump Seal | 50.2 | 0.01316 |
| 2 | 23-08-2023 | 18-PA-CF-11 B | Seal | Pump Seals | - | Pump Seal | 63.2 | 0.01514 |
| **Total VOC Emission from Pump Seals** | | | | | | | | **0.02830** |

**Total VOC Emission from HGU in August 2023 is 0.02830 kg/day**

# BHARAT PETROLEUM CORPORATION LIMITED, BINA-M.P.
## LDAR REPORT FOR THE MONTH OF AUGUST 2023
**Monitoring - VOC** **Plant – ETP**

| S.No. | Date | Tag. No. | Equipment | Components | Line size (inch) | Location | Screening Value sv (ppm) | Estimated Emission Rate kg/day |
|---|---|---|---|---|---|---|---|---|
| 1 | 19-08-2023 | 056-P-36 A | Seal | Pump Seals | - | Pump Seal | 61.2 | 0.01485 |
| 2 | 19-08-2023 | 056-P-36 B | Seal | Pump Seals | - | Pump Seal | 5.3 | 0.00334 |
| | | | | | | | **Total VOC Emission from Pump Seals** | **0.01819** |

**Total VOC Emission from ETP in August 2023 is 0.01819 kg/day**

# BHARAT PETROLEUM CORPORATION LIMITED, BINA-M.P.
## LDAR REPORT FOR THE MONTH OF AUGUST 2023
**Monitoring - VOC** **Plant – KHDS**

| S.No. | Date | Tag. No. | Equipment | Components | Line size (inch) | Location | Screening Value sv (ppm) | Estimated Emission Rate kg/day |
|---|---|---|---|---|---|---|---|---|
| 1 | 26-08-2023 | 17-PA-CF-103 A | Seal | Pump Seals | - | Pump Seal | 56.2 | 0.01410 |
| 2 | 26-08-2023 | 17-PA-CF-103 B | Seal | Pump Seals | - | Pump Seal | 32.5 | 0.01009 |
| 3 | 26-08-2023 | 17-PA-RP-107 A | Seal | Pump Seals | - | Pump Seal | 12.6 | 0.00566 |
| 4 | 26-08-2023 | 17-PA-RP-107 B | Seal | Pump Seals | - | Pump Seal | 44.5 | 0.01223 |
| 5 | 26-08-2023 | 17-PA-RP-108 A | Seal | Pump Seals | - | Pump Seal | 36.9 | 0.01091 |
| 6 | 26-08-2023 | 17-PA-RP-108 B | Seal | Pump Seals | - | Pump Seal | 9.1 | 0.00464 |
| 7 | 26-08-2023 | 17-PA-CF-104 A | Seal | Pump Seals | - | Pump Seal | 42.8 | 0.01194 |
| 8 | 26-08-2023 | 17-PA-CF-104 B | Seal | Pump Seals | - | Pump Seal | 76.4 | 0.01700 |
| 9 | 26-08-2023 | 17-PA-CF-106 A | Seal | Pump Seals | - | Pump Seal | 23.5 | 0.00828 |
| 10 | 26-08-2023 | 17-PA-CF-106 B | Seal | Pump Seals | - | Pump Seal | 90.5 | 0.01885 |
| 11 | 26-08-2023 | 17-PA-CF-101 A | Seal | Pump Seals | - | Pump Seal | 28.6 | 0.00934 |
| 12 | 26-08-2023 | 17-PA-CF-101 B | Seal | Pump Seals | - | Pump Seal | 33.2 | 0.01023 |
| 13 | 26-08-2023 | 17-PA-RP-102 A | Seal | Pump Seals | - | Pump Seal | 165.2 | 0.02721 |
| 14 | 26-08-2023 | 17-PA-RP-102 B | Seal | Pump Seals | - | Pump Seal | 43.2 | 0.01201 |
| 15 | 26-08-2023 | 17-PA-MT-125 A | Seal | Pump Seals | - | Pump Seal | 30.8 | 0.00977 |
| 16 | 26-08-2023 | 17-PA-MT-125 B | Seal | Pump Seals | - | Pump Seal | 46.9 | 0.01262 |
| 17 | 26-08-2023 | 17-PA-MT-124 A | Seal | Pump Seals | - | Pump Seal | 80.4 | 0.01754 |
| 18 | 26-08-2023 | 17-PA-MT-124 B | Seal | Pump Seals | - | Pump Seal | 13.5 | 0.00591 |
| 19 | 26-08-2023 | 17-PA-MT-123 A | Seal | Pump Seals | - | Pump Seal | 62.5 | 0.01504 |
| 20 | 26-08-2023 | 17-PA-MT-123 B | Seal | Pump Seals | - | Pump Seal | 122.5 | 0.02267 |
| 21 | 26-08-2023 | 17-PA-RP-105 A | Seal | Pump Seals | - | Pump Seal | 63.8 | 0.01523 |
| 22 | 26-08-2023 | 17-PA-RP-105 B | Seal | Pump Seals | - | Pump Seal | 70.8 | 0.01623 |
| 23 | 26-08-2023 | 17-PA-SM-121 A | Seal | Pump Seals | - | Pump Seal | 12.1 | 0.00552 |
| 24 | 26-08-2023 | 17-PA-SM-121 B | Seal | Pump Seals | - | Pump Seal | 5.9 | 0.00356 |
| | | | | | | | **Total VOC Emission from Pump Seals** | **0.29658** |

**Total VOC Emission from KHDS in August 2023 is 0.29658 kg/day**

# LDAR VOC MONTHLY MONITORING

## MONTH – SEPTEMBER 2023

# BHARAT PETROLEUM CORPORATION LIMITED, BINA-M.P.
## LDAR REPORT FOR THE MONTH OF SEPTEMBER 2023
### Monitoring - VOC Plant – BDT

| S.No. | Date | Tag. No. | Equipment | Components | Line size (inch) | Location | Screening Value sv (ppm) | Estimated Emission Rate kg/day |
|---|---|---|---|---|---|---|---|---|
| 1 | 08-09-2023 | 70-PA-CF-13 D | Seal | Pump Seals | - | Pump Seal | 12.9 | 0.00574 |
| 2 | 08-09-2023 | 70-PA-CF-13 C | Seal | Pump Seals | - | Pump Seal | 36.8 | 0.01089 |
| 3 | 08-09-2023 | 70-PA-CF-13 B | Seal | Pump Seals | - | Pump Seal | 70.4 | 0.01617 |
| 4 | 08-09-2023 | 70-PA-CF-13 A | Seal | Pump Seals | - | Pump Seal | 23.6 | 0.00830 |
| 5 | 08-09-2023 | 70-PA-CF-9 C | Seal | Pump Seals | - | Pump Seal | 53.1 | 0.01362 |
| 6 | 08-09-2023 | 70-PA-CF-9 B | Seal | Pump Seals | - | Pump Seal | 20.9 | 0.00771 |
| 7 | 08-09-2023 | 70-PA-CF-9 A | Seal | Pump Seals | - | Pump Seal | 80.6 | 0.01756 |
| 8 | 08-09-2023 | 70-PA-CF-3 B | Seal | Pump Seals | - | Pump Seal | 120.8 | 0.02248 |
| 9 | 08-09-2023 | 70-PA-CF-3 A | Seal | Pump Seals | - | Pump Seal | 91.4 | 0.01897 |
| 10 | 08-09-2023 | 70-PA-CF-11 C | Seal | Pump Seals | - | Pump Seal | 6.6 | 0.00382 |
| 11 | 08-09-2023 | 70-PA-CF-11 B | Seal | Pump Seals | - | Pump Seal | 13.7 | 0.00596 |
| 12 | 08-09-2023 | 70-PA-CF-11 A | Seal | Pump Seals | - | Pump Seal | 80.6 | 0.01756 |
| 13 | 08-09-2023 | 70-PA-CF-10 A | Seal | Pump Seals | - | Pump Seal | 36.9 | 0.01091 |
| 14 | 08-09-2023 | 70-PA-CF-10 B | Seal | Pump Seals | - | Pump Seal | 63.8 | 0.01523 |
| 15 | 08-09-2023 | 70-PA-CF-10 C | Seal | Pump Seals | - | Pump Seal | 79.4 | 0.01740 |
| 16 | 08-09-2023 | 70-PA-CF-4 A | Seal | Pump Seals | - | Pump Seal | 61.2 | 0.01485 |
| 17 | 08-09-2023 | 70-PA-CF-4 B | Seal | Pump Seals | - | Pump Seal | 123.9 | 0.02283 |
| 18 | 08-09-2023 | 70-PA-CF-4 C | Seal | Pump Seals | - | Pump Seal | 64.7 | 0.01536 |
| 19 | 08-09-2023 | 70-PA-CF-4 D | Seal | Pump Seals | - | Pump Seal | 60.1 | 0.01469 |
| 20 | 08-09-2023 | 70-PA-CF-4 E | Seal | Pump Seals | - | Pump Seal | 23.4 | 0.00826 |
| 21 | 08-09-2023 | 70-PA-CF-12 A | Seal | Pump Seals | - | Pump Seal | 63.9 | 0.01525 |
| 22 | 08-09-2023 | 70-PA-CF-12 B | Seal | Pump Seals | - | Pump Seal | 73.6 | 0.01662 |
| 23 | 08-09-2023 | 70-PA-CF-12 C | Seal | Pump Seals | - | Pump Seal | 91.2 | 0.01894 |
| 24 | 08-09-2023 | 70-PA-CF-12 D | Seal | Pump Seals | - | Pump Seal | 36.4 | 0.01082 |
| 25 | 08-09-2023 | 70-PA-CF-12 E | Seal | Pump Seals | - | Pump Seal | 26.1 | 0.00883 |
| 26 | 08-09-2023 | 70-PA-CF-8 C | Seal | Pump Seals | - | Pump Seal | 136.3 | 0.02420 |
| 27 | 08-09-2023 | 70-PA-CF-8 B | Seal | Pump Seals | - | Pump Seal | 83.1 | 0.01790 |
| 28 | 08-09-2023 | 70-PA-CF-8 A | Seal | Pump Seals | - | Pump Seal | 26.4 | 0.00889 |
| 29 | 08-09-2023 | 70-PA-CF-2 E | Seal | Pump Seals | - | Pump Seal | 63.4 | 0.01517 |
| 30 | 08-09-2023 | 70-PA-CF-2 D | Seal | Pump Seals | - | Pump Seal | 80.6 | 0.01756 |
| 31 | 08-09-2023 | 70-PA-CF-2 C | Seal | Pump Seals | - | Pump Seal | 32.1 | 0.01002 |
| 32 | 08-09-2023 | 70-PA-CF-2 B | Seal | Pump Seals | - | Pump Seal | 89.7 | 0.01875 |
| 33 | 08-09-2023 | 70-PA-CF-2 A | Seal | Pump Seals | - | Pump Seal | 41.6 | 0.01173 |
| 34 | 08-09-2023 | 70-PA-CF-6 E | Seal | Pump Seals | - | Pump Seal | 25.9 | 0.00879 |
| 35 | 08-09-2023 | 70-PA-CF-6 D | Seal | Pump Seals | - | Pump Seal | 86.4 | 0.01833 |
| 36 | 08-09-2023 | 70-PA-CF-6 C | Seal | Pump Seals | - | Pump Seal | 156.4 | 0.02632 |
| 37 | 08-09-2023 | 70-PA-CF-6 B | Seal | Pump Seals | - | Pump Seal | 316.4 | 0.04045 |
| 38 | 08-09-2023 | 70-PA-CF-6 A | Seal | Pump Seals | - | Pump Seal | 50.8 | 0.01325 |
| 39 | 08-09-2023 | 70-PA-CF-7 A | Seal | Pump Seals | - | Pump Seal | 93.1 | 0.01918 |
| 40 | 08-09-2023 | 70-PA-CF-7 B | Seal | Pump Seals | - | Pump Seal | 26.6 | 0.00893 |
| 41 | 08-09-2023 | 70-PA-CF-1 A | Seal | Pump Seals | - | Pump Seal | 83.4 | 0.01793 |
| 42 | 08-09-2023 | 70-PA-CF-1 B | Seal | Pump Seals | - | Pump Seal | 153.4 | 0.02601 |
| 43 | 08-09-2023 | 70-PA-CF-1 C | Seal | Pump Seals | - | Pump Seal | 80.7 | 0.01758 |
| 44 | 08-09-2023 | 70-PA-CF-5 A | Seal | Pump Seals | - | Pump Seal | 89.9 | 0.01877 |
| 45 | 08-09-2023 | 70-PA-CF-5 B | Seal | Pump Seals | - | Pump Seal | 6.9 | 0.00392 |
| 46 | 08-09-2023 | 70-PA-CF-5 C | Seal | Pump Seals | - | Pump Seal | 60.7 | 0.01477 |
| 47 | 08-09-2023 | 70-PA-CF-14 A | Seal | Pump Seals | - | Pump Seal | 36.2 | 0.01078 |
| 48 | 08-09-2023 | 70-PA-CF-14 B | Seal | Pump Seals | - | Pump Seal | 26.8 | 0.00897 |
| 49 | 08-09-2023 | 70-PA-CF-23 | Seal | Pump Seals | - | Pump Seal | 93.5 | 0.01923 |
| 50 | 08-09-2023 | 70-PA-CF-24 | Seal | Pump Seals | - | Pump Seal | 23.6 | 0.00830 |
| 51 | 08-09-2023 | 70-PA-CF-25 | Seal | Pump Seals | - | Pump Seal | 43.2 | 0.01201 |
| 52 | 08-09-2023 | 70-PA-CF-26 | Seal | Pump Seals | - | Pump Seal | 61.7 | 0.01492 |

# BHARAT PETROLEUM CORPORATION LIMITED, BINA-M.P.
## LDAR REPORT FOR THE MONTH OF SEPTEMBER 2023
### Monitoring - VOC Plant – BDT

| S.No. | Date | Tag. No. | Equipment | Components | Line size (inch) | Location | Screening Value sv (ppm) | Estimated Emission Rate kg/day |
|---|---|---|---|---|---|---|---|---|
| 53 | 08-09-2023 | 70-PA-CF-16 | Seal | Pump Seals | - | Pump Seal | 83.5 | 0.01795 |
| 54 | 08-09-2023 | 70-PA-CF-15 A | Seal | Pump Seals | - | Pump Seal | 62.1 | 0.01498 |
| 55 | 08-09-2023 | 70-PA-CF-15 B | Seal | Pump Seals | - | Pump Seal | 146.3 | 0.02527 |
| 56 | 08-09-2023 | 70-PA-CF-15 C | Seal | Pump Seals | - | Pump Seal | 26.9 | 0.00899 |
| | | | | | | | **Total VOC Emission fom Pump Seals** | **0.83864** |

**Total VOC Emission from BDT in September 2023 is 0.83864 kg/day**

# BHARAT PETROLEUM CORPORATION LIMITED, BINA-M.P.
## LDAR REPORT FOR THE MONTH OF SEPTEMBER 2023
**Monitoring - VOC** **Plant – HCU / DHDT**

| S.No. | Date | Tag. No. | Equipment | Components | Line size (inch) | Location | Screening Value sv (ppm) | Estimated Emission Rate kg/day |
|---|---|---|---|---|---|---|---|---|
| 1 | 05-09-2023 | 16-PA-CF-605 B | Seal | Pump Seals | - | Pump Seal | 52.8 | 0.01357 |
| 2 | 05-09-2023 | 16-PA-CF-605 A | Seal | Pump Seals | - | Pump Seal | 41.9 | 0.01179 |
| 3 | 05-09-2023 | 16-PA-CF-606 B | Seal | Pump Seals | - | Pump Seal | 68.6 | 0.01592 |
| 4 | 05-09-2023 | 16-PA-CF-606 A | Seal | Pump Seals | - | Pump Seal | 31.7 | 0.00994 |
| 5 | 05-09-2023 | 16-PA-CF-603 B | Seal | Pump Seals | - | Pump Seal | 25.4 | 0.00868 |
| 6 | 05-09-2023 | 16-PA-CF-603 A | Seal | Pump Seals | - | Pump Seal | 66.8 | 0.01566 |
| 7 | 05-09-2023 | 16-PA-CF-1602 B | Seal | Pump Seals | - | Pump Seal | 61.2 | 0.01485 |
| 8 | 05-09-2023 | 16-PA-CF-1602 A | Seal | Pump Seals | - | Pump Seal | 213.6 | 0.03183 |
| 9 | 05-09-2023 | 16-PA-CF-601 A | Seal | Pump Seals | - | Pump Seal | 50.2 | 0.01316 |
| 10 | 05-09-2023 | 16-PA-CF-601 B | Seal | Pump Seals | - | Pump Seal | 31.2 | 0.00984 |
| 11 | 05-09-2023 | 16-PA-CF-608 A | Seal | Pump Seals | - | Pump Seal | 63.2 | 0.01514 |
| 12 | 05-09-2023 | 16-PA-CF-608 B | Seal | Pump Seals | - | Pump Seal | 80.4 | 0.01754 |
| 13 | 05-09-2023 | 16-PA-CF-602 A | Seal | Pump Seals | - | Pump Seal | 79.5 | 0.01742 |
| 14 | 05-09-2023 | 16-PA-CF-602 B | Seal | Pump Seals | - | Pump Seal | 25.4 | 0.00868 |
| 15 | 05-09-2023 | 16-PA-CF-810 A | Seal | Pump Seals | - | Pump Seal | 16.8 | 0.00675 |
| 16 | 05-09-2023 | 16-PA-CF-810 B | Seal | Pump Seals | - | Pump Seal | 93.4 | 0.01922 |
| 17 | 05-09-2023 | 16-PA-CF-701 A | Seal | Pump Seals | - | Pump Seal | 11.2 | 0.00527 |
| 18 | 05-09-2023 | 16-PA-CF-701 B | Seal | Pump Seals | - | Pump Seal | 246.2 | 0.03471 |
| 19 | 05-09-2023 | 16-PA-CF-501 A | Seal | Pump Seals | - | Pump Seal | 50.7 | 0.01324 |
| 20 | 05-09-2023 | 16-PA-CF-501 B | Seal | Pump Seals | - | Pump Seal | 93.2 | 0.01919 |
| 21 | 05-09-2023 | 16-PA-CF-505 A | Seal | Pump Seals | - | Pump Seal | 16.4 | 0.00665 |
| 22 | 05-09-2023 | 16-PA-CF-505 B | Seal | Pump Seals | - | Pump Seal | 316.2 | 0.04043 |
| 23 | 05-09-2023 | 16-PA-CF-508 A | Seal | Pump Seals | - | Pump Seal | 63.4 | 0.01517 |
| 24 | 05-09-2023 | 16-PA-CF-508 B | Seal | Pump Seals | - | Pump Seal | 30.6 | 0.00973 |
| 25 | 05-09-2023 | 16-PA-CF-507 A | Seal | Pump Seals | - | Pump Seal | 99.4 | 0.01996 |
| 26 | 05-09-2023 | 16-PA-CF-507 B | Seal | Pump Seals | - | Pump Seal | 25.6 | 0.00873 |
| 27 | 05-09-2023 | 16-PA-CF-705 A | Seal | Pump Seals | - | Pump Seal | 31.2 | 0.00984 |
| 28 | 05-09-2023 | 16-PA-CF-705 B | Seal | Pump Seals | - | Pump Seal | 30.6 | 0.00973 |
| 29 | 05-09-2023 | 16-PA-CF-502 A | Seal | Pump Seals | - | Pump Seal | 44.2 | 0.01218 |
| 30 | 05-09-2023 | 16-PA-CF-502 B | Seal | Pump Seals | - | Pump Seal | 3.1 | 0.00241 |
| 31 | 05-09-2023 | 16-PA-CF-506 A | Seal | Pump Seals | - | Pump Seal | 79.4 | 0.01740 |
| 32 | 05-09-2023 | 16-PA-CF-506 B | Seal | Pump Seals | - | Pump Seal | 23.1 | 0.00820 |
| 33 | 05-09-2023 | 16-PA-CF-504 A | Seal | Pump Seals | - | Pump Seal | 50.4 | 0.01319 |
| 34 | 05-09-2023 | 16-PA-CF-504 B | Seal | Pump Seals | - | Pump Seal | 23.6 | 0.00830 |
| 35 | 05-09-2023 | 16-PA-CF-503 A | Seal | Pump Seals | - | Pump Seal | 66.7 | 0.01565 |
| 36 | 05-09-2023 | 16-PA-CF-503 B | Seal | Pump Seals | - | Pump Seal | 80.4 | 0.01754 |
| 37 | 05-09-2023 | 16-PA-CF-703 B | Seal | Pump Seals | - | Pump Seal | 61.2 | 0.01485 |
| 38 | 05-09-2023 | 16-PA-CF-703 A | Seal | Pump Seals | - | Pump Seal | 23.7 | 0.00832 |
| 39 | 05-09-2023 | 16-PA-CF-702 B | Seal | Pump Seals | - | Pump Seal | 40.6 | 0.01156 |
| 40 | 05-09-2023 | 16-PA-CF-702 A | Seal | Pump Seals | - | Pump Seal | 39.1 | 0.01130 |
| 41 | 05-09-2023 | 16-PA-CF-704 B | Seal | Pump Seals | - | Pump Seal | 23.9 | 0.00837 |
| 42 | 05-09-2023 | 16-PA-CF-704 A | Seal | Pump Seals | - | Pump Seal | 83.4 | 0.01793 |

# BHARAT PETROLEUM CORPORATION LIMITED, BINA-M.P.
## LDAR REPORT FOR THE MONTH OF SEPTEMBER 2023

**Monitoring - VOC** **Plant – HCU / DHDT**

| S.No. | Date | Tag. No. | Equipment | Components | Line size (inch) | Location | Screening Value sv (ppm) | Estimated Emission Rate kg/day |
|---|---|---|---|---|---|---|---|---|
| 43 | 05-09-2023 | 16-PA-CF-812 A | Seal | Pump Seals | - | Pump Seal | 20.6 | 0.00764 |
| 44 | 05-09-2023 | 16-PA-CF-812 B | Seal | Pump Seals | - | Pump Seal | 1.1 | 0.00128 |
| 45 | 05-09-2023 | 16-PA-CF-201 A | Seal | Pump Seals | - | Pump Seal | 23.7 | 0.00832 |
| 46 | 05-09-2023 | 16-PA-CF-201 B | Seal | Pump Seals | - | Pump Seal | 80.1 | 0.01750 |
| 47 | 05-09-2023 | 16-PA-CF-101 | Seal | Pump Seals | - | Pump Seal | 23.3 | 0.00824 |
| 48 | 05-09-2023 | 16-PA-CF-301 B | Seal | Pump Seals | - | Pump Seal | 63.4 | 0.01517 |
| 49 | 05-09-2023 | 16-PA-CF-301 A | Seal | Pump Seals | - | Pump Seal | 20.5 | 0.00762 |
| 50 | 05-09-2023 | 16-PA-CF-402 A | Seal | Pump Seals | - | Pump Seal | 3.6 | 0.00264 |
| 51 | 05-09-2023 | 16-PA-CF-402 B | Seal | Pump Seals | - | Pump Seal | 63.1 | 0.01513 |
| 52 | 05-09-2023 | 16-PA-CF-102 A | Seal | Pump Seals | - | Pump Seal | 20.4 | 0.00760 |
| 53 | 05-09-2023 | 16-PA-CF-102 B | Seal | Pump Seals | - | Pump Seal | 73.1 | 0.01655 |
| 54 | 05-09-2023 | 16-PA-CF-405 | Seal | Pump Seals | - | Pump Seal | 20.6 | 0.00764 |
| 55 | 05-09-2023 | 16-PA-CF-612 A | Seal | Pump Seals | - | Pump Seal | 39.8 | 0.01142 |
| 56 | 05-09-2023 | 16-PA CF-1603 | Seal | Pump Seals | - | Pump Seal | 13.4 | 0.00588 |
| 57 | 05-09-2023 | 16-PA CF-1601 | Seal | Pump Seals | - | Pump Seal | 26.4 | 0.00889 |
| 58 | 05-09-2023 | 16-PA CF-1101 A | Seal | Pump Seals | - | Pump Seal | 30.9 | 0.00979 |
| 59 | 05-09-2023 | 16-PA CF-1101 B | Seal | Pump Seals | - | Pump Seal | 86.7 | 0.01836 |
| 60 | 05-09-2023 | 16-PA-CF-509 B (N) | Seal | Pump Seals | - | Pump Seal | 36.3 | 0.01080 |
| 61 | 05-09-2023 | 16-PA-CF-101 A(N) | Seal | Pump Seals | - | Pump Seal | 26.9 | 0.00899 |
| **Total VOC Emission from Pump Seals** | | | | | | | | **0.77932** |

**Total VOC Emission from HCU in September 2023 is 0.77932 kg/day**

# BHARAT PETROLEUM CORPORATION LIMITED, BINA-M.P.
## LDAR REPORT FOR THE MONTH OF SEPTEMBER 2023
**Monitoring - VOC** **Plant – CDU / VDU**

| S.No. | Date | Tag. No. | Equipment | Components | Line size (inch) | Location | Screening Value sv (ppm) | Estimated Emission Rate kg/day |
|---|---|---|---|---|---|---|---|---|
| 1 | 01-09-2023 | 11-PA-CF-101 A | Seal | Pump Seals | - | Pump Seal | 56.9 | 0.01420 |
| 2 | 01-09-2023 | 11-PA-CF-101 B | Seal | Pump Seals | - | Pump Seal | 6.3 | 0.00371 |
| 3 | 01-09-2023 | 13-PA-CF-102 A | Seal | Pump Seals | - | Pump Seal | 12.5 | 0.00564 |
| 4 | 01-09-2023 | 13-PA-CF-102 B | Seal | Pump Seals | - | Pump Seal | 63.4 | 0.01517 |
| 5 | 01-09-2023 | 13-PA-CF-101 A | Seal | Pump Seals | - | Pump Seal | 79.2 | 0.01738 |
| 6 | 01-09-2023 | 13-PA-CF-101 B | Seal | Pump Seals | - | Pump Seal | 30.8 | 0.00977 |
| 7 | 01-09-2023 | 12-PA-CF-108-A | Seal | Pump Seals | - | Pump Seal | 9.9 | 0.00489 |
| 8 | 01-09-2023 | 12-PA-CF-108-B | Seal | Pump Seals | - | Pump Seal | 102.3 | 0.02031 |
| 9 | 01-09-2023 | 12-PA-CF-104-A | Seal | Pump Seals | - | Pump Seal | 65.4 | 0.01546 |
| 10 | 01-09-2023 | 12-PA-CF-104-B | Seal | Pump Seals | - | Pump Seal | 3.2 | 0.00245 |
| 11 | 01-09-2023 | 11-PA-CF-113 A | Seal | Pump Seals | - | Pump Seal | 113.2 | 0.02161 |
| 12 | 01-09-2023 | 11-PA-CF-113 B | Seal | Pump Seals | - | Pump Seal | 61.2 | 0.01485 |
| 13 | 01-09-2023 | 11-PA-CF-112 A | Seal | Pump Seals | - | Pump Seal | 36.7 | 0.01087 |
| 14 | 01-09-2023 | 11-PA-CF-112 B | Seal | Pump Seals | - | Pump Seal | 89.4 | 0.01871 |
| 15 | 01-09-2023 | 11-PA-CF-128 A | Seal | Pump Seals | - | Pump Seal | 5.1 | 0.00326 |
| 16 | 01-09-2023 | 11-PA-CF-128 B | Seal | Pump Seals | - | Pump Seal | 163.2 | 0.02701 |
| 17 | 01-09-2023 | 11-PA-CF-111 A | Seal | Pump Seals | - | Pump Seal | 50.4 | 0.01319 |
| 18 | 01-09-2023 | 11-PA-CF-111 B | Seal | Pump Seals | - | Pump Seal | 3.9 | 0.00277 |
| 19 | 01-09-2023 | 11-PA-CF-108 A | Seal | Pump Seals | - | Pump Seal | 80.6 | 0.01756 |
| 20 | 01-09-2023 | 11-PA-CF-108 B | Seal | Pump Seals | - | Pump Seal | 23.1 | 0.00820 |
| 21 | 01-09-2023 | 11-PA-CF-105 A | Seal | Pump Seals | - | Pump Seal | 23.1 | 0.00820 |
| 22 | 01-09-2023 | 11-PA-CF-105 B | Seal | Pump Seals | - | Pump Seal | 83.1 | 0.01790 |
| 23 | 01-09-2023 | 12-PA-CF-104 A | Seal | Pump Seals | - | Pump Seal | 66.7 | 0.01565 |
| 24 | 01-09-2023 | 12-PA-CF-104 B | Seal | Pump Seals | - | Pump Seal | 89.4 | 0.01871 |
| 25 | 01-09-2023 | 12-PA-CF-102 A | Seal | Pump Seals | - | Pump Seal | 56.1 | 0.01408 |
| 26 | 01-09-2023 | 12-PA-CF-102 B | Seal | Pump Seals | - | Pump Seal | 20.8 | 0.00769 |
| 27 | 01-09-2023 | 12-PA-CF-112 A | Seal | Pump Seals | - | Pump Seal | 9.6 | 0.00480 |
| 28 | 01-09-2023 | 12-PA-CF-112 B | Seal | Pump Seals | - | Pump Seal | 5.4 | 0.00338 |
| 29 | 01-09-2023 | 12-PA-CF-109 A | Seal | Pump Seals | - | Pump Seal | 13.2 | 0.00583 |
| 30 | 01-09-2023 | 12-PA-CF-109 B | Seal | Pump Seals | - | Pump Seal | 6.1 | 0.00364 |
| 31 | 01-09-2023 | 12-PA-CF-101 A | Seal | Pump Seals | - | Pump Seal | 213.6 | 0.03183 |
| 32 | 01-09-2023 | 12-PA-CF-101 B | Seal | Pump Seals | - | Pump Seal | 40.3 | 0.01151 |
| 33 | 01-09-2023 | 11-PA-CF-103 A | Seal | Pump Seals | - | Pump Seal | 26.1 | 0.00883 |
| 34 | 01-09-2023 | 11-PA-CF-103 B | Seal | Pump Seals | - | Pump Seal | 2.6 | 0.00216 |
| 35 | 01-09-2023 | 11-PA-CF-106 A | Seal | Pump Seals | - | Pump Seal | 146.3 | 0.02527 |
| 36 | 01-09-2023 | 11-PA-CF-106 B | Seal | Pump Seals | - | Pump Seal | 2.2 | 0.00195 |
| 37 | 01-09-2023 | 11-PA-CF-107 A | Seal | Pump Seals | - | Pump Seal | 36.5 | 0.01083 |
| 38 | 01-09-2023 | 11-PA-CF-107 B | Seal | Pump Seals | - | Pump Seal | 13.2 | 0.00583 |
| 39 | 01-09-2023 | 11-PA-CF-109 A | Seal | Pump Seals | - | Pump Seal | 50.6 | 0.01322 |
| 40 | 01-09-2023 | 11-PA-CF-109 B | Seal | Pump Seals | - | Pump Seal | 13.2 | 0.00583 |
| 41 | 01-09-2023 | 12-PA-CF-110 A | Seal | Pump Seals | - | Pump Seal | 22.3 | 0.00802 |
| 42 | 01-09-2023 | 12-PA-CF-110 B | Seal | Pump Seals | - | Pump Seal | 63.5 | 0.01519 |
| 43 | 01-09-2023 | 11-PA-CF-1001 A | Seal | Pump Seals | - | Pump Seal | 9.4 | 0.00474 |
| 44 | 01-09-2023 | 11-PA-CF-1001 B | Seal | Pump Seals | - | Pump Seal | 15.6 | 0.00645 |
| 45 | 01-09-2023 | 12-PA-CF-113 C | Seal | Pump Seals | - | Pump Seal | 23.1 | 0.00820 |

# BHARAT PETROLEUM CORPORATION LIMITED, BINA-M.P.
## LDAR REPORT FOR THE MONTH OF SEPTEMBER 2023
### Monitoring - VOC Plant – CDU / VDU

| S.No. | Date | Tag. No. | Equipment | Components | Line size (inch) | Location | Screening Value sv (ppm) | Estimated Emission Rate kg/day |
|---|---|---|---|---|---|---|---|---|
| 46 | 01-09-2023 | 12-PA-CF-1002 A | Seal | Pump Seals | - | Pump Seal | 133.2 | 0.02386 |
| 47 | 01-09-2023 | 12-PA-CF-1002 B | Seal | Pump Seals | - | Pump Seal | 316.5 | 0.04046 |
| 48 | 01-09-2023 | 11-PA-CF-1002 A | Seal | Pump Seals | - | Pump Seal | 20.3 | 0.00757 |
| 49 | 01-09-2023 | 11-PA-CF-1002 B | Seal | Pump Seals | - | Pump Seal | 61.2 | 0.01485 |
| 50 | 01-09-2023 | 11-PA-CF-1002 C | Seal | Pump Seals | - | Pump Seal | 2.2 | 0.00195 |
| 51 | 01-09-2023 | 21-PA-CF-1001 A | Seal | Pump Seals | - | Pump Seal | 31.4 | 0.00988 |
| 52 | 01-09-2023 | 21-PA-CF-1001 B | Seal | Pump Seals | - | Pump Seal | 60.9 | 0.01480 |
| 53 | 01-09-2023 | 21-PA-CF-1003 A | Seal | Pump Seals | - | Pump Seal | 50.2 | 0.01316 |
| 54 | 01-09-2023 | 21-PA-CF-1003 B | Seal | Pump Seals | - | Pump Seal | 13.9 | 0.00601 |
| 55 | 01-09-2023 | 21-PA-CF-1002 A | Seal | Pump Seals | - | Pump Seal | 65.1 | 0.01542 |
| 56 | 01-09-2023 | 21-PA-CF-1002 B | Seal | Pump Seals | - | Pump Seal | 23.4 | 0.00826 |
| 57 | 01-09-2023 | 24-PA-MT-1001 A | Seal | Pump Seals | - | Pump Seal | 50.2 | 0.01316 |
| 58 | 01-09-2023 | 24-PA-MT-1001 B | Seal | Pump Seals | - | Pump Seal | 63.6 | 0.01520 |
| **Total VOC Emission from Pump Seals** | | | | | | | | **0.69132** |

**Total VOC emission from CDU/VDU in September 2023 is 0.69132 Kg/day**

# BHARAT PETROLEUM CORPORATION LIMITED, BINA-M.P.
## LDAR REPORT FOR THE MONTH OF SEPTEMBER 2023
### Monitoring - VOC Plant – MS BLOCK

| S.No. | Date | Tag. No. | Equipment | Components | Line size (inch) | Location | Screening Value sv (ppm) | Estimated Emission Rate kg/day |
|---|---|---|---|---|---|---|---|---|
| 1 | 02-09-2023 | 20-PA-CF-103 A | Seal | Pump Seals | - | Pump Seal | 89.7 | 0.01875 |
| 2 | 02-09-2023 | 20-PA-CF-103 B | Seal | Pump Seals | - | Pump Seal | 41.9 | 0.01179 |
| 3 | 02-09-2023 | 20-PA-CF-102 A | Seal | Pump Seals | - | Pump Seal | 64.2 | 0.00000 |
| 4 | 02-09-2023 | 20-PA-CF-102 B | Seal | Pump Seals | - | Pump Seal | 13.8 | 0.00599 |
| 5 | 02-09-2023 | 19-PA-CF-106 A | Seal | Pump Seals | - | Pump Seal | 90.1 | 0.01880 |
| 6 | 02-09-2023 | 19-PA-CF-106 B | Seal | Pump Seals | - | Pump Seal | 25.6 | 0.00873 |
| 7 | 02-09-2023 | 19-PA-CF-104 A | Seal | Pump Seals | - | Pump Seal | 34.1 | 0.01039 |
| 8 | 02-09-2023 | 19-PA-CF-104 B | Seal | Pump Seals | - | Pump Seal | 20.8 | 0.00769 |
| 9 | 02-09-2023 | 19-PA-CF-103 A | Seal | Pump Seals | - | Pump Seal | 73.5 | 0.01660 |
| 10 | 02-09-2023 | 19-PA-CF-103 B | Seal | Pump Seals | - | Pump Seal | 2.4 | 0.00206 |
| 11 | 02-09-2023 | 19-PA-CF-101 A | Seal | Pump Seals | - | Pump Seal | 63.1 | 0.01513 |
| 12 | 02-09-2023 | 19-PA-CF-101 B | Seal | Pump Seals | - | Pump Seal | 20.8 | 0.00769 |
| 13 | 02-09-2023 | 19-PA-CF-105 A | Seal | Pump Seals | - | Pump Seal | 70.1 | 0.01613 |
| 14 | 02-09-2023 | 19-PA-CF-105 B | Seal | Pump Seals | - | Pump Seal | 22.8 | 0.00813 |
| 15 | 02-09-2023 | 20-PA-CF-101 A | Seal | Pump Seals | - | Pump Seal | 93.1 | 0.01918 |
| 16 | 02-09-2023 | 20-PA-CF-101 B | Seal | Pump Seals | - | Pump Seal | 20.5 | 0.00762 |
| 17 | 02-09-2023 | 15-PA-CF-231 A | Seal | Pump Seals | - | Pump Seal | 33.7 | 0.01032 |
| 18 | 02-09-2023 | 15-PA-CF-231 B | Seal | Pump Seals | - | Pump Seal | 41.8 | 0.01177 |
| 19 | 02-09-2023 | 15-PA-CF-201 A | Seal | Pump Seals | - | Pump Seal | 91.4 | 0.01897 |
| 20 | 02-09-2023 | 15-PA-CF-201 B | Seal | Pump Seals | - | Pump Seal | 23.5 | 0.00828 |
| 21 | 02-09-2023 | 15-PA-CF-202 A | Seal | Pump Seals | - | Pump Seal | 6.1 | 0.00364 |
| 22 | 02-09-2023 | 15-PA-CF-202 B | Seal | Pump Seals | - | Pump Seal | 14.2 | 0.00609 |
| 23 | 02-09-2023 | 15-PA-CF-208 A | Seal | Pump Seals | - | Pump Seal | 3.8 | 0.00273 |
| 24 | 02-09-2023 | 15-PA-CF-208 B | Seal | Pump Seals | - | Pump Seal | 91.7 | 0.01900 |
| 25 | 02-09-2023 | 15-PA-CF-206 A | Seal | Pump Seals | - | Pump Seal | 25.1 | 0.00862 |
| 26 | 02-09-2023 | 15-PA-CF-206 B | Seal | Pump Seals | - | Pump Seal | 22.1 | 0.00798 |
| 27 | 02-09-2023 | 15-PA-CF-207 A | Seal | Pump Seals | - | Pump Seal | 60.7 | 0.01477 |
| 28 | 02-09-2023 | 15-PA-CF-207 B | Seal | Pump Seals | - | Pump Seal | 83.1 | 0.01790 |
| 29 | 02-09-2023 | 15-PA-CF-220 A | Seal | Pump Seals | - | Pump Seal | 56.4 | 0.01413 |
| 30 | 02-09-2023 | 15-PA-CF-220 B | Seal | Pump Seals | - | Pump Seal | 20.1 | 0.00753 |
| 31 | 02-09-2023 | 15-PA-CF-220 C | Seal | Pump Seals | - | Pump Seal | 80.9 | 0.01760 |
| 32 | 02-09-2023 | 15-PA-CF-209 A | Seal | Pump Seals | - | Pump Seal | 8.8 | 0.00455 |
| 33 | 02-09-2023 | 15-PA-CF-209 B | Seal | Pump Seals | - | Pump Seal | 36.4 | 0.01082 |
| 34 | 02-09-2023 | 15-PA-CF-210 A | Seal | Pump Seals | - | Pump Seal | 15.2 | 0.00635 |
| 35 | 02-09-2023 | 15-PA-CF-210 B | Seal | Pump Seals | - | Pump Seal | 20.7 | 0.00767 |
| 36 | 02-09-2023 | 15-PA-CF-205 A | Seal | Pump Seals | - | Pump Seal | 89.4 | 0.01871 |
| 37 | 02-09-2023 | 15-PA-CF-205 B | Seal | Pump Seals | - | Pump Seal | 61.7 | 0.01492 |
| 38 | 02-09-2023 | 19-PA-CF-1101 A | Seal | Pump Seals | - | Pump Seal | 80.1 | 0.01750 |
| 39 | 02-09-2023 | 19-PA-CF-1101 B | Seal | Pump Seals | - | Pump Seal | 2.9 | 0.00231 |
| 40 | 02-09-2023 | 20-PA-CF-1105 A | Seal | Pump Seals | - | Pump Seal | 83.4 | 0.01793 |
| 41 | 02-09-2023 | 20-PA-CF-1105 B | Seal | Pump Seals | - | Pump Seal | 4.1 | 0.00285 |
| 42 | 02-09-2023 | 15-PA-CF-1211 A | Seal | Pump Seals | - | Pump Seal | 33.9 | 0.01036 |
| 43 | 02-09-2023 | 15-PA-CF-1211 B | Seal | Pump Seals | - | Pump Seal | 80.4 | 0.01754 |
| 44 | 02-09-2023 | 15-PA-CF-1251 A | Seal | Pump Seals | - | Pump Seal | 13.2 | 0.00583 |

# BHARAT PETROLEUM CORPORATION LIMITED, BINA-M.P.
## LDAR REPORT FOR THE MONTH OF SEPTEMBER 2023
### Monitoring - VOC Plant – MS BLOCK

| S.No. | Date | Tag. No. | Equipment | Components | Line size (inch) | Location | Screening Value sv (ppm) | Estimated Emission Rate kg/day |
|---|---|---|---|---|---|---|---|---|
| 45 | 02-09-2023 | 15-PA-CF-1251 B | Seal | Pump Seals | - | Pump Seal | 33.2 | 0.01023 |
| 46 | 02-09-2023 | 15N-PA-CF-1203 B | Seal | Pump Seals | - | Pump Seal | 61.2 | 0.01485 |
| 47 | 02-09-2023 | 15N-PA-CF-1203 A | Seal | Pump Seals | - | Pump Seal | 32.7 | 0.00000 |
| 48 | 02-09-2023 | 15N-PA-CF- 1204 B | Seal | Pump Seals | - | Pump Seal | 83.1 | 0.01790 |
| 49 | 02-09-2023 | 15N-PA-CF-1204 A | Seal | Pump Seals | - | Pump Seal | 6.4 | 0.00375 |
| 50 | 02-09-2023 | 15N-PA-CF-1205 A | Seal | Pump Seals | - | Pump Seal | 13.2 | 0.00583 |
| 51 | 02-09-2023 | 15N-PA-CF-1205 B | Seal | Pump Seals | - | Pump Seal | 30.9 | 0.00979 |
| 52 | 02-09-2023 | 15N-PA-CF-1202 B | Seal | Pump Seals | - | Pump Seal | 86.4 | 0.01833 |
| 53 | 02-09-2023 | 15N-PA-CF-1202 A | Seal | Pump Seals | - | Pump Seal | 2.7 | 0.00221 |
| 54 | 02-09-2023 | 15N-PA-CF-1201 B | Seal | Pump Seals | - | Pump Seal | 36.1 | 0.01076 |
| 55 | 02-09-2023 | 15N-PA-CF-1201A | Seal | Pump Seals | - | Pump Seal | 24.8 | 0.00856 |
| **Total VOC Emission from Pump Seals** | | | | | | | | **0.58351** |

**Total VOC Emission from MS Block in September 2023 is 0.58351 kg/day**

# BHARAT PETROLEUM CORPORATION LIMITED, BINA-M.P.
## LDAR REPORT FOR THE MONTH OF SEPTEMBER 2023
**Monitoring - VOC** **Plant – SRU**

| S.No. | Date | Tag. No. | Equipment | Components | Line size (inch) | Location | Screening Value sv (ppm) | Estimated Emission Rate kg/day |
|---|---|---|---|---|---|---|---|---|
| 1 | 06-09-2023 | 29-PA-CF-010 A | Seal | Pump Seals | - | Pump Seal | 23.8 | 0.00835 |
| 2 | 06-09-2023 | 29-PA-CF-010 B | Seal | Pump Seals | - | Pump Seal | 91.7 | 0.01900 |
| 3 | 06-09-2023 | 29-PA-CF-011 A | Seal | Pump Seals | - | Pump Seal | 26.8 | 0.00897 |
| 4 | 06-09-2023 | 29-PA-CF-011 B | Seal | Pump Seals | - | Pump Seal | 93.1 | 0.01918 |
| 5 | 06-09-2023 | 29-PA-CF-008 A | Seal | Pump Seals | - | Pump Seal | 20.6 | 0.00764 |
| 6 | 06-09-2023 | 29-PA-CF-008 B | Seal | Pump Seals | - | Pump Seal | 3.5 | 0.00259 |
| 7 | 06-09-2023 | 29-PA-CF-007 | Seal | Pump Seals | - | Pump Seal | 26.4 | 0.00889 |
| 8 | 06-09-2023 | 29-PA-CF-006 A | Seal | Pump Seals | - | Pump Seal | 3.8 | 0.00273 |
| 9 | 06-09-2023 | 29-PA-CF-006 B | Seal | Pump Seals | - | Pump Seal | 91.4 | 0.01897 |
| 10 | 06-09-2023 | 28-PA-CF-102 A | Seal | Pump Seals | - | Pump Seal | 279.6 | 0.03751 |
| 11 | 06-09-2023 | 28-PA-CF-102 B | Seal | Pump Seals | - | Pump Seal | 35.2 | 0.01060 |
| 12 | 06-09-2023 | 28-PA-CF-102 C | Seal | Pump Seals | - | Pump Seal | 10.5 | 0.00507 |
| 13 | 06-09-2023 | 28-PA-CF-103 A | Seal | Pump Seals | - | Pump Seal | 46.3 | 0.01253 |
| 14 | 06-09-2023 | 28-PA-CF-103 B | Seal | Pump Seals | - | Pump Seal | 33.2 | 0.01023 |
| 15 | 06-09-2023 | 28-PA-CF-202 A | Seal | Pump Seals | - | Pump Seal | 70.1 | 0.01613 |
| 16 | 06-09-2023 | 28-PA-CF-202 B | Seal | Pump Seals | - | Pump Seal | 46.2 | 0.01251 |
| 17 | 06-09-2023 | 28-PA-CF-203 A | Seal | Pump Seals | - | Pump Seal | 89.6 | 0.01874 |
| 18 | 06-09-2023 | 28-PA-CF-203 B | Seal | Pump Seals | - | Pump Seal | 34.1 | 0.01039 |
| 19 | 06-09-2023 | 28-PA-CF-204 A | Seal | Pump Seals | - | Pump Seal | 20.6 | 0.00764 |
| 20 | 06-09-2023 | 28-PA-CF-204 B | Seal | Pump Seals | - | Pump Seal | 35.1 | 0.01058 |
| 21 | 06-09-2023 | 28-PA-CF-204 C | Seal | Pump Seals | - | Pump Seal | 20.4 | 0.00760 |
| 22 | 06-09-2023 | 29-PA-CF-002 A | Seal | Pump Seals | - | Pump Seal | 36.9 | 0.01091 |
| 23 | 06-09-2023 | 29-PA-CF-002 B | Seal | Pump Seals | - | Pump Seal | 80.7 | 0.01758 |
| 24 | 06-09-2023 | 29-PA-CF-002 C | Seal | Pump Seals | - | Pump Seal | 56.2 | 0.01410 |
| 25 | 06-09-2023 | 29-PA-CF-002 D | Seal | Pump Seals | - | Pump Seal | 36.9 | 0.01091 |
| 26 | 06-09-2023 | 27-PA-CF-102 A | Seal | Pump Seals | - | Pump Seal | 63.6 | 0.01520 |
| 27 | 06-09-2023 | 27-PA-CF-102 B | Seal | Pump Seals | - | Pump Seal | 34.1 | 0.01039 |
| 28 | 06-09-2023 | 29-PA-CF-009 A | Seal | Pump Seals | - | Pump Seal | 20.8 | 0.00769 |
| 29 | 06-09-2023 | 29-PA-CF-009 B | Seal | Pump Seals | - | Pump Seal | 93.4 | 0.01922 |
| 30 | 06-09-2023 | 29-PA-CF-009 C | Seal | Pump Seals | - | Pump Seal | 26.5 | 0.00891 |
| 31 | 06-09-2023 | 27-PA-CF-101 A | Seal | Pump Seals | - | Pump Seal | 63.6 | 0.01520 |
| 32 | 06-09-2023 | 27-PA-CF-101 B | Seal | Pump Seals | - | Pump Seal | 60.8 | 0.01479 |
| 33 | 06-09-2023 | 27-PA-CF-103 A | Seal | Pump Seals | - | Pump Seal | 46.1 | 0.01249 |
| 34 | 06-09-2023 | 27-PA-CF-103 B | Seal | Pump Seals | - | Pump Seal | 23.9 | 0.00837 |
| 35 | 06-09-2023 | 29-PA-MT-1001 A | Seal | Pump Seals | - | Pump Seal | 23.9 | 0.00837 |
| 36 | 06-09-2023 | 29-PA-MT-1001 B | Seal | Pump Seals | - | Pump Seal | 80.6 | 0.01756 |
| 37 | 06-09-2023 | 29-PA-MT-1001 C | Seal | Pump Seals | - | Pump Seal | 36.7 | 0.01087 |
| | | | | | | | **Total VOC Emission from Pump Seals** | **0.45838** |

**Total VOC Emission from SRU in September 2023 is 0.45838 kg/day**

# BHARAT PETROLEUM CORPORATION LIMITED, BINA-M.P.
## LDAR REPORT FOR THE MONTH OF SEPTEMBER 2023
**Monitoring - VOC** **Plant – DCU**

| S.No. | Date | Tag. No. | Equipment | Component | Line size (inch) | Location | Screening Value sv (ppm) | Estimated Emission Rate kg/day |
|---|---|---|---|---|---|---|---|---|
| 1 | 04-09-2023 | 14-PA-CF-101-B | Seal | Pump Seals | - | Pump Seal | 96.8 | 0.01964 |
| 2 | 04-09-2023 | 14-PA-CF-101-A | Seal | Pump Seals | - | Pump Seal | 2.1 | 0.00190 |
| 3 | 04-09-2023 | 14-PA-CF-108-B | Seal | Pump Seals | - | Pump Seal | 87.4 | 0.01845 |
| 4 | 04-09-2023 | 14-PA-CF-108-A | Seal | Pump Seals | - | Pump Seal | 23.8 | 0.00835 |
| 5 | 04-09-2023 | 14-PA-CF-141-B | Seal | Pump Seals | - | Pump Seal | 91.4 | 0.01897 |
| 6 | 04-09-2023 | 14-PA-CF-141-A | Seal | Pump Seals | - | Pump Seal | 25.4 | 0.00868 |
| 7 | 04-09-2023 | 14-PA-CF-105-B | Seal | Pump Seals | - | Pump Seal | 60.1 | 0.01469 |
| 8 | 04-09-2023 | 14-PA-CF-105-A | Seal | Pump Seals | - | Pump Seal | 23.7 | 0.00832 |
| 9 | 04-09-2023 | 14-PA-CF-122-B | Seal | Pump Seals | - | Pump Seal | 46.8 | 0.01261 |
| 10 | 04-09-2023 | 14-PA-CF-122-A | Seal | Pump Seals | - | Pump Seal | 93.1 | 0.01918 |
| 11 | 04-09-2023 | 14-PA-CF-121-B | Seal | Pump Seals | - | Pump Seal | 24.6 | 0.00852 |
| 12 | 04-09-2023 | 14-PA-CF-121-A | Seal | Pump Seals | - | Pump Seal | 55.4 | 0.01397 |
| 13 | 04-09-2023 | 14-PA-CF-106-B | Seal | Pump Seals | - | Pump Seal | 13.8 | 0.00599 |
| 14 | 04-09-2023 | 14-PA-CF-106-A | Seal | Pump Seals | - | Pump Seal | 71.4 | 0.01631 |
| 15 | 04-09-2023 | 14-PA-CF-107-B | Seal | Pump Seals | - | Pump Seal | 69.9 | 0.01610 |
| 16 | 04-09-2023 | 14-PA-CF-107-A | Seal | Pump Seals | - | Pump Seal | 8.5 | 0.00445 |
| 17 | 04-09-2023 | 14-PA-CF-104-B | Seal | Pump Seals | - | Pump Seal | 69.7 | 0.01608 |
| 18 | 04-09-2023 | 14-PA-CF-104-A | Seal | Pump Seals | - | Pump Seal | 23.1 | 0.00820 |
| 19 | 04-09-2023 | 14-PA-CF-102-B | Seal | Pump Seals | - | Pump Seal | 63.2 | 0.01514 |
| 20 | 04-09-2023 | 14-PA-CF-102-A | Seal | Pump Seals | - | Pump Seal | 11.8 | 0.00544 |
| 21 | 04-09-2023 | 14-PA-CF-109-B | Seal | Pump Seals | - | Pump Seal | 10.4 | 0.00504 |
| 22 | 04-09-2023 | 14-PA-CF-109-A | Seal | Pump Seals | - | Pump Seal | 59.8 | 0.01464 |
| 23 | 04-09-2023 | 14-PA-CF-111-B | Seal | Pump Seals | - | Pump Seal | 63.7 | 0.01522 |
| 24 | 04-09-2023 | 14-PA-CF-111-A | Seal | Pump Seals | - | Pump Seal | 80.4 | 0.01754 |
| 25 | 04-09-2023 | 14-PA-CF-113-B | Seal | Pump Seals | - | Pump Seal | 13.2 | 0.00583 |
| 26 | 04-09-2023 | 14-PA-CF-113-A | Seal | Pump Seals | - | Pump Seal | 66.7 | 0.01565 |
| 27 | 04-09-2023 | 14-PA-CF-112-B | Seal | Pump Seals | - | Pump Seal | 3.9 | 0.00277 |
| 28 | 04-09-2023 | 14-PA-CF-112-A | Seal | Pump Seals | - | Pump Seal | 56.4 | 0.01413 |
| 29 | 04-09-2023 | 14-PA-CF-1002 A | Seal | Pump Seals | - | Pump Seal | 23.1 | 0.00820 |
| 30 | 04-09-2023 | 14-PA-CF-1002 B | Seal | Pump Seals | - | Pump Seal | 60.2 | 0.01470 |
| 31 | 04-09-2023 | 14-PA-CF-1001 A | Seal | Pump Seals | - | Pump Seal | 36.7 | 0.01087 |
| 32 | 04-09-2023 | 14-PA-CF-1001 B | Seal | Pump Seals | - | Pump Seal | 84.6 | 0.01809 |
| 33 | 04-09-2023 | 14-PA-CF-121 (N) C | Seal | Pump Seals | - | Pump Seal | 33.9 | 0.01036 |
| | | | | | | | **Total VOC Emission from Pump Seals** | **0.39400** |

**Total VOC Emission from DCU in September 2023 is 0.39400 kg/day**

## BHARAT PETROLEUM CORPORATION LIMITED, BINA-M.P.
## LDAR REPORT FOR THE MONTH OF SEPTEMBER 2023

**Monitoring - VOC** **Plant – OFFSITE**

| S.No. | Date | Tag. No. | Equipment | Components | Line size (inch) | Location | Screening Value sv (ppm) | Estimated Emission Rate kg/day |
|---|---|---|---|---|---|---|---|---|
| 1 | 06-09-2023 | 52-PA-CF-005 B | Seal | Pump Seals | - | Pump Seal | 89.7 | 0.01875 |
| 2 | 06-09-2023 | 52-PA-CF-005 A | Seal | Pump Seals | - | Pump Seal | 63.1 | 0.01513 |
| 3 | 06-09-2023 | 52-PA-CF-021 B | Seal | Pump Seals | - | Pump Seal | 24.9 | 0.00858 |
| 4 | 06-09-2023 | 52-PA-CF-021 A | Seal | Pump Seals | - | Pump Seal | 3.8 | 0.00273 |
| 5 | 06-09-2023 | 52-PA-CF-018 | Seal | Pump Seals | - | Pump Seal | 91.2 | 0.01894 |
| 6 | 06-09-2023 | 52-PA-CF-016 B | Seal | Pump Seals | - | Pump Seal | 36.4 | 0.01082 |
| 7 | 06-09-2023 | 52-PA-CF-016 A | Seal | Pump Seals | - | Pump Seal | 80.4 | 0.01754 |
| 8 | 06-09-2023 | 52-PA-CF-08 B | Seal | Pump Seals | - | Pump Seal | 16.3 | 0.00663 |
| 9 | 06-09-2023 | 52-PA-CF-08 A | Seal | Pump Seals | - | Pump Seal | 83.4 | 0.01793 |
| 10 | 06-09-2023 | 52-PA-CF-011 B | Seal | Pump Seals | - | Pump Seal | 46.9 | 0.01262 |
| 11 | 06-09-2023 | 52-PA-CF-011 A | Seal | Pump Seals | - | Pump Seal | 90.1 | 0.01880 |
| 12 | 06-09-2023 | 52-PA-CF-012 B | Seal | Pump Seals | - | Pump Seal | 25.4 | 0.00868 |
| 13 | 06-09-2023 | 52-PA-CF-012 A | Seal | Pump Seals | - | Pump Seal | 77.3 | 0.01712 |
| 14 | 06-09-2023 | 52-PA-CF-014 B | Seal | Pump Seals | - | Pump Seal | 63.2 | 0.01514 |
| 15 | 06-09-2023 | 52-PA-CF-014 A | Seal | Pump Seals | - | Pump Seal | 91.2 | 0.01894 |
| 16 | 06-09-2023 | 52-PA-CF-013 B | Seal | Pump Seals | - | Pump Seal | 22.8 | 0.00813 |
| 17 | 06-09-2023 | 52-PA-CF-013 A | Seal | Pump Seals | - | Pump Seal | 93.4 | 0.01922 |
| 18 | 06-09-2023 | 52-PA-CF-09 B | Seal | Pump Seals | - | Pump Seal | 26.3 | 0.00887 |
| 19 | 06-09-2023 | 52-PA-CF-09 A | Seal | Pump Seals | - | Pump Seal | 21.3 | 0.00780 |
| 20 | 06-09-2023 | 52-PA-CF-017 B | Seal | Pump Seals | - | Pump Seal | 63.7 | 0.01522 |
| 21 | 06-09-2023 | 52-PA-CF-017 A | Seal | Pump Seals | - | Pump Seal | 9.7 | 0.00483 |
| 22 | 06-09-2023 | 52-PA-CF-003 B | Seal | Pump Seals | - | Pump Seal | 48.1 | 0.01282 |
| | | | | | | | **Total VOC Emission from Pump Seals** | **0.28523** |

**Total VOC Emission from Offsite in September 2023 is 0.28523 kg/day**

## BHARAT PETROLEUM CORPORATION LIMITED, BINA-M.P.
## LDAR REPORT FOR THE MONTH OF SEPTEMBER 2023

**Monitoring - VOC** **Plant – HGU**

| S.No. | Date | Tag. No. | Equipment | Components | Line size (inch) | Location | Screening Value sv (ppm) | Estimated Emission Rate kg/day |
|---|---|---|---|---|---|---|---|---|
| 1 | 04-09-2023 | 18-PA-CF-11 A | Seal | Pump Seals | - | Pump Seal | 23.7 | 0.00832 |
| 2 | 04-09-2023 | 18-PA-CF-11 B | Seal | Pump Seals | - | Pump Seal | 82.1 | 0.01776 |
| | | | | | | | **Total VOC Emission from Pump Seals** | **0.02609** |

**Total VOC Emission from HGU in September 2023 is 0.02609 kg/day**

## BHARAT PETROLEUM CORPORATION LIMITED, BINA-M.P.
## LDAR REPORT FOR THE MONTH OF SEPTEMBER 2023

**Monitoring - VOC** **Plant – ETP**

| S.No. | Date | Tag. No. | Equipment | Components | Line size (inch) | Location | Screening Value sv (ppm) | Estimated Emission Rate kg/day |
|---|---|---|---|---|---|---|---|---|
| 1 | 08-09-2023 | 056-P-36 A | Seal | Pump Seals | - | Pump Seal | 69.2 | 0.01600 |
| 2 | 08-09-2023 | 056-P-36 B | Seal | Pump Seals | - | Pump Seal | 13.7 | 0.00596 |
| **Total VOC Emission from Pump Seals** | | | | | | | | **0.02196** |

**Total VOC Emission from ETP in September 2023 is 0.02196 kg/day**

# BHARAT PETROLEUM CORPORATION LIMITED, BINA-M.P.
## LDAR REPORT FOR THE MONTH OF SEPTEMBER 2023
**Monitoring - VOC** **Plant – KHDS**

| S.No. | Date | Tag. No. | Equipment | Component | Line size (inch) | Location | Screening Value sv (ppm) | Estimated Emission Rate kg/day |
|---|---|---|---|---|---|---|---|---|
| 1 | 05-09-2023 | 17-PA-CF-103 A | Seal | Pump Seals | - | Pump Seal | 61.7 | 0.01492 |
| 2 | 05-09-2023 | 17-PA-CF-103 B | Seal | Pump Seals | - | Pump Seal | 15.9 | 0.00653 |
| 3 | 05-09-2023 | 17-PA-RP-107 A | Seal | Pump Seals | - | Pump Seal | 24.5 | 0.00850 |
| 4 | 05-09-2023 | 17-PA-RP-107 B | Seal | Pump Seals | - | Pump Seal | 22.8 | 0.00813 |
| 5 | 05-09-2023 | 17-PA-RP-108 A | Seal | Pump Seals | - | Pump Seal | 93.5 | 0.01923 |
| 6 | 05-09-2023 | 17-PA-RP-108 B | Seal | Pump Seals | - | Pump Seal | 66.7 | 0.01565 |
| 7 | 05-09-2023 | 17-PA-CF-104 A | Seal | Pump Seals | - | Pump Seal | 80.1 | 0.01750 |
| 8 | 05-09-2023 | 17-PA-CF-104 B | Seal | Pump Seals | - | Pump Seal | 246.3 | 0.03472 |
| 9 | 05-09-2023 | 17-PA-CF-106 A | Seal | Pump Seals | - | Pump Seal | 30.9 | 0.00979 |
| 10 | 05-09-2023 | 17-PA-CF-106 B | Seal | Pump Seals | - | Pump Seal | 64.1 | 0.01527 |
| 11 | 05-09-2023 | 17-PA-CF-101 A | Seal | Pump Seals | - | Pump Seal | 52.8 | 0.01357 |
| 12 | 05-09-2023 | 17-PA-CF-101 B | Seal | Pump Seals | - | Pump Seal | 99.6 | 0.01999 |
| 13 | 05-09-2023 | 17-PA-RP-102 A | Seal | Pump Seals | - | Pump Seal | 31.4 | 0.00988 |
| 14 | 05-09-2023 | 17-PA-RP-102 B | Seal | Pump Seals | - | Pump Seal | 20.6 | 0.00764 |
| 15 | 05-09-2023 | 17-PA-MT-125 A | Seal | Pump Seals | - | Pump Seal | 32.8 | 0.01015 |
| 16 | 05-09-2023 | 17-PA-MT-125 B | Seal | Pump Seals | - | Pump Seal | 93.1 | 0.01918 |
| 17 | 05-09-2023 | 17-PA-MT-124 A | Seal | Pump Seals | - | Pump Seal | 22.7 | 0.00811 |
| 18 | 05-09-2023 | 17-PA-MT-124 B | Seal | Pump Seals | - | Pump Seal | 89.6 | 0.01874 |
| 19 | 05-09-2023 | 17-PA-MT-123 A | Seal | Pump Seals | - | Pump Seal | 12.6 | 0.00566 |
| 20 | 05-09-2023 | 17-PA-MT-123 B | Seal | Pump Seals | - | Pump Seal | 17.8 | 0.00699 |
| 21 | 05-09-2023 | 17-PA-RP-105 A | Seal | Pump Seals | - | Pump Seal | 56.6 | 0.01416 |
| 22 | 05-09-2023 | 17-PA-RP-105 B | Seal | Pump Seals | - | Pump Seal | 14.2 | 0.00609 |
| 23 | 05-09-2023 | 17-PA-SM-121 A | Seal | Pump Seals | - | Pump Seal | 19.9 | 0.00748 |
| 24 | 05-09-2023 | 17-PA-SM-121 B | Seal | Pump Seals | - | Pump Seal | 22.1 | 0.00798 |
| **Total VOC Emission from Pump Seals** | | | | | | | | **0.30585** |

**Total VOC Emission from KHDS in September 2023 is 0.30585 kg/day**

# LDAR VOC QUARTERLY MONITORING

## JULY 2023
## TO
## SEPTEMBER 2023

# BHARAT PETROLEUM CORPORATION LIMITED, BINA-M.P.
## LDAR QUARTERLY REPORT FOR JULY 2023 TO SEPTEMBER 2023
### Monitoring - VOC Plant – BDT

| S.No. | Date | Tag. No. | Equipment | Component | Line size (inch) | Location | Screening Value sv (ppm) | Estimated Emission Rate kg/day |
|---|---|---|---|---|---|---|---|---|
| COMPONENT - VALVE | | | | | | | | |
| 1 | 29-08-2023 | 70-PA-CF-15 A | Pump Valve | Valve | 6 | Suc. Valve | 80.4 | 0.00145 |
| 2 | 29-08-2023 | 70-PA-CF-15 B | Pump Valve | Valve | 6 | Suc. Valve | 123.6 | 0.00200 |
| 3 | 29-08-2023 | 70-PA-CF-15 C | Pump Valve | Valve | 6 | Suc. Valve | 62.1 | 0.00120 |
| 4 | 29-08-2023 | 70-PA-CF-13 D | Pump Valve | Valve | 10 | Suc. Valve | 80.6 | 0.00145 |
| 5 | 29-08-2023 | 70-PA-CF-13 C | Pump Valve | Valve | 10 | Suc. Valve | 13.4 | 0.00038 |
| 6 | 29-08-2023 | 70-PA-CF-13 B | Pump Valve | Valve | 10 | Suc. Valve | 70.9 | 0.00132 |
| 7 | 29-08-2023 | 70-PA-CF-13 A | Pump Valve | Valve | 10 | Suc. Valve | 216.8 | 0.00304 |
| 8 | 29-08-2023 | 70-PA-CF-9 C | Pump Valve | Valve | 10 | Suc. Valve | 93.4 | 0.00162 |
| 9 | 29-08-2023 | 70-PA-CF-9 B | Pump Valve | Valve | 10 | Suc. Valve | 60.1 | 0.00117 |
| 10 | 29-08-2023 | 70-PA-CF-9 A | Pump Valve | Valve | 10 | Suc. Valve | 23.9 | 0.00059 |
| 11 | 29-08-2023 | 70-PA-CF-3 B | Pump Valve | Valve | 10 | Suc. Valve | 83.4 | 0.00149 |
| 12 | 29-08-2023 | 70-PA-CF-3 A | Pump Valve | Valve | 10 | Suc. Valve | 15.9 | 0.00043 |
| 13 | 29-08-2023 | 70-PA-CF-11 C | Pump Valve | Valve | 10 | Suc. Valve | 86.7 | 0.00153 |
| 14 | 29-08-2023 | 70-PA-CF-11 B | Pump Valve | Valve | 10 | Suc. Valve | 63.9 | 0.00122 |
| 15 | 29-08-2023 | 70-PA-CF-11 A | Pump Valve | Valve | 10 | Suc. Valve | 50.3 | 0.00102 |
| 16 | 29-08-2023 | 70-PA-CF-10 A | Pump Valve | Valve | 10 | Suc. Valve | 62.8 | 0.00121 |
| 17 | 29-08-2023 | 70-PA-CF-10 B | Pump Valve | Valve | 10 | Suc. Valve | 346.8 | 0.00431 |
| 18 | 29-08-2023 | 70-PA-CF-10 C | Pump Valve | Valve | 10 | Suc. Valve | 913.2 | 0.00888 |
| 19 | 29-08-2023 | 70-PA-CF-4 A | Pump Valve | Valve | 10 | Suc. Valve | 3.4 | 0.00014 |
| 20 | 29-08-2023 | 70-PA-CF-4 B | Pump Valve | Valve | 10 | Suc. Valve | 70.1 | 0.00131 |
| 21 | 29-08-2023 | 70-PA-CF-4 C | Pump Valve | Valve | 10 | Suc. Valve | 23.6 | 0.00058 |
| 22 | 29-08-2023 | 70-PA-CF-4 D | Pump Valve | Valve | 10 | Suc. Valve | 623.2 | 0.00668 |
| 23 | 29-08-2023 | 70-PA-CF-4 E | Pump Valve | Valve | 10 | Suc. Valve | 20.3 | 0.00052 |
| 24 | 29-08-2023 | 70-PA-CF-12 A | Pump Valve | Valve | 10 | Suc. Valve | 63.2 | 0.00121 |
| 25 | 29-08-2023 | 70-PA-CF-12 B | Pump Valve | Valve | 10 | Suc. Valve | 20.1 | 0.00052 |
| 26 | 29-08-2023 | 70-PA-CF-12 C | Pump Valve | Valve | 10 | Suc. Valve | 46.5 | 0.00096 |
| 27 | 29-08-2023 | 70-PA-CF-12 D | Pump Valve | Valve | 10 | Suc. Valve | 23.8 | 0.00058 |
| 28 | 29-08-2023 | 70-PA-CF-12 E | Pump Valve | Valve | 10 | Suc. Valve | 90.4 | 0.00158 |
| 29 | 29-08-2023 | 70-PA-CF-8 C | Pump Valve | Valve | 10 | Suc. Valve | 23.6 | 0.00058 |
| 30 | 29-08-2023 | 70-PA-CF-8 B | Pump Valve | Valve | 10 | Suc. Valve | 50.2 | 0.00102 |
| 31 | 29-08-2023 | 70-PA-CF-8 A | Pump Valve | Valve | 10 | Suc. Valve | 79.4 | 0.00144 |
| 32 | 29-08-2023 | 70-PA-CF-2 E | Pump Valve | Valve | 10 | Suc. Valve | 156.2 | 0.00238 |
| 33 | 29-08-2023 | 70-PA-CF-2 D | Pump Valve | Valve | 10 | Suc. Valve | 36.6 | 0.00081 |
| 34 | 29-08-2023 | 70-PA-CF-2 C | Pump Valve | Valve | 10 | Suc. Valve | 326.5 | 0.00412 |
| 35 | 29-08-2023 | 70-PA-CF-2 B | Pump Valve | Valve | 10 | Suc. Valve | 80.4 | 0.00145 |
| 36 | 29-08-2023 | 70-PA-CF-2 A | Pump Valve | Valve | 10 | Suc. Valve | 23.6 | 0.00058 |
| 37 | 29-08-2023 | 70-PA-CF-6 E | Pump Valve | Valve | 10 | Suc. Valve | 13.2 | 0.00038 |
| 38 | 29-08-2023 | 70-PA-CF-6 D | Pump Valve | Valve | 10 | Suc. Valve | 30.6 | 0.00071 |
| 39 | 29-08-2023 | 70-PA-CF-6 C | Pump Valve | Valve | 10 | Suc. Valve | 40.1 | 0.00086 |
| 40 | 29-08-2023 | 70-PA-CF-6 B | Pump Valve | Valve | 10 | Suc. Valve | 23.5 | 0.00058 |
| 41 | 29-08-2023 | 70-PA-CF-6 A | Pump Valve | Valve | 10 | Suc. Valve | 60.2 | 0.00117 |
| 42 | 29-08-2023 | 70-PA-CF-7 A | Pump Valve | Valve | 10 | Suc. Valve | 36.1 | 0.00080 |
| 43 | 29-08-2023 | 70-PA-CF-7 B | Pump Valve | Valve | 10 | Suc. Valve | 20.5 | 0.00052 |
| 44 | 29-08-2023 | 70-PA-CF-1 A | Pump Valve | Valve | 10 | Suc. Valve | 79.8 | 0.00144 |
| 45 | 29-08-2023 | 70-PA-CF-1 B | Pump Valve | Valve | 10 | Suc. Valve | 63.4 | 0.00121 |
| 46 | 29-08-2023 | 70-PA-CF-1 C | Pump Valve | Valve | 10 | Suc. Valve | 80.6 | 0.00145 |
| 47 | 29-08-2023 | 70-PA-CF-5 A | Pump Valve | Valve | 10 | Suc. Valve | 93.4 | 0.00162 |
| 48 | 29-08-2023 | 70-PA-CF-5 B | Pump Valve | Valve | 10 | Suc. Valve | 25.1 | 0.00061 |
| 49 | 29-08-2023 | 70-PA-CF-5 C | Pump Valve | Valve | 10 | Suc. Valve | 133.2 | 0.00211 |
| 50 | 29-08-2023 | 70-PA-CF-14 A | Pump Valve | Valve | 8 | Suc. Valve | 613.2 | 0.00660 |
| 51 | 29-08-2023 | 70-PA-CF-14 B | Pump Valve | Valve | 8 | Suc. Valve | 20.4 | 0.00052 |

# BHARAT PETROLEUM CORPORATION LIMITED, BINA-M.P.
## LDAR QUARTERLY REPORT FOR JULY 2023 TO SEPTEMBER 2023
### Monitoring - VOC Plant – BDT

| S.No. | Date | Tag. No. | Equipment | Component | Line size (inch) | Location | Screening Value sv (ppm) | Estimated Emission Rate kg/day |
|---|---|---|---|---|---|---|---|---|
| COMPONENT - VALVE | | | | | | | | |
| 52 | 29-08-2023 | 70-PA-CF-15 A | Pump Valve | Valve | 4 | Dis. Valve | 76.9 | 0.00140 |
| 53 | 29-08-2023 | 70-PA-CF-15 B | Pump Valve | Valve | 4 | Dis. Valve | 80.1 | 0.00145 |
| 54 | 29-08-2023 | 70-PA-CF-15 C | Pump Valve | Valve | 4 | Dis. Valve | 43.6 | 0.00092 |
| 55 | 29-08-2023 | 70-PA-CF-13 D | Pump Valve | Valve | 8 | Dis. Valve | 25.4 | 0.00061 |
| 56 | 29-08-2023 | 70-PA-CF-13 C | Pump Valve | Valve | 8 | Dis. Valve | 92.8 | 0.00161 |
| 57 | 29-08-2023 | 70-PA-CF-13 B | Pump Valve | Valve | 8 | Dis. Valve | 143.6 | 0.00224 |
| 58 | 29-08-2023 | 70-PA-CF-13 A | Pump Valve | Valve | 8 | Dis. Valve | 23.6 | 0.00058 |
| 59 | 29-08-2023 | 70-PA-CF-9 C | Pump Valve | Valve | 8 | Dis. Valve | 90.1 | 0.00158 |
| 60 | 29-08-2023 | 70-PA-CF-9 B | Pump Valve | Valve | 8 | Dis. Valve | 189.4 | 0.00275 |
| 61 | 29-08-2023 | 70-PA-CF-9 A | Pump Valve | Valve | 8 | Dis. Valve | 30.6 | 0.00071 |
| 62 | 29-08-2023 | 70-PA-CF-3 B | Pump Valve | Valve | 8 | Dis. Valve | 52.1 | 0.00105 |
| 63 | 29-08-2023 | 70-PA-CF-3 A | Pump Valve | Valve | 8 | Dis. Valve | 163.5 | 0.00246 |
| 64 | 29-08-2023 | 70-PA-CF-11 C | Pump Valve | Valve | 8 | Dis. Valve | 20.4 | 0.00052 |
| 65 | 29-08-2023 | 70-PA-CF-11 B | Pump Valve | Valve | 8 | Dis. Valve | 63.9 | 0.00122 |
| 66 | 29-08-2023 | 70-PA-CF-11 A | Pump Valve | Valve | 8 | Dis. Valve | 80.1 | 0.00145 |
| 67 | 29-08-2023 | 70-PA-CF-10 A | Pump Valve | Valve | 8 | Dis. Valve | 46.3 | 0.00096 |
| 68 | 29-08-2023 | 70-PA-CF-10 B | Pump Valve | Valve | 8 | Dis. Valve | 26.9 | 0.00064 |
| 69 | 29-08-2023 | 70-PA-CF-10 C | Pump Valve | Valve | 8 | Dis. Valve | 80.4 | 0.00145 |
| 70 | 29-08-2023 | 70-PA-CF-4 A | Pump Valve | Valve | 8 | Dis. Valve | 73.1 | 0.00135 |
| 71 | 29-08-2023 | 70-PA-CF-4 B | Pump Valve | Valve | 8 | Dis. Valve | 256.4 | 0.00344 |
| 72 | 29-08-2023 | 70-PA-CF-4 C | Pump Valve | Valve | 8 | Dis. Valve | 23.1 | 0.00057 |
| 73 | 29-08-2023 | 70-PA-CF-4 D | Pump Valve | Valve | 8 | Dis. Valve | 63.2 | 0.00121 |
| 74 | 29-08-2023 | 70-PA-CF-4 E | Pump Valve | Valve | 8 | Dis. Valve | 30.9 | 0.00071 |
| 75 | 29-08-2023 | 70-PA-CF-12 A | Pump Valve | Valve | 8 | Dis. Valve | 86.4 | 0.00153 |
| 76 | 29-08-2023 | 70-PA-CF-12 B | Pump Valve | Valve | 8 | Dis. Valve | 123.6 | 0.00200 |
| 77 | 29-08-2023 | 70-PA-CF-12 C | Pump Valve | Valve | 8 | Dis. Valve | 53.4 | 0.00107 |
| 78 | 29-08-2023 | 70-PA-CF-12 D | Pump Valve | Valve | 8 | Dis. Valve | 80.1 | 0.00145 |
| 79 | 29-08-2023 | 70-PA-CF-12 E | Pump Valve | Valve | 8 | Dis. Valve | 26.4 | 0.00063 |
| 80 | 29-08-2023 | 70-PA-CF-8 C | Pump Valve | Valve | 8 | Dis. Valve | 36.2 | 0.00080 |
| 81 | 29-08-2023 | 70-PA-CF-8 B | Pump Valve | Valve | 8 | Dis. Valve | 136.4 | 0.00215 |
| 82 | 29-08-2023 | 70-PA-CF-8 A | Pump Valve | Valve | 8 | Dis. Valve | 80.6 | 0.00145 |
| 83 | 29-08-2023 | 70-PA-CF-2 E | Pump Valve | Valve | 8 | Dis. Valve | 53.4 | 0.00107 |
| 84 | 29-08-2023 | 70-PA-CF-2 D | Pump Valve | Valve | 8 | Dis. Valve | 20.9 | 0.00053 |
| 85 | 29-08-2023 | 70-PA-CF-2 C | Pump Valve | Valve | 8 | Dis. Valve | 20.6 | 0.00053 |
| 86 | 29-08-2023 | 70-PA-CF-2 B | Pump Valve | Valve | 8 | Dis. Valve | 35.4 | 0.00079 |
| 87 | 29-08-2023 | 70-PA-CF-2 A | Pump Valve | Valve | 8 | Dis. Valve | 123.6 | 0.00200 |
| 88 | 29-08-2023 | 70-PA-CF-6 E | Pump Valve | Valve | 8 | Dis. Valve | 93.4 | 0.00162 |
| 89 | 29-08-2023 | 70-PA-CF-6 D | Pump Valve | Valve | 8 | Dis. Valve | 21.5 | 0.00054 |
| 90 | 29-08-2023 | 70-PA-CF-6 C | Pump Valve | Valve | 8 | Dis. Valve | 46.3 | 0.00096 |
| 91 | 29-08-2023 | 70-PA-CF-6 B | Pump Valve | Valve | 8 | Dis. Valve | 93.1 | 0.00162 |
| 92 | 29-08-2023 | 70-PA-CF-6 A | Pump Valve | Valve | 8 | Dis. Valve | 20.6 | 0.00053 |
| 93 | 29-08-2023 | 70-PA-CF-7 A | Pump Valve | Valve | 8 | Dis. Valve | 53.4 | 0.00107 |
| 94 | 29-08-2023 | 70-PA-CF-7 B | Pump Valve | Valve | 8 | Dis. Valve | 80.4 | 0.00145 |
| 95 | 29-08-2023 | 70-PA-CF-1 A | Pump Valve | Valve | 8 | Dis. Valve | 13.6 | 0.00039 |
| 96 | 29-08-2023 | 70-PA-CF-1 B | Pump Valve | Valve | 8 | Dis. Valve | 43.2 | 0.00091 |
| 97 | 29-08-2023 | 70-PA-CF-1 C | Pump Valve | Valve | 8 | Dis. Valve | 16.8 | 0.00045 |
| 98 | 29-08-2023 | 70-PA-CF-5 A | Pump Valve | Valve | 8 | Dis. Valve | 93.4 | 0.00162 |
| 99 | 29-08-2023 | 70-PA-CF-5 B | Pump Valve | Valve | 8 | Dis. Valve | 123.8 | 0.00200 |
| 100 | 29-08-2023 | 70-PA-CF-5 C | Pump Valve | Valve | 8 | Dis. Valve | 91.4 | 0.00160 |
| 101 | 29-08-2023 | 70-PA-CF-14 A | Pump Valve | Valve | 6 | Dis. Valve | 23.6 | 0.00058 |
| 102 | 29-08-2023 | 70-PA-CF-14 B | Pump Valve | Valve | 6 | Dis. Valve | 70.1 | 0.00131 |

# BHARAT PETROLEUM CORPORATION LIMITED, BINA-M.P.
## LDAR QUARTERLY REPORT FOR JULY 2023 TO SEPTEMBER 2023
### Monitoring - VOC Plant – BDT

| S.No. | Date | Tag. No. | Equipment | Component | Line size (inch) | Location | Screening Value sv (ppm) | Estimated Emission Rate kg/day |
|---|---|---|---|---|---|---|---|---|
| COMPONENT - VALVE | | | | | | | | |
| 103 | 29-08-2023 | 70-FV-1901 | Pump Valve | Valve | 4 | Control Valve | 23.6 | 0.00058 |
| 104 | 29-08-2023 | 70-FV-1902 | Pump Valve | Valve | 2 | Control Valve | 93.1 | 0.00162 |
| 105 | 29-08-2023 | 70-ROV-1903 | Pump Valve | Valve | 6 | Control Valve | 423.6 | 0.00501 |
| 106 | 29-08-2023 | 70-ROV-1901 | Pump Valve | Valve | 6 | Control Valve | 63.5 | 0.00122 |
| 107 | 29-08-2023 | 70-ROV-1902 | Pump Valve | Valve | 6 | Control Valve | 2.3 | 0.00010 |
| 108 | 29-08-2023 | 70-ROV-1906 | Pump Valve | Valve | 6 | Control Valve | 13.2 | 0.00038 |
| 109 | 29-08-2023 | 70-ROV-1904 | Pump Valve | Valve | 6 | Control Valve | 60.1 | 0.00117 |
| 110 | 29-08-2023 | 70-ROV-1905 | Pump Valve | Valve | 6 | Control Valve | 43.2 | 0.00091 |
| 111 | 29-08-2023 | 70-ROV-1909 | Pump Valve | Valve | 6 | Control Valve | 50.9 | 0.00103 |
| 112 | 29-08-2023 | 70-ROV-1907 | Pump Valve | Valve | 6 | Control Valve | 86.4 | 0.00153 |
| 113 | 29-08-2023 | 70-ROV-1908 | Control Valve | Valve | 6 | Control Valve | 146.2 | 0.00227 |
| 114 | 29-08-2023 | 70-ROV-1912 | Control Valve | Valve | 6 | Control Valve | 30.9 | 0.00071 |
| 115 | 29-08-2023 | 70-ROV-1910 | Control Valve | Valve | 6 | Control Valve | 63.8 | 0.00122 |
| 116 | 29-08-2023 | 70-ROV-1911 | Control Valve | Valve | 6 | Control Valve | 70.1 | 0.00131 |
| 117 | 29-08-2023 | 70-ROV-1915 | Control Valve | Valve | 6 | Control Valve | 43.9 | 0.00092 |
| 118 | 29-08-2023 | 70-ROV-1913 | Control Valve | Valve | 6 | Control Valve | 64.1 | 0.00122 |
| 119 | 29-08-2023 | 70-ROV-1914 | Control Valve | Valve | 6 | Control Valve | 23.7 | 0.00058 |
| 120 | 29-08-2023 | 70-ROV-1918 | Control Valve | Valve | 6 | Control Valve | 80.4 | 0.00145 |
| 121 | 29-08-2023 | 70-ROV-1916 | Control Valve | Valve | 6 | Control Valve | 26.5 | 0.00063 |
| 122 | 29-08-2023 | 70-ROV-1917 | Control Valve | Valve | 6 | Control Valve | 31.2 | 0.00072 |
| 123 | 29-08-2023 | 70-MOV-1721 | Control Valve | Valve | 10 | Control Valve | 30.6 | 0.00071 |
| 124 | 29-08-2023 | 70-FV-1701 | Control Valve | Valve | 6 | Control Valve | 93.1 | 0.00162 |
| 125 | 29-08-2023 | 70-MOV-1811 | Control Valve | Valve | 10 | Control Valve | 20.4 | 0.00052 |
| 126 | 29-08-2023 | 70-MOV-1531 | Control Valve | Valve | 10 | Control Valve | 56.2 | 0.00111 |
| 127 | 29-08-2023 | 70-FV-1801 | Control Valve | Valve | 4 | Control Valve | 36.9 | 0.00081 |
| 128 | 29-08-2023 | 70-FV-1501 | Control Valve | Valve | 6 | Control Valve | 80.4 | 0.00145 |
| 129 | 29-08-2023 | 70-MOV-1337 | Control Valve | Valve | 10 | Control Valve | 174.4 | 0.00258 |
| 130 | 29-08-2023 | 70-FV-1301 | Control Valve | Valve | 6 | Control Valve | 23.6 | 0.00058 |
| 131 | 29-08-2023 | 70-MOV-1238 | Control Valve | Valve | 10 | Control Valve | 93.1 | 0.00162 |
| 132 | 29-08-2023 | 70-MOV-1137 | Control Valve | Valve | 10 | Control Valve | 20.3 | 0.00052 |
| 133 | 29-08-2023 | 70-FV-1201 | Control Valve | Valve | 4 | Control Valve | 62.1 | 0.00120 |
| 134 | 29-08-2023 | 70-FV-1101 | Control Valve | Valve | 6 | Control Valve | 23.6 | 0.00058 |
| 135 | 29-08-2023 | 70-MOV-1637 | Control Valve | Valve | 6 | Control Valve | 96.5 | 0.00166 |
| 136 | 29-08-2023 | 70-FV-1601 | Control Valve | Valve | 4 | Control Valve | 130.2 | 0.00208 |
| 137 | 29-08-2023 | 70-MOV-1436 | Control Valve | Valve | 10 | Control Valve | 46.8 | 0.00097 |
| 138 | 29-08-2023 | 70-FV-1401 | Control Valve | Valve | 4 | Control Valve | 74.1 | 0.00136 |
| 139 | 29-08-2023 | 70-FV-1502 | Control Valve | Valve | 8 | Control Valve | 63.2 | 0.00121 |
| 140 | 29-08-2023 | 70-MOV-1532 | Control Valve | Valve | 10 | Control Valve | 10.3 | 0.00031 |
| 141 | 29-08-2023 | 70-FV-1302 | Control Valve | Valve | 8 | Control Valve | 93.6 | 0.00162 |
| 142 | 29-08-2023 | 70-MOV-1338 | Control Valve | Valve | 10 | Control Valve | 80.4 | 0.00145 |
| 143 | 29-08-2023 | 70-FV-1202 | Control Valve | Valve | 8 | Control Valve | 23.6 | 0.00058 |
| 144 | 29-08-2023 | 70-MOV-1239 | Control Valve | Valve | 10 | Control Valve | 50.1 | 0.00102 |
| 145 | 29-08-2023 | 70-FV-1102 | Control Valve | Valve | 8 | Control Valve | 156.4 | 0.00238 |
| 146 | 29-08-2023 | 70-MOV-1138 | Control Valve | Valve | 10 | Control Valve | 23.8 | 0.00058 |
| 147 | 29-08-2023 | 70-FV-1402 | Control Valve | Valve | 8 | Control Valve | 93.4 | 0.00162 |
| 148 | 29-08-2023 | 70-FV-1602 | Control Valve | Valve | 8 | Control Valve | 123.9 | 0.00200 |
| 149 | 29-08-2023 | 70-MOV-1437 | Control Valve | Valve | 10 | Control Valve | 879.6 | 0.00864 |
| 150 | 29-08-2023 | 70-MOV-1638 | Control Valve | Valve | 10 | Control Valve | 345.5 | 0.00430 |

# BHARAT PETROLEUM CORPORATION LIMITED, BINA-M.P.
## LDAR QUARTERLY REPORT FOR JULY 2023 TO SEPTEMBER 2023
### Monitoring - VOC Plant – BDT

| S.No. | Date | Tag. No. | Equipment | Component | Line size (inch) | Location | Screening Value sv (ppm) | Estimated Emission Rate kg/day |
|---|---|---|---|---|---|---|---|---|
| COMPONENT - VALVE | | | | | | | | |
| 151 | 29-08-2023 | 70-FV-1901 | Control Valve | Valve | 2 | Bypass Valve | 60.1 | 0.00117 |
| 152 | 29-08-2023 | 70-FV-1902 | Control Valve | Valve | 2 | Bypass Valve | 23.5 | 0.00058 |
| 153 | 29-08-2023 | 70-ROV-1903 | Control Valve | Valve | 4 | Bypass Valve | 62.4 | 0.00120 |
| 154 | 29-08-2023 | 70-ROV-1901 | Control Valve | Valve | 4 | Bypass Valve | 189.6 | 0.00275 |
| 155 | 29-08-2023 | 70-ROV-1902 | Control Valve | Valve | 4 | Bypass Valve | 63.5 | 0.00122 |
| 156 | 29-08-2023 | 70-ROV-1906 | Control Valve | Valve | 4 | Bypass Valve | 3.1 | 0.00013 |
| 157 | 29-08-2023 | 70-ROV-1904 | Control Valve | Valve | 4 | Bypass Valve | 20.6 | 0.00053 |
| 158 | 29-08-2023 | 70-ROV-1905 | Control Valve | Valve | 4 | Bypass Valve | 53.2 | 0.00107 |
| 159 | 29-08-2023 | 70-ROV-1909 | Control Valve | Valve | 4 | Bypass Valve | 143.3 | 0.00223 |
| 160 | 29-08-2023 | 70-ROV-1907 | Control Valve | Valve | 4 | Bypass Valve | 62.1 | 0.00120 |
| 161 | 29-08-2023 | 70-ROV-1908 | Control Valve | Valve | 4 | Bypass Valve | 62.1 | 0.00120 |
| 162 | 29-08-2023 | 70-ROV-1912 | Control Valve | Valve | 4 | Bypass Valve | 30.8 | 0.00071 |
| 163 | 29-08-2023 | 70-ROV-1910 | Control Valve | Valve | 4 | Bypass Valve | 76.4 | 0.00140 |
| 164 | 29-08-2023 | 70-ROV-1911 | Control Valve | Valve | 4 | Bypass Valve | 13.4 | 0.00038 |
| 165 | 29-08-2023 | 70-ROV-1915 | Control Valve | Valve | 4 | Bypass Valve | 56.2 | 0.00111 |
| 166 | 29-08-2023 | 70-ROV-1913 | Control Valve | Valve | 4 | Bypass Valve | 9.7 | 0.00030 |
| 167 | 29-08-2023 | 70-ROV-1914 | Control Valve | Valve | 4 | Bypass Valve | 63.8 | 0.00122 |
| 168 | 29-08-2023 | 70-ROV-1918 | Control Valve | Valve | 4 | Bypass Valve | 54.1 | 0.00108 |
| 169 | 29-08-2023 | 70-ROV-1916 | Control Valve | Valve | 4 | Bypass Valve | 23.6 | 0.00058 |
| 170 | 29-08-2023 | 70-ROV-1917 | Control Valve | Valve | 4 | Bypass Valve | 16.4 | 0.00044 |
| 171 | 29-08-2023 | 70-MOV-1721 | Control Valve | Valve | 8 | Bypass Valve | 23.4 | 0.00058 |
| 172 | 29-08-2023 | 70-FV-1701 | Control Valve | Valve | 4 | Bypass Valve | 79.6 | 0.00144 |
| 173 | 29-08-2023 | 70-MOV-1811 | Control Valve | Valve | 8 | Bypass Valve | 36.5 | 0.00080 |
| 174 | 29-08-2023 | 70-MOV-1531 | Control Valve | Valve | 8 | Bypass Valve | 21.1 | 0.00053 |
| 175 | 29-08-2023 | 70-FV-1801 | Control Valve | Valve | 2 | Bypass Valve | 20.7 | 0.00053 |
| 176 | 29-08-2023 | 70-FV-1501 | Control Valve | Valve | 4 | Bypass Valve | 89.4 | 0.00157 |
| 177 | 29-08-2023 | 70-MOV-1337 | Control Valve | Valve | 8 | Bypass Valve | 23.6 | 0.00058 |
| 178 | 29-08-2023 | 70-FV-1301 | Control Valve | Valve | 6 | Bypass Valve | 612.3 | 0.00659 |
| 179 | 29-08-2023 | 70-MOV-1238 | Control Valve | Valve | 8 | Bypass Valve | 20.7 | 0.00053 |
| 180 | 29-08-2023 | 70-MOV-1137 | Control Valve | Valve | 8 | Bypass Valve | 89.4 | 0.00157 |
| 181 | 29-08-2023 | 70-FV-1201 | Control Valve | Valve | 2 | Bypass Valve | 6.5 | 0.00022 |
| 182 | 29-08-2023 | 70-FV-1101 | Control Valve | Valve | 4 | Bypass Valve | 3.7 | 0.00015 |
| 183 | 29-08-2023 | 70-MOV-1637 | Control Valve | Valve | 4 | Bypass Valve | 8.1 | 0.00026 |
| 184 | 29-08-2023 | 70-FV-1601 | Control Valve | Valve | 2 | Bypass Valve | 26.4 | 0.00063 |
| 185 | 29-08-2023 | 70-MOV-1436 | Control Valve | Valve | 8 | Bypass Valve | 2.8 | 0.00012 |
| 186 | 29-08-2023 | 70-FV-1401 | Control Valve | Valve | 2 | Bypass Valve | 93.6 | 0.00162 |
| 187 | 29-08-2023 | 70-FV-1502 | Control Valve | Valve | 6 | Bypass Valve | 2.4 | 0.00011 |
| 188 | 29-08-2023 | 70-MOV-1532 | Control Valve | Valve | 8 | Bypass Valve | 31.6 | 0.00072 |
| 189 | 29-08-2023 | 70-FV-1302 | Control Valve | Valve | 6 | Bypass Valve | 43.1 | 0.00091 |
| 190 | 29-08-2023 | 70-MOV-1338 | Control Valve | Valve | 8 | Bypass Valve | 20.3 | 0.00052 |
| 191 | 29-08-2023 | 70-FV-1202 | Control Valve | Valve | 6 | Bypass Valve | 6.9 | 0.00023 |
| 192 | 29-08-2023 | 70-MOV-1239 | Control Valve | Valve | 8 | Bypass Valve | 2.6 | 0.00011 |
| 193 | 29-08-2023 | 70-FV-1102 | Control Valve | Valve | 6 | Bypass Valve | 13.2 | 0.00038 |
| 194 | 29-08-2023 | 70-MOV-1138 | Control Valve | Valve | 8 | Bypass Valve | 70.4 | 0.00131 |
| 195 | 29-08-2023 | 70-FV-1402 | Control Valve | Valve | 6 | Bypass Valve | 15.6 | 0.00043 |
| 196 | 29-08-2023 | 70-FV-1602 | Control Valve | Valve | 6 | Bypass Valve | 93.2 | 0.00162 |
| 197 | 29-08-2023 | 70-MOV-1437 | Control Valve | Valve | 8 | Bypass Valve | 60.1 | 0.00117 |
| 198 | 29-08-2023 | 70-MOV-1638 | Control Valve | Valve | 8 | Bypass Valve | 23.8 | 0.00058 |
| | | | | | | | **Total VOC Emission from Valves** | **0.26085** |

# BHARAT PETROLEUM CORPORATION LIMITED, BINA-M.P.
## LDAR QUARTERLY REPORT FOR JULY 2023 TO SEPTEMBER 2023
### Monitoring - VOC Plant – BDT

| S.No. | Date | Tag. No. | Equipment | Component | Line size (inch) | Location | Screening Value sv (ppm) | Estimated Emission Rate kg/day |
|---|---|---|---|---|---|---|---|---|
| **COMPONENT - COMPRESSOR** | | | | | | | | |
| 1 | 29-08-2023 | 70-KA-RP-1556 | Compessor | Pump Seals | - | Compessor | 23.6 | 0.00830 |
| **Total VOC Emission from Compressor** | | | | | | | | **0.00830** |
| **COMPONENT - PSV** | | | | | | | | |
| 1 | 29-08-2023 | 70-PSV-2401 | PSV | Flange | 12 | Inlet | 530.6 | 0.00911 |
| | 29-08-2023 | 70-PSV-2401 | PSV | Flange | 12 | Outlet | 20.3 | 0.00092 |
| 2 | 29-08-2023 | 70-PSV-2402 | PSV | Flange | 12 | Inlet | 16.5 | 0.00079 |
| | 29-08-2023 | 70-PSV-2402 | PSV | Flange | 12 | Outlet | 40.2 | 0.00148 |
| 3 | 29-08-2023 | 70-PSV-1901 A | PSV | Flange | 12 | Inlet | 36.5 | 0.00139 |
| | 29-08-2023 | 70-PSV-1901 A | PSV | Flange | 12 | Outlet | 122.3 | 0.00325 |
| 4 | 29-08-2023 | 70-PSV-1901 B | PSV | Flange | 12 | Inlet | 93.4 | 0.00269 |
| | 29-08-2023 | 70-PSV-1901 B | PSV | Flange | 12 | Outlet | 70.2 | 0.00220 |
| 5 | 29-08-2023 | 70-PSV-1902 A | PSV | Flange | 12 | Inlet | 16.5 | 0.00079 |
| | 29-08-2023 | 70-PSV-1902 A | PSV | Flange | 12 | Outlet | 32.1 | 0.00127 |
| 6 | 29-08-2023 | 70-PSV-1902 B | PSV | Flange | 12 | Inlet | 6.3 | 0.00040 |
| | 29-08-2023 | 70-PSV-1902 B | PSV | Flange | 12 | Outlet | 53.1 | 0.00181 |
| 7 | 29-08-2023 | 70-PSV-1903 B | PSV | Flange | 12 | Inlet | 20.3 | 0.00092 |
| | 29-08-2023 | 70-PSV-1903 B | PSV | Flange | 12 | Outlet | 143.6 | 0.00363 |
| 8 | 29-08-2023 | 70-PSV-1903 A | PSV | Flange | 12 | Inlet | 93.7 | 0.00269 |
| | 29-08-2023 | 70-PSV-1903 A | PSV | Flange | 12 | Outlet | 80.1 | 0.00241 |
| 9 | 29-08-2023 | 70-PSV-1904 B | PSV | Flange | 12 | Inlet | 23.4 | 0.00102 |
| | 29-08-2023 | 70-PSV-1904 B | PSV | Flange | 12 | Outlet | 6.6 | 0.00042 |
| 10 | 29-08-2023 | 70-PSV-1904 A | PSV | Flange | 12 | Inlet | 32.1 | 0.00127 |
| | 29-08-2023 | 70-PSV-1904 A | PSV | Flange | 12 | Outlet | 89.7 | 0.00261 |
| 11 | 29-08-2023 | 70-PSV-1905 A | PSV | Flange | 12 | Inlet | 20.6 | 0.00093 |
| | 29-08-2023 | 70-PSV-1905 A | PSV | Flange | 12 | Outlet | 31.4 | 0.00125 |
| 12 | 29-08-2023 | 70-PSV-1905 B | PSV | Flange | 12 | Inlet | 26.3 | 0.00110 |
| | 29-08-2023 | 70-PSV-1905 B | PSV | Flange | 12 | Outlet | 93.1 | 0.00268 |
| 13 | 29-08-2023 | 70-PSV-1906 A | PSV | Flange | 12 | Inlet | 413.2 | 0.00764 |
| | 29-08-2023 | 70-PSV-1906 A | PSV | Flange | 12 | Outlet | 62.1 | 0.00202 |
| 14 | 29-08-2023 | 70-PSV-1906 B | PSV | Flange | 12 | Inlet | 30.6 | 0.00123 |
| | 29-08-2023 | 70-PSV-1906 B | PSV | Flange | 12 | Outlet | 58.4 | 0.00193 |
| 15 | 29-08-2023 | 70-TSV-1907 | PSV | Flange | 1 | Inlet | 20.6 | 0.00093 |
| | 29-08-2023 | 70-TSV-1907 | PSV | Flange | 1 | Outlet | 63.1 | 0.00204 |
| 16 | 29-08-2023 | 70-TSV-1908 | PSV | Flange | 1 | Inlet | 89.9 | 0.00261 |
| | 29-08-2023 | 70-TSV-1908 | PSV | Flange | 1 | Outlet | 60.1 | 0.00197 |
| 17 | 29-08-2023 | 70-TSV-2405 | PSV | Flange | 1 | Inlet | 42.9 | 0.00155 |
| | 29-08-2023 | 70-TSV-2405 | PSV | Flange | 1 | Outlet | 86.1 | 0.00254 |
| 18 | 29-08-2023 | 70-TSV-1909 | PSV | Flange | 1 | Inlet | 23.6 | 0.00102 |
| | 29-08-2023 | 70-TSV-1909 | PSV | Flange | 1 | Outlet | 23.6 | 0.00102 |
| 19 | 29-08-2023 | 70-TSV-1910 | PSV | Flange | 1 | Inlet | 13.5 | 0.00069 |
| | 29-08-2023 | 70-TSV-1910 | PSV | Flange | 1 | Outlet | 62.9 | 0.00203 |
| 20 | 29-08-2023 | 70-PSV-2610 | PSV | Flange | 1 | Inlet | 86.4 | 0.00254 |
| | 29-08-2023 | 70-PSV-2610 | PSV | Flange | 1 | Outlet | 23.8 | 0.00103 |
| 21 | 29-08-2023 | 70-PSV-2609 | PSV | Flange | 1 | Inlet | 63.8 | 0.00205 |
| | 29-08-2023 | 70-PSV-2609 | PSV | Flange | 1 | Outlet | 90.2 | 0.00262 |
| **Total VOC Emission from PSV** | | | | | | | | **0.08448** |

# BHARAT PETROLEUM CORPORATION LIMITED, BINA-M.P.
## LDAR QUARTERLY REPORT FOR JULY 2023 TO SEPTEMBER 2023
### Monitoring - VOC Plant – BDT

| S.No. | Date | Tag. No. | Equipment | Component | Line size (inch) | Location | Screening Value sv (ppm) | Estimated Emission Rate kg/day |
|---|---|---|---|---|---|---|---|---|
| **COMPONENT - PRV** | | | | | | | | |
| 1 | 29-08-2023 | PVRV 1 (ETP TANK-2) | PRV | Flange | - | Flange | 65.2 | 0.00209 |
| 2 | 29-08-2023 | PVRV 2 (ETP TANK-2) | PRV | Flange | - | Flange | 33.6 | 0.00131 |
| 3 | 29-08-2023 | PVRV 3 (ETP TANK-2) | PRV | Flange | - | Flange | 124.5 | 0.00329 |
| 4 | 29-08-2023 | PVRV 1 (ETP TANK-1) | PRV | Flange | - | Flange | 62.5 | 0.00202 |
| 5 | 29-08-2023 | PVRV 2 (ETP TANK-1) | PRV | Flange | - | Flange | 2.6 | 0.00022 |
| 6 | 29-08-2023 | PVRV 3 (ETP TANK-1) | PRV | Flange | - | Flange | 80.5 | 0.00242 |
| **Total VOC Emission from PRV** | | | | | | | | **0.01135** |

**Total VOC Emission from BDT in Quarter July 2023 to September 2023 is 0.36498 kg/day**

# BHARAT PETROLEUM CORPORATION LIMITED, BINA-M.P.
## LDAR QUARTERLY REPORT FOR JULY 2023 TO SEPTEMBER 2023
### Monitoring - VOC Plant – HCU / DHDT

| S.No. | Date | Tag. No. | Equipment | Component | Line size (inch) | Location | Screening Value sv (ppm) | Estimated Emission Rate kg/day |
|---|---|---|---|---|---|---|---|---|
| COMPONENT - VALVE | | | | | | | | |
| 1 | 24-08-2023 | 16-PA-CF-605 B | Pump Valve | Valve | 6 | Suc. Valve | 61.2 | 0.00118 |
| 2 | 24-08-2023 | 16-PA-CF-605 A | Pump Valve | Valve | 6 | Suc. Valve | 36.2 | 0.00080 |
| 3 | 24-08-2023 | 16-PA-CF-606 B | Pump Valve | Valve | 6 | Suc. Valve | 146.5 | 0.00227 |
| 4 | 24-08-2023 | 16-PA-CF-606 A | Pump Valve | Valve | 6 | Suc. Valve | 23.2 | 0.00057 |
| 5 | 24-08-2023 | 16-PA-CF-603 B | Pump Valve | Valve | 6 | Suc. Valve | 6.1 | 0.00021 |
| 6 | 24-08-2023 | 16-PA-CF-603 A | Pump Valve | Valve | 6 | Suc. Valve | 30.5 | 0.00070 |
| 7 | 24-08-2023 | 16-PA-CF-1602 B | Pump Valve | Valve | 4 | Suc. Valve | 62.4 | 0.00120 |
| 8 | 24-08-2023 | 16-PA-CF-1602 A | Pump Valve | Valve | 4 | Suc. Valve | 4.3 | 0.00016 |
| 9 | 24-08-2023 | 16-PA-CF-601 A | Pump Valve | Valve | 4 | Suc. Valve | 26.5 | 0.00063 |
| 10 | 24-08-2023 | 16-PA-CF-601 B | Pump Valve | Valve | 4 | Suc. Valve | 1.5 | 0.00007 |
| 11 | 24-08-2023 | 16-PA-CF-608 A | Pump Valve | Valve | 4 | Suc. Valve | 6.4 | 0.00022 |
| 12 | 24-08-2023 | 16-PA-CF-608 B | Pump Valve | Valve | 4 | Suc. Valve | 56.2 | 0.00111 |
| 13 | 24-08-2023 | 16-PA-CF-602 A | Pump Valve | Valve | 8 | Suc. Valve | 39.8 | 0.00086 |
| 14 | 24-08-2023 | 16-PA-CF-602 B | Pump Valve | Valve | 8 | Suc. Valve | 70.4 | 0.00131 |
| 15 | 24-08-2023 | 16-PA-CF-810 A | Pump Valve | Valve | 4 | Suc. Valve | 51.8 | 0.00104 |
| 16 | 24-08-2023 | 16-PA-CF-810 B | Pump Valve | Valve | 4 | Suc. Valve | 99.5 | 0.00170 |
| 17 | 24-08-2023 | 16-PA-CF-701 A | Pump Valve | Valve | 3 | Suc. Valve | 156.5 | 0.00238 |
| 18 | 24-08-2023 | 16-PA-CF-701 B | Pump Valve | Valve | 3 | Suc. Valve | 346.5 | 0.00431 |
| 19 | 24-08-2023 | 16-PA-CF-501 A | Pump Valve | Valve | 6 | Suc. Valve | 20.1 | 0.00052 |
| 20 | 24-08-2023 | 16-PA-CF-501 B | Pump Valve | Valve | 6 | Suc. Valve | 5.5 | 0.00020 |
| 21 | 24-08-2023 | 16-PA-CF-505 A | Pump Valve | Valve | 8 | Suc. Valve | 62.4 | 0.00120 |
| 22 | 24-08-2023 | 16-PA-CF-505 B | Pump Valve | Valve | 8 | Suc. Valve | 93.4 | 0.00162 |
| 23 | 24-08-2023 | 16-PA-CF-508 A | Pump Valve | Valve | 6 | Suc. Valve | 2.1 | 0.00010 |
| 24 | 24-08-2023 | 16-PA-CF-508 B | Pump Valve | Valve | 6 | Suc. Valve | 36.3 | 0.00080 |
| 25 | 24-08-2023 | 16-PA-CF-507 A | Pump Valve | Valve | 12 | Suc. Valve | 80.5 | 0.00145 |
| 26 | 24-08-2023 | 16-PA-CF-507 B | Pump Valve | Valve | 12 | Suc. Valve | 2.2 | 0.00010 |
| 27 | 24-08-2023 | 16-PA-CF-705 A | Pump Valve | Valve | 12 | Suc. Valve | 6.4 | 0.00022 |
| 28 | 24-08-2023 | 16-PA-CF-705 B | Pump Valve | Valve | 12 | Suc. Valve | 73.1 | 0.00135 |
| 29 | 24-08-2023 | 16-PA-CF-502 A | Pump Valve | Valve | 8 | Suc. Valve | 26.5 | 0.00063 |
| 30 | 24-08-2023 | 16-PA-CF-502 B | Pump Valve | Valve | 8 | Suc. Valve | 3.4 | 0.00014 |
| 31 | 24-08-2023 | 16-PA-CF-506 A | Pump Valve | Valve | 6 | Suc. Valve | 26.5 | 0.00063 |
| 32 | 24-08-2023 | 16-PA-CF-506 B | Pump Valve | Valve | 6 | Suc. Valve | 13.5 | 0.00038 |
| 33 | 24-08-2023 | 16-PA-CF-504 A | Pump Valve | Valve | 4 | Suc. Valve | 62.5 | 0.00120 |
| 34 | 24-08-2023 | 16-PA-CF-504 B | Pump Valve | Valve | 4 | Suc. Valve | 144.5 | 0.00225 |
| 35 | 24-08-2023 | 16-PA-CF-503 A | Pump Valve | Valve | 3 | Suc. Valve | 26.6 | 0.00064 |
| 36 | 24-08-2023 | 16-PA-CF-503 B | Pump Valve | Valve | 3 | Suc. Valve | 80.6 | 0.00145 |
| 37 | 24-08-2023 | 16-PA-CF-703 B | Pump Valve | Valve | 2 | Suc. Valve | 53.4 | 0.00107 |
| 38 | 24-08-2023 | 16-PA-CF-703 A | Pump Valve | Valve | 2 | Suc. Valve | 26.5 | 0.00063 |
| 39 | 24-08-2023 | 16-PA-CF-702 B | Pump Valve | Valve | 4 | Suc. Valve | 133.2 | 0.00211 |
| 40 | 24-08-2023 | 16-PA-CF-702 A | Pump Valve | Valve | 4 | Suc. Valve | 62.4 | 0.00120 |
| 41 | 24-08-2023 | 16-PA-CF-704 B | Pump Valve | Valve | 2 | Suc. Valve | 80.4 | 0.00145 |
| 42 | 24-08-2023 | 16-PA-CF-704 A | Pump Valve | Valve | 2 | Suc. Valve | 6.7 | 0.00023 |
| 43 | 24-08-2023 | 16-PA-CF-812 A | Pump Valve | Valve | 6 | Suc. Valve | 89.4 | 0.00157 |
| 44 | 24-08-2023 | 16-PA-CF-812 B | Pump Valve | Valve | 6 | Suc. Valve | 13.5 | 0.00038 |
| 45 | 24-08-2023 | 16-PA-CF-201 A | Pump Valve | Valve | 6 | Suc. Valve | 62.5 | 0.00120 |
| 46 | 24-08-2023 | 16-PA-CF-201 B | Pump Valve | Valve | 6 | Suc. Valve | 9.8 | 0.00030 |
| 47 | 24-08-2023 | 16-PA-CF-101 | Pump Valve | Valve | 6 | Suc. Valve | 26.5 | 0.00063 |
| 48 | 24-08-2023 | 16-PA-CF-301 B | Pump Valve | Valve | 6 | Suc. Valve | 3.6 | 0.00014 |
| 49 | 24-08-2023 | 16-PA-CF-301 A | Pump Valve | Valve | 6 | Suc. Valve | 80.4 | 0.00145 |
| 50 | 24-08-2023 | 16-PA-CF-402 A | Pump Valve | Valve | 4 | Suc. Valve | 156.5 | 0.00238 |
| 51 | 24-08-2023 | 16-PA-CF-402 B | Pump Valve | Valve | 4 | Suc. Valve | 3.8 | 0.00015 |
| 52 | 24-08-2023 | 16-PA-CF-102 A | Pump Valve | Valve | 8 | Suc. Valve | 97.4 | 0.00167 |

# BHARAT PETROLEUM CORPORATION LIMITED, BINA-M.P.
## LDAR QUARTERLY REPORT FOR JULY 2023 TO SEPTEMBER 2023
### Monitoring - VOC Plant – HCU / DHDT

| S.No. | Date | Tag. No. | Equipment | Component | Line size (inch) | Location | Screening Value sv (ppm) | Estimated Emission Rate kg/day |
|---|---|---|---|---|---|---|---|---|
| COMPONENT - VALVE | | | | | | | | |
| 53 | 24-08-2023 | 16-PA-CF-102 B | Pump Valve | Valve | 8 | Suc. Valve | 51.9 | 0.00105 |
| 54 | 24-08-2023 | 16-PA-CF-405 | Pump Valve | Valve | 6 | Suc. Valve | 86.6 | 0.00153 |
| 55 | 24-08-2023 | 16-PA-CF-612 A | Pump Valve | Valve | 1 | Suc. Valve | 612.2 | 0.00659 |
| 56 | 24-08-2023 | 16-PA-CF-605 B | Pump Valve | Valve | 6 | Dis. Valve | 35.5 | 0.00079 |
| 57 | 24-08-2023 | 16-PA-CF-605 A | Pump Valve | Valve | 6 | Dis. Valve | 80.4 | 0.00145 |
| 58 | 24-08-2023 | 16-PA-CF-606 B | Pump Valve | Valve | 4 | Dis. Valve | 23.6 | 0.00058 |
| 59 | 24-08-2023 | 16-PA-CF-606 A | Pump Valve | Valve | 4 | Dis. Valve | 80.4 | 0.00145 |
| 60 | 24-08-2023 | 16-PA-CF-603 B | Pump Valve | Valve | 6 | Dis. Valve | 26.4 | 0.00063 |
| 61 | 24-08-2023 | 16-PA-CF-603 A | Pump Valve | Valve | 6 | Dis. Valve | 13.7 | 0.00039 |
| 62 | 24-08-2023 | 16-PA-CF-1602 B | Pump Valve | Valve | 3 | Dis. Valve | 89.4 | 0.00157 |
| 63 | 24-08-2023 | 16-PA-CF-1602 A | Pump Valve | Valve | 3 | Dis. Valve | 62.1 | 0.00120 |
| 64 | 24-08-2023 | 16-PA-CF-601 A | Pump Valve | Valve | 3 | Dis. Valve | 23.1 | 0.00057 |
| 65 | 24-08-2023 | 16-PA-CF-601 B | Pump Valve | Valve | 3 | Dis. Valve | 23.8 | 0.00058 |
| 66 | 24-08-2023 | 16-PA-CF-608 A | Pump Valve | Valve | 3 | Dis. Valve | 96.9 | 0.00167 |
| 67 | 24-08-2023 | 16-PA-CF-608 B | Pump Valve | Valve | 3 | Dis. Valve | 80.1 | 0.00145 |
| 68 | 24-08-2023 | 16-PA-CF-602 A | Pump Valve | Valve | 6 | Dis. Valve | 23.7 | 0.00058 |
| 69 | 24-08-2023 | 16-PA-CF-602 B | Pump Valve | Valve | 6 | Dis. Valve | 41.6 | 0.00089 |
| 70 | 24-08-2023 | 16-PA-CF-810 A | Pump Valve | Valve | 3 | Dis. Valve | 23.9 | 0.00059 |
| 71 | 24-08-2023 | 16-PA-CF-810 B | Pump Valve | Valve | 3 | Dis. Valve | 86.2 | 0.00153 |
| 72 | 24-08-2023 | 16-PA-CF-701 A | Pump Valve | Valve | 2 | Dis. Valve | 46.2 | 0.00096 |
| 73 | 24-08-2023 | 16-PA-CF-701 B | Pump Valve | Valve | 2 | Dis. Valve | 13.7 | 0.00039 |
| 74 | 24-08-2023 | 16-PA-CF-501 A | Pump Valve | Valve | 4 | Dis. Valve | 84.4 | 0.00150 |
| 75 | 24-08-2023 | 16-PA-CF-501 B | Pump Valve | Valve | 4 | Dis. Valve | 94.5 | 0.00164 |
| 76 | 24-08-2023 | 16-PA-CF-505 A | Pump Valve | Valve | 6 | Dis. Valve | 7.1 | 0.00024 |
| 77 | 24-08-2023 | 16-PA-CF-505 B | Pump Valve | Valve | 6 | Dis. Valve | 2.3 | 0.00010 |
| 78 | 24-08-2023 | 16-PA-CF-508 A | Pump Valve | Valve | 4 | Dis. Valve | 6.4 | 0.00022 |
| 79 | 24-08-2023 | 16-PA-CF-508 B | Pump Valve | Valve | 4 | Dis. Valve | 52.1 | 0.00105 |
| 80 | 24-08-2023 | 16-PA-CF-507 A | Pump Valve | Valve | 10 | Dis. Valve | 136.6 | 0.00215 |
| 81 | 24-08-2023 | 16-PA-CF-507 B | Pump Valve | Valve | 10 | Dis. Valve | 6.1 | 0.00021 |
| 82 | 24-08-2023 | 16-PA-CF-705 A | Pump Valve | Valve | 10 | Dis. Valve | 20.2 | 0.00052 |
| 83 | 24-08-2023 | 16-PA-CF-705 B | Pump Valve | Valve | 10 | Dis. Valve | 93.6 | 0.00162 |
| 84 | 24-08-2023 | 16-PA-CF-502 A | Pump Valve | Valve | 6 | Dis. Valve | 6.4 | 0.00022 |
| 85 | 24-08-2023 | 16-PA-CF-502 B | Pump Valve | Valve | 6 | Dis. Valve | 52.2 | 0.00105 |
| 86 | 24-08-2023 | 16-PA-CF-506 A | Pump Valve | Valve | 4 | Dis. Valve | 3.5 | 0.00014 |
| 87 | 24-08-2023 | 16-PA-CF-506 B | Pump Valve | Valve | 4 | Dis. Valve | 4.6 | 0.00017 |
| 88 | 24-08-2023 | 16-PA-CF-504 A | Pump Valve | Valve | 3 | Dis. Valve | 80.4 | 0.00145 |
| 89 | 24-08-2023 | 16-PA-CF-504 B | Pump Valve | Valve | 3 | Dis. Valve | 13.5 | 0.00038 |
| 90 | 24-08-2023 | 16-PA-CF-503 A | Pump Valve | Valve | 2 | Dis. Valve | 26.9 | 0.00064 |
| 91 | 24-08-2023 | 16-PA-CF-503 B | Pump Valve | Valve | 2 | Dis. Valve | 9.1 | 0.00029 |
| 92 | 24-08-2023 | 16-PA-CF-703 B | Pump Valve | Valve | 1 | Dis. Valve | 23.4 | 0.00058 |
| 93 | 24-08-2023 | 16-PA-CF-703 A | Pump Valve | Valve | 1 | Dis. Valve | 80.6 | 0.00145 |
| 94 | 24-08-2023 | 16-PA-CF-702 B | Pump Valve | Valve | 4 | Dis. Valve | 39.2 | 0.00085 |
| 95 | 24-08-2023 | 16-PA-CF-702 A | Pump Valve | Valve | 4 | Dis. Valve | 1.6 | 0.00008 |
| 96 | 24-08-2023 | 16-PA-CF-704 B | Pump Valve | Valve | 1 | Dis. Valve | 56.6 | 0.00112 |
| 97 | 24-08-2023 | 16-PA-CF-704 A | Pump Valve | Valve | 1 | Dis. Valve | 3.4 | 0.00014 |
| 98 | 24-08-2023 | 16-PA-CF-812 A | Pump Valve | Valve | 6 | Dis. Valve | 12.8 | 0.00037 |
| 99 | 24-08-2023 | 16-PA-CF-812 B | Pump Valve | Valve | 6 | Dis. Valve | 93.4 | 0.00162 |
| 100 | 24-08-2023 | 16-PA-CF-201 A | Pump Valve | Valve | 8 | Dis. Valve | 26.1 | 0.00063 |
| 101 | 24-08-2023 | 16-PA-CF-201 B | Pump Valve | Valve | 8 | Dis. Valve | 30.2 | 0.00070 |
| 102 | 24-08-2023 | 16-PA-CF-101 | Pump Valve | Valve | 8 | Dis. Valve | 71.4 | 0.00133 |
| 103 | 24-08-2023 | 16-PA-CF-301 B | Pump Valve | Valve | 8 | Dis. Valve | 546.2 | 0.00605 |
| 104 | 24-08-2023 | 16-PA-CF-301 A | Pump Valve | Valve | 8 | Dis. Valve | 70.1 | 0.00131 |

# BHARAT PETROLEUM CORPORATION LIMITED, BINA-M.P.
## LDAR QUARTERLY REPORT FOR JULY 2023 TO SEPTEMBER 2023
### Monitoring - VOC Plant – HCU / DHDT

| S.No. | Date | Tag. No. | Equipment | Component | Line size (inch) | Location | Screening Value sv (ppm) | Estimated Emission Rate kg/day |
|---|---|---|---|---|---|---|---|---|
| COMPONENT - VALVE | | | | | | | | |
| 105 | 24-08-2023 | 16-PA-CF-402 A | Pump Valve | Valve | 3 | Dis. Valve | 23.9 | 0.00059 |
| 106 | 24-08-2023 | 16-PA-CF-402 B | Pump Valve | Valve | 3 | Dis. Valve | 86.7 | 0.00153 |
| 107 | 24-08-2023 | 16-PA-CF-102 A | Pump Valve | Valve | 6 | Dis. Valve | 3.6 | 0.00014 |
| 108 | 24-08-2023 | 16-PA-CF-102 B | Pump Valve | Valve | 6 | Dis. Valve | 52.1 | 0.00105 |
| 109 | 24-08-2023 | 16-PA-CF-405 | Pump Valve | Valve | 4 | Dis. Valve | 23.8 | 0.00058 |
| 110 | 24-08-2023 | 16-PA-CF-612 A | Pump Valve | Valve | 1 | Dis. Valve | 74.6 | 0.00137 |
| 111 | 24-08-2023 | 16-FV-1107 | Control Valve | Valve | 6 | Control Valve | 3.6 | 0.00014 |
| 112 | 24-08-2023 | 16-TV-8674 B | Control Valve | Valve | 8 | Control Valve | 26.1 | 0.00063 |
| 113 | 24-08-2023 | 16-FV-7601 | Control Valve | Valve | 4 | Control Valve | 73.2 | 0.00135 |
| 114 | 24-08-2023 | 16-PV-8702 B | Control Valve | Valve | 3 | Control Valve | 61.2 | 0.00118 |
| 115 | 24-08-2023 | 16-FV-8202 B | Control Valve | Valve | 6 | Control Valve | 53.1 | 0.00106 |
| 116 | 24-08-2023 | 16-FV-8502 | Control Valve | Valve | 3 | Control Valve | 4.3 | 0.00016 |
| 117 | 24-08-2023 | 16-FV-8001 | Control Valve | Valve | 3 | Control Valve | 6.1 | 0.00021 |
| 118 | 24-08-2023 | 16-FV-1105 | Control Valve | Valve | 6 | Control Valve | 23.4 | 0.00058 |
| 119 | 24-08-2023 | 16-FV-8601 | Control Valve | Valve | 3 | Control Valve | 26.5 | 0.00063 |
| 120 | 24-08-2023 | 16-FV-1101 | Control Valve | Valve | 8 | Control Valve | 30.6 | 0.00071 |
| 121 | 24-08-2023 | 16-FV-1103 | Control Valve | Valve | 4 | Control Valve | 90.4 | 0.00158 |
| 122 | 24-08-2023 | 16-FV-8672 | Control Valve | Valve | 4 | Control Valve | 813.6 | 0.00815 |
| 123 | 24-08-2023 | 16-FV-8673 | Control Valve | Valve | 3 | Control Valve | 40.6 | 0.00087 |
| 124 | 24-08-2023 | 16-FV-1106 | Control Valve | Valve | 4 | Control Valve | 23.1 | 0.00057 |
| 125 | 24-08-2023 | 16-TV-8674 A | Control Valve | Valve | 4 | Control Valve | 62.1 | 0.00120 |
| 126 | 24-08-2023 | 16-FV-8903 | Control Valve | Valve | 4 | Control Valve | 30.4 | 0.00070 |
| 127 | 24-08-2023 | 16-FV-8908 | Control Valve | Valve | 4 | Control Valve | 80.4 | 0.00145 |
| 128 | 24-08-2023 | 16-PV-6601 | Control Valve | Valve | 4 | Control Valve | 3103.0 | 0.02213 |
| 129 | 24-08-2023 | 16-FV-8901 | Control Valve | Valve | 4 | Control Valve | 36.6 | 0.00081 |
| 130 | 24-08-2023 | 16-FV-3104 | Control Valve | Valve | 4 | Control Valve | 3.5 | 0.00014 |
| 131 | 24-08-2023 | 16-FV-3103 N | Control Valve | Valve | 6 | Control Valve | 162.2 | 0.00245 |
| 132 | 24-08-2023 | 16-FV-7901 | Control Valve | Valve | 6 | Control Valve | 34.8 | 0.00078 |
| 133 | 24-08-2023 | 16-FV-3101 | Control Valve | Valve | 6 | Control Valve | 73.1 | 0.00135 |
| 134 | 24-08-2023 | 16-FV-7802 | Control Valve | Valve | 4 | Control Valve | 60.1 | 0.00117 |
| 135 | 24-08-2023 | 16-FV-6602 | Control Valve | Valve | 6 | Control Valve | 23.5 | 0.00058 |
| 136 | 24-08-2023 | 16-FV-89101 | Control Valve | Valve | 4 | Control Valve | 80.4 | 0.00145 |
| 137 | 24-08-2023 | 16-FV-6605 | Control Valve | Valve | 4 | Control Valve | 246.1 | 0.00334 |
| 138 | 24-08-2023 | 16-FV-7801 | Control Valve | Valve | 8 | Control Valve | 23.6 | 0.00058 |
| 139 | 24-08-2023 | 16-FV-3102 | Control Valve | Valve | 4 | Control Valve | 93.4 | 0.00162 |
| 140 | 24-08-2023 | 16-PV-9601 A | Control Valve | Valve | 2 | Control Valve | 20.1 | 0.00052 |
| 141 | 24-08-2023 | 16-PV-5102 B | Control Valve | Valve | 6 | Control Valve | 23.6 | 0.00058 |
| 142 | 24-08-2023 | 16-PV-5102 B | Control Valve | Valve | 6 | Control Valve | 80.1 | 0.00145 |
| 143 | 24-08-2023 | 16-LV-5302 B | Control Valve | Valve | 2 | Control Valve | 71.4 | 0.00133 |
| 144 | 24-08-2023 | 16-FV-7271 | Control Valve | Valve | 3 | Control Valve | 70.4 | 0.00131 |
| 145 | 24-08-2023 | 16-FV-5802 | Control Valve | Valve | 3 | Control Valve | 3417.0 | 0.02378 |
| 146 | 24-08-2023 | 16-FV-7103 | Control Valve | Valve | 6 | Control Valve | 93.4 | 0.00162 |
| 147 | 24-08-2023 | 16-FV-5705 | Control Valve | Valve | 6 | Control Valve | 13.6 | 0.00039 |
| 148 | 24-08-2023 | 16-FV-6201 | Control Valve | Valve | 4 | Control Valve | 2.2 | 0.00010 |
| 149 | 24-08-2023 | 16-FV-6001 | Control Valve | Valve | 4 | Control Valve | 879.6 | 0.00864 |
| 150 | 24-08-2023 | 16-FV-7702 | Control Valve | Valve | 4 | Control Valve | 36.2 | 0.00080 |
| 151 | 24-08-2023 | 16-PA CF-1603 | Pump Valve | Valve | 2 | Suc. Valve | 10.4 | 0.00032 |
| 152 | 24-08-2023 | 16-PA CF-1601 | Pump Valve | Valve | 2 | Suc. Valve | 6.6 | 0.00022 |
| 153 | 24-08-2023 | 16-PA CF-1101 A | Pump Valve | Valve | 8 | Suc. Valve | 110.2 | 0.00183 |
| 154 | 24-08-2023 | 16-PA CF-1101 B | Pump Valve | Valve | 8 | Suc. Valve | 36.5 | 0.00080 |
| 155 | 24-08-2023 | 16-PA-CF-509 B (N) | Pump Valve | Valve | 10 | Suc. Valve | 43.6 | 0.00092 |
| 156 | 24-08-2023 | 16-PA-CF-101 A(N) | Pump Valve | Valve | 8 | Suc. Valve | 93.1 | 0.00162 |

# BHARAT PETROLEUM CORPORATION LIMITED, BINA-M.P.
## LDAR QUARTERLY REPORT FOR JULY 2023 TO SEPTEMBER 2023
### Monitoring - VOC Plant – HCU / DHDT

| S.No. | Date | Tag. No. | Equipment | Component | Line size (inch) | Location | Screening Value sv (ppm) | Estimated Emission Rate kg/day |
|---|---|---|---|---|---|---|---|---|
| COMPONENT - VALVE | | | | | | | | |
| 157 | 24-08-2023 | 16-PA CF-1603 | Pump Valve | Valve | 2 | Dis. Valve | 123.6 | 0.00200 |
| 158 | 24-08-2023 | 16-PA CF-1601 | Pump Valve | Valve | 1 | Dis. Valve | 6.2 | 0.00021 |
| 159 | 24-08-2023 | 16-PA CF-1101 A | Pump Valve | Valve | 6 | Dis. Valve | 3.4 | 0.00014 |
| 160 | 24-08-2023 | 16-PA CF-1101 B | Pump Valve | Valve | 6 | Dis. Valve | 20.1 | 0.00052 |
| 161 | 24-08-2023 | 16-PA-CF-509 B (N) | Pump Valve | Valve | 8 | Dis. Valve | 6.3 | 0.00022 |
| 162 | 24-08-2023 | 16-PA-CF-101 A (N) | Pump Valve | Valve | 6 | Dis. Valve | 23.1 | 0.00057 |
| 163 | 24-08-2023 | 16-HBV-2507 | Control Valve | Valve | 4 | Control Valve | 60.2 | 0.00117 |
| 164 | 24-08-2023 | 16-HBV-2508 | Control Valve | Valve | 2 | Control Valve | 80.4 | 0.00145 |
| 165 | 24-08-2023 | 16-FBV-2171 | Control Valve | Valve | 6 | Control Valve | 13.6 | 0.00039 |
| 166 | 24-08-2023 | 16-FV-2271 | Control Valve | Valve | 3 | Control Valve | 3.6 | 0.00014 |
| 167 | 24-08-2023 | 16-PV-5374 | Control Valve | Valve | 4 | Control Valve | 80.1 | 0.00145 |
| 168 | 24-08-2023 | 16-PV-5373 | Control Valve | Valve | 8 | Control Valve | 46.2 | 0.00096 |
| 169 | 24-08-2023 | 16-FV-8403A | Control Valve | Valve | 6 | Control Valve | 5.5 | 0.00020 |
| 170 | 24-08-2023 | 16-FV-8403B | Control Valve | Valve | 3 | Control Valve | 2.6 | 0.00011 |
| 171 | 24-08-2023 | 16-TV-5878 | Control Valve | Valve | 2 | Control Valve | 47.3 | 0.00098 |
| 172 | 24-08-2023 | 16-FV-1171 | Control Valve | Valve | 6 | Control Valve | 12.5 | 0.00036 |
| 173 | 24-08-2023 | 16-TV-1272 A | Control Valve | Valve | 4 | Control Valve | 6.4 | 0.00022 |
| 174 | 24-08-2023 | 16-TV-1272 B | Control Valve | Valve | 3 | Control Valve | 90.1 | 0.00158 |
| 175 | 24-08-2023 | 16-PV-1271 B | Control Valve | Valve | 3 | Control Valve | 23.6 | 0.00058 |
| 176 | 24-08-2023 | 16-TV-3204 B | Control Valve | Valve | 2 | Control Valve | 80.7 | 0.00145 |
| 177 | 24-08-2023 | 16-FV-3701 N | Control Valve | Valve | 4 | Control Valve | 3.6 | 0.00014 |
| 178 | 24-08-2023 | 16-FV-3707 | Control Valve | Valve | 2 | Control Valve | 26.3 | 0.00063 |
| 179 | 24-08-2023 | 16-LV-6501 | Control Valve | Valve | 2 | Control Valve | 1.6 | 0.00008 |
| 180 | 24-08-2023 | 16-FV-7801 | Control Valve | Valve | 6 | Control Valve | 23.4 | 0.00058 |
| 181 | 24-08-2023 | 16-TV-1209 A | Control Valve | Valve | 6 | Control Valve | 80.4 | 0.00145 |
| 182 | 24-08-2023 | 16-TV-1209 B | Control Valve | Valve | 4 | Control Valve | 26.1 | 0.00063 |
| 183 | 24-08-2023 | 16-LV-1271 | Control Valve | Valve | 2 | Control Valve | 23.6 | 0.00058 |
| 184 | 24-08-2023 | 16-TV-2918 A | Control Valve | Valve | 3 | Control Valve | 60.3 | 0.00117 |
| 185 | 24-08-2023 | 16-TV-3204 A | Control Valve | Valve | 4 | Control Valve | 2.6 | 0.00011 |
| 186 | 24-08-2023 | 16-PBV-6101 N | Control Valve | Valve | 6 | Control Valve | 90.7 | 0.00159 |
| 187 | 24-08-2023 | 16-FV-1102 N | Control Valve | Valve | 8 | Control Valve | 26.5 | 0.00063 |
| 188 | 24-08-2023 | 16-PV-1271 A | Control Valve | Valve | 6 | Control Valve | 3.6 | 0.00014 |
| 189 | 24-08-2023 | 16-FV-2605 | Control Valve | Valve | 2 | Control Valve | 80.4 | 0.00145 |
| 190 | 24-08-2023 | 16-PV-3402 B | Control Valve | Valve | 3 | Control Valve | 63.1 | 0.00121 |
| 191 | 24-08-2023 | 16-LV-4904 N | Control Valve | Valve | 4 | Control Valve | 66.2 | 0.00125 |
| 192 | 24-08-2023 | 16-LV-5102 | Control Valve | Valve | 6 | Control Valve | 714.2 | 0.00740 |
| 193 | 24-08-2023 | 16-FV-8909 | Control Valve | Valve | 4 | Control Valve | 23.6 | 0.00058 |
| 194 | 24-08-2023 | 16-LV-5302 F | Control Valve | Valve | 8 | Control Valve | 3.5 | 0.00014 |
| 195 | 24-08-2023 | 16-FV-5871 | Control Valve | Valve | 6 | Control Valve | 90.1 | 0.00158 |
| 196 | 24-08-2023 | 16-FV-6001 | Control Valve | Valve | 4 | Control Valve | 23.5 | 0.00058 |
| 197 | 24-08-2023 | 16-FV-6671 | Control Valve | Valve | 4 | Control Valve | 63.5 | 0.00122 |
| 198 | 24-08-2023 | 16-LV-7201 | Control Valve | Valve | 8 | Control Valve | 23.4 | 0.00058 |
| 199 | 24-08-2023 | 16-FV-7401 | Control Valve | Valve | 3 | Control Valve | 13.2 | 0.00038 |
| 200 | 24-08-2023 | 16-FV-8801 | Control Valve | Valve | 2 | Control Valve | 50.6 | 0.00103 |
| 201 | 24-08-2023 | 16-PV-8102 | Control Valve | Valve | 3 | Control Valve | 62.1 | 0.00120 |
| 202 | 24-08-2023 | 16-PV-8101 | Control Valve | Valve | 4 | Control Valve | 23.6 | 0.00058 |
| 203 | 24-08-2023 | 16-FV-8405 | Control Valve | Valve | 6 | Control Valve | 156.3 | 0.00238 |
| 204 | 24-08-2023 | 16-PV-8502 A | Control Valve | Valve | 8 | Control Valve | 803.2 | 0.00807 |
| 205 | 24-08-2023 | 16-FV-6601 | Control Valve | Valve | 2 | Control Valve | 16.2 | 0.00044 |
| 206 | 24-08-2023 | 16-FV-9401 | Control Valve | Valve | 3 | Control Valve | 4.6 | 0.00017 |
| 207 | 24-08-2023 | 16-PV-3171 | Control Valve | Valve | 4 | Control Valve | 3.5 | 0.00014 |
| 208 | 24-08-2023 | 16-FV-1273 | Control Valve | Valve | 4 | Control Valve | 89.8 | 0.00157 |
| 209 | 24-08-2023 | 16-FV-1571 | Control Valve | Valve | 6 | Control Valve | 7.7 | 0.00025 |
| 210 | 24-08-2023 | 16-FV-2171 | Control Valve | Valve | 4 | Control Valve | 60.1 | 0.00117 |

# BHARAT PETROLEUM CORPORATION LIMITED, BINA-M.P.
## LDAR QUARTERLY REPORT FOR JULY 2023 TO SEPTEMBER 2023
### Monitoring - VOC Plant – HCU / DHDT

| S.No. | Date | Tag. No. | Equipment | Component | Line size (inch) | Location | Screening Value sv (ppm) | Estimated Emission Rate kg/day |
|---|---|---|---|---|---|---|---|---|
| COMPONENT - VALVE | | | | | | | | |
| 211 | 24-08-2023 | 16-PV-5803 | Control Valve | Valve | 4 | Control Valve | 3405.0 | 0.02371 |
| 212 | 24-08-2023 | 16-TV-8674 B | Control Valve | Valve | 6 | Bypass Valve | 69.6 | 0.00130 |
| 213 | 24-08-2023 | 16-FV-7601 | Control Valve | Valve | 2 | Bypass Valve | 3.4 | 0.00014 |
| 214 | 24-08-2023 | 16-PV-8702 B | Control Valve | Valve | 2 | Bypass Valve | 16.5 | 0.00044 |
| 215 | 24-08-2023 | 16-FV-8202 B | Control Valve | Valve | 4 | Bypass Valve | 26.2 | 0.00063 |
| 216 | 24-08-2023 | 16-FV-8502 | Control Valve | Valve | 3 | Bypass Valve | 13.5 | 0.00038 |
| 217 | 24-08-2023 | 16-FV-8001 | Control Valve | Valve | 3 | Bypass Valve | 62.4 | 0.00120 |
| 218 | 24-08-2023 | 16-FV-1105 | Control Valve | Valve | 4 | Bypass Valve | 80.1 | 0.00145 |
| 219 | 24-08-2023 | 16-FV-8601 | Control Valve | Valve | 2 | Bypass Valve | 46.5 | 0.00096 |
| 220 | 24-08-2023 | 16-FV-1101 | Control Valve | Valve | 6 | Bypass Valve | 23.6 | 0.00058 |
| 221 | 24-08-2023 | 16-FV-1103 | Control Valve | Valve | 2 | Bypass Valve | 9.4 | 0.00029 |
| 222 | 24-08-2023 | 16-FV-8672 | Control Valve | Valve | 2 | Bypass Valve | 2.6 | 0.00011 |
| 223 | 24-08-2023 | 16-FV-8673 | Control Valve | Valve | 2 | Bypass Valve | 13.6 | 0.00039 |
| 224 | 24-08-2023 | 16-FV-1106 | Control Valve | Valve | 2 | Bypass Valve | 5.2 | 0.00019 |
| 225 | 24-08-2023 | 16-TV-8674 A | Control Valve | Valve | 2 | Bypass Valve | 13.6 | 0.00039 |
| 226 | 24-08-2023 | 16-FV-8903 | Control Valve | Valve | 2 | Bypass Valve | 66.6 | 0.00126 |
| 227 | 24-08-2023 | 16-FV-8908 | Control Valve | Valve | 2 | Bypass Valve | 135.6 | 0.00214 |
| 228 | 24-08-2023 | 16-PV-6601 | Control Valve | Valve | 2 | Bypass Valve | 23.1 | 0.00057 |
| 229 | 24-08-2023 | 16-FV-8901 | Control Valve | Valve | 2 | Bypass Valve | 20.5 | 0.00052 |
| 230 | 24-08-2023 | 16-FV-3104 | Control Valve | Valve | 2 | Bypass Valve | 6.6 | 0.00022 |
| 231 | 24-08-2023 | 16-FV-3103 N | Control Valve | Valve | 4 | Bypass Valve | 13.4 | 0.00038 |
| 232 | 24-08-2023 | 16-FV-7901 | Control Valve | Valve | 4 | Bypass Valve | 20.5 | 0.00052 |
| 233 | 24-08-2023 | 16-FV-3101 | Control Valve | Valve | 4 | Bypass Valve | 93.4 | 0.00162 |
| 234 | 24-08-2023 | 16-FV-7802 | Control Valve | Valve | 2 | Bypass Valve | 156.2 | 0.00238 |
| 235 | 24-08-2023 | 16-FV-6602 | Control Valve | Valve | 4 | Bypass Valve | 3.5 | 0.00014 |
| 236 | 24-08-2023 | 16-FV-89101 | Control Valve | Valve | 2 | Bypass Valve | 13.2 | 0.00038 |
| 237 | 24-08-2023 | 16-FV-6605 | Control Valve | Valve | 2 | Bypass Valve | 30.2 | 0.00070 |
| 238 | 24-08-2023 | 16-FV-7801 | Control Valve | Valve | 6 | Bypass Valve | 70.4 | 0.00131 |
| 239 | 24-08-2023 | 16-FV-3102 | Control Valve | Valve | 2 | Bypass Valve | 13.6 | 0.00039 |
| 240 | 24-08-2023 | 16-PV-9601 A | Control Valve | Valve | 2 | Bypass Valve | 93.2 | 0.00162 |
| 241 | 24-08-2023 | 16-PV-5102 B | Control Valve | Valve | 4 | Bypass Valve | 16.4 | 0.00044 |
| 242 | 24-08-2023 | 16-PV-5102 B | Control Valve | Valve | 4 | Bypass Valve | 23.8 | 0.00058 |
| 243 | 24-08-2023 | 16-LV-5302 B | Control Valve | Valve | 2 | Bypass Valve | 6.4 | 0.00022 |
| 244 | 24-08-2023 | 16-FV-7271 | Control Valve | Valve | 2 | Bypass Valve | 30.1 | 0.00070 |
| 245 | 24-08-2023 | 16-FV-5802 | Control Valve | Valve | 2 | Bypass Valve | 26.6 | 0.00064 |
| 246 | 24-08-2023 | 16-FV-7103 | Control Valve | Valve | 4 | Bypass Valve | 2.3 | 0.00010 |
| 247 | 24-08-2023 | 16-FV-5705 | Control Valve | Valve | 4 | Bypass Valve | 61.4 | 0.00119 |
| 248 | 24-08-2023 | 16-FV-6201 | Control Valve | Valve | 2 | Bypass Valve | 2.5 | 0.00011 |
| 249 | 24-08-2023 | 16-FV-6001 | Control Valve | Valve | 2 | Bypass Valve | 3.5 | 0.00014 |
| 250 | 24-08-2023 | 16-FV-7702 | Control Valve | Valve | 2 | Bypass Valve | 8.4 | 0.00027 |
| 251 | 24-08-2023 | 16-HBV-2507 | Control Valve | Valve | 2 | Bypass Valve | 93.7 | 0.00163 |
| 252 | 24-08-2023 | 16-HBV-2508 | Control Valve | Valve | 2 | Bypass Valve | 13.2 | 0.00038 |
| 253 | 24-08-2023 | 16-FBV-2171 | Control Valve | Valve | 6 | Bypass Valve | 60.3 | 0.00117 |
| 254 | 24-08-2023 | 16-FV-2271 | Control Valve | Valve | 6 | Bypass Valve | 46.3 | 0.00096 |
| 255 | 24-08-2023 | 16-PV-5374 | Control Valve | Valve | 8 | Bypass Valve | 10.2 | 0.00031 |
| 256 | 24-08-2023 | 16-PV-5373 | Control Valve | Valve | 6 | Bypass Valve | 56.4 | 0.00111 |
| 257 | 24-08-2023 | 16-FV-8403A | Control Valve | Valve | 4 | Bypass Valve | 3.6 | 0.00014 |
| 258 | 24-08-2023 | 16-FV-8403B | Control Valve | Valve | 3 | Bypass Valve | 90.4 | 0.00158 |
| 259 | 24-08-2023 | 16-TV-5878 | Control Valve | Valve | 2 | Bypass Valve | 13.7 | 0.00039 |
| 260 | 24-08-2023 | 16-FV-1171 | Control Valve | Valve | 4 | Bypass Valve | 83.9 | 0.00150 |
| 261 | 24-08-2023 | 16-TV-1272 A | Control Valve | Valve | 2 | Bypass Valve | 64.2 | 0.00123 |
| 262 | 24-08-2023 | 16-TV-1272 B | Control Valve | Valve | 2 | Bypass Valve | 156.2 | 0.00238 |

# BHARAT PETROLEUM CORPORATION LIMITED, BINA-M.P.
## LDAR QUARTERLY REPORT FOR JULY 2023 TO SEPTEMBER 2023
### Monitoring - VOC Plant – HCU / DHDT

| S.No. | Date | Tag. No. | Equipment | Component | Line size (inch) | Location | Screening Value sv (ppm) | Estimated Emission Rate kg/day |
|---|---|---|---|---|---|---|---|---|
| COMPONENT - VALVE | | | | | | | | |
| 263 | 24-08-2023 | 16-PV-1271 B | Control Valve | Valve | 2 | Bypass Valve | 34.1 | 0.00076 |
| 264 | 24-08-2023 | 16-TV-3204 B | Control Valve | Valve | 2 | Bypass Valve | 63.3 | 0.00121 |
| 265 | 24-08-2023 | 16-FV-3701 N | Control Valve | Valve | 2 | Bypass Valve | 80.2 | 0.00145 |
| 266 | 24-08-2023 | 16-FV-3707 | Control Valve | Valve | 2 | Bypass Valve | 36.6 | 0.00081 |
| 267 | 24-08-2023 | 16-LV-6501 | Control Valve | Valve | 2 | Bypass Valve | 123.2 | 0.00199 |
| 268 | 24-08-2023 | 16-FV-7801 | Control Valve | Valve | 4 | Bypass Valve | 6.4 | 0.00022 |
| 269 | 24-08-2023 | 16-TV-1209 A | Control Valve | Valve | 4 | Bypass Valve | 3.5 | 0.00014 |
| 270 | 24-08-2023 | 16-TV-1209 B | Control Valve | Valve | 2 | Bypass Valve | 2.1 | 0.00010 |
| 271 | 24-08-2023 | 16-LV-1271 | Control Valve | Valve | 2 | Bypass Valve | 807.9 | 0.00811 |
| 272 | 24-08-2023 | 16-TV-2918 A | Control Valve | Valve | 3 | Bypass Valve | 9.6 | 0.00030 |
| 273 | 24-08-2023 | 16-TV-3204 A | Control Valve | Valve | 2 | Bypass Valve | 15.4 | 0.00042 |
| 274 | 24-08-2023 | 16-PBV-6101 N | Control Valve | Valve | 4 | Bypass Valve | 93.5 | 0.00162 |
| 275 | 24-08-2023 | 16-FV-1102 N | Control Valve | Valve | 6 | Bypass Valve | 23.6 | 0.00058 |
| 276 | 24-08-2023 | 16-PV-1271 A | Control Valve | Valve | 4 | Bypass Valve | 50.2 | 0.00102 |
| 277 | 24-08-2023 | 16-FV-2605 | Control Valve | Valve | 2 | Bypass Valve | 13.6 | 0.00039 |
| 278 | 24-08-2023 | 16-PV-3402 B | Control Valve | Valve | 3 | Bypass Valve | 93.4 | 0.00162 |
| 279 | 24-08-2023 | 16-LV-4904 N | Control Valve | Valve | 2 | Bypass Valve | 12.5 | 0.00036 |
| 280 | 24-08-2023 | 16-LV-5102 | Control Valve | Valve | 4 | Bypass Valve | 6.2 | 0.00021 |
| **Total VOC Emission from Valves** | | | | | | | | **0.35807** |

# BHARAT PETROLEUM CORPORATION LIMITED, BINA-M.P.
## LDAR QUARTERLY REPORT FOR JULY 2023 TO SEPTEMBER 2023
### Monitoring - VOC Plant – HCU / DHDT

| S.No. | Date | Tag. No. | Equipment | Component | Line size (inch) | Location | Screening Value sv (ppm) | Estimated Emission Rate kg/day |
|---|---|---|---|---|---|---|---|---|
| COMPONENT - PSV | | | | | | | | |
| 1 | 24-08-2023 | 16-PSV-9802 A | PSV | Flange | 6 | Inlet | 80.6 | 0.00242 |
| | 24-08-2023 | 16-PSV-9802 A | PSV | Flange | 6 | Outlet | 23.4 | 0.00102 |
| 2 | 24-08-2023 | 16-PSV-9802 B | PSV | Flange | 10 | Inlet | 136.5 | 0.00351 |
| | 24-08-2023 | 16-PSV-9802 B | PSV | Flange | 10 | Outlet | 80.6 | 0.00242 |
| 3 | 24-08-2023 | 16-PSV-9802 C | PSV | Flange | 8 | Inlet | 93.4 | 0.00269 |
| | 24-08-2023 | 16-PSV-9802 C | PSV | Flange | 8 | Outlet | 13.5 | 0.00069 |
| 4 | 24-08-2023 | 16-PSV-9805 A | PSV | Flange | 6 | Inlet | 26.6 | 0.00111 |
| | 24-08-2023 | 16-PSV-9805 A | PSV | Flange | 6 | Outlet | 715.5 | 0.01124 |
| 5 | 24-08-2023 | 16-PSV-9805 B | PSV | Flange | 4 | Inlet | 23.6 | 0.00102 |
| | 24-08-2023 | 16-PSV-9805 B | PSV | Flange | 4 | Outlet | 6.4 | 0.00041 |
| 6 | 24-08-2023 | 16-PSV-9804 A | PSV | Flange | 2 | Inlet | 23.5 | 0.00102 |
| | 24-08-2023 | 16-PSV-9804 A | PSV | Flange | 2 | Outlet | 80.6 | 0.00242 |
| 7 | 24-08-2023 | 16-PSV-9804 B | PSV | Flange | 3 | Inlet | 73.1 | 0.00226 |
| | 24-08-2023 | 16-PSV-9804 B | PSV | Flange | 3 | Outlet | 215.6 | 0.00484 |
| 8 | 24-08-2023 | 16-PSV-9902 A | PSV | Flange | 12 | Inlet | 32.2 | 0.00127 |
| | 24-08-2023 | 16-PSV-9902 A | PSV | Flange | 12 | Outlet | 20.3 | 0.00092 |
| 9 | 24-08-2023 | 16-PSV-9902 B | PSV | Flange | 6 | Inlet | 63.1 | 0.00204 |
| | 24-08-2023 | 16-PSV-9902 B | PSV | Flange | 6 | Outlet | 20.5 | 0.00092 |
| 10 | 24-08-2023 | 16-PSV-9902 C | PSV | Flange | 8 | Inlet | 73.4 | 0.00227 |
| | 24-08-2023 | 16-PSV-9902 C | PSV | Flange | 8 | Outlet | 5.6 | 0.00037 |
| 11 | 24-08-2023 | 16-PSV-9905 A | PSV | Flange | 6 | Inlet | 133.9 | 0.00346 |
| | 24-08-2023 | 16-PSV-9905 A | PSV | Flange | 6 | Outlet | 86.4 | 0.00254 |
| 12 | 24-08-2023 | 16-PSV-9905 B | PSV | Flange | 4 | Inlet | 46.1 | 0.00163 |
| | 24-08-2023 | 16-PSV-9905 B | PSV | Flange | 4 | Outlet | 2.5 | 0.00021 |
| 13 | 24-08-2023 | 16-PSV-9905 C | PSV | Flange | 6 | Inlet | 46.8 | 0.00165 |
| | 24-08-2023 | 16-PSV-9905 C | PSV | Flange | 6 | Outlet | 91.4 | 0.00265 |
| 14 | 24-08-2023 | 16-PSV-9904 A | PSV | Flange | 4 | Inlet | 23.5 | 0.00102 |
| | 24-08-2023 | 16-PSV-9904 A | PSV | Flange | 4 | Outlet | 73.6 | 0.00227 |
| 15 | 24-08-2023 | 16-PSV-9904 B | PSV | Flange | 4 | Inlet | 243.2 | 0.00526 |
| | 24-08-2023 | 16-PSV-9904 B | PSV | Flange | 4 | Outlet | 30.6 | 0.00123 |
| 16 | 24-08-2023 | 16-PSV-9904 C | PSV | Flange | 2 | Inlet | 36.4 | 0.00138 |
| | 24-08-2023 | 16-PSV-9904 C | PSV | Flange | 2 | Outlet | 13.2 | 0.00068 |
| 17 | 24-08-2023 | 16-PSV-4801 A | PSV | Flange | 4 | Inlet | 5.5 | 0.00037 |
| | 24-08-2023 | 16-PSV-4801 A | PSV | Flange | 4 | Outlet | 93.1 | 0.00268 |
| 18 | 24-08-2023 | 16-PSV-4801 B | PSV | Flange | 6 | Inlet | 42.5 | 0.00154 |
| | 24-08-2023 | 16-PSV-4801 B | PSV | Flange | 6 | Outlet | 23.6 | 0.00102 |
| 19 | 24-08-2023 | 16-PSV-2201 A | PSV | Flange | 8 | Inlet | 51.1 | 0.00176 |
| | 24-08-2023 | 16-PSV-2201 A | PSV | Flange | 8 | Outlet | 23.2 | 0.00101 |
| 20 | 24-08-2023 | 16-PSV-2201 B | PSV | Flange | 10 | Inlet | 30.6 | 0.00123 |
| | 24-08-2023 | 16-PSV-2201 B | PSV | Flange | 10 | Outlet | 43.1 | 0.00156 |
| 21 | 24-08-2023 | 16-PSV-2301 A | PSV | Flange | 8 | Inlet | 52.1 | 0.00178 |
| | 24-08-2023 | 16-PSV-2301 A | PSV | Flange | 8 | Outlet | 3.9 | 0.00029 |
| 22 | 24-08-2023 | 16-PSV-2301 B | PSV | Flange | 6 | Inlet | 80.4 | 0.00242 |
| | 24-08-2023 | 16-PSV-2301 B | PSV | Flange | 6 | Outlet | 26.3 | 0.00110 |
| 23 | 24-08-2023 | 16-PSV-5202 A | PSV | Flange | 4 | Inlet | 6.5 | 0.00041 |
| | 24-08-2023 | 16-PSV-5202 A | PSV | Flange | 4 | Outlet | 23.5 | 0.00102 |
| 24 | 24-08-2023 | 16-PSV-5202 B | PSV | Flange | 6 | Inlet | 80.4 | 0.00242 |
| | 24-08-2023 | 16-PSV-5202 B | PSV | Flange | 6 | Outlet | 23.6 | 0.00102 |
| 25 | 24-08-2023 | 16-PSV-2003 A | PSV | Flange | 2 | Inlet | 99.6 | 0.00281 |
| | 24-08-2023 | 16-PSV-2003 A | PSV | Flange | 2 | Outlet | 71.4 | 0.00222 |

# BHARAT PETROLEUM CORPORATION LIMITED, BINA-M.P.
## LDAR QUARTERLY REPORT FOR JULY 2023 TO SEPTEMBER 2023
### Monitoring - VOC Plant – HCU / DHDT

| S.No. | Date | Tag. No. | Equipment | Component | Line size (inch) | Location | Screening Value sv (ppm) | Estimated Emission Rate kg/day |
|---|---|---|---|---|---|---|---|---|
| COMPONENT - PSV | | | | | | | | |
| 26 | 24-08-2023 | 16-PSV-2003 B | PSV | Flange | 3 | Inlet | 50.1 | 0.00173 |
| | 24-08-2023 | 16-PSV-2003 B | PSV | Flange | 3 | Outlet | 29.5 | 0.00119 |
| 27 | 24-08-2023 | 16-PSV-2002 | PSV | Flange | 12 | Inlet | 13.2 | 0.00068 |
| | 24-08-2023 | 16-PSV-2002 | PSV | Flange | 12 | Outlet | 30.6 | 0.00123 |
| 28 | 24-08-2023 | 16-PSV-2001 | PSV | Flange | 6 | Inlet | 42.1 | 0.00153 |
| | 24-08-2023 | 16-PSV-2001 | PSV | Flange | 6 | Outlet | 13.2 | 0.00068 |
| 29 | 24-08-2023 | 16-PSV-1601 | PSV | Flange | 8 | Inlet | 50.4 | 0.00174 |
| | 24-08-2023 | 16-PSV-1601 | PSV | Flange | 8 | Outlet | 12.7 | 0.00066 |
| 30 | 24-08-2023 | 16-PSV-1611 | PSV | Flange | 10 | Inlet | 80.1 | 0.00241 |
| | 24-08-2023 | 16-PSV-1611 | PSV | Flange | 10 | Outlet | 24.6 | 0.00105 |
| 31 | 24-08-2023 | 16-PSV-1609 | PSV | Flange | 8 | Inlet | 456.2 | 0.00819 |
| | 24-08-2023 | 16-PSV-1609 | PSV | Flange | 8 | Outlet | 31.2 | 0.00124 |
| 32 | 24-08-2023 | 16-PSV-1602 | PSV | Flange | 6 | Inlet | 20.5 | 0.00092 |
| | 24-08-2023 | 16-PSV-1602 | PSV | Flange | 6 | Outlet | 80.4 | 0.00242 |
| 33 | 24-08-2023 | 16-PSV-9301 A | PSV | Flange | 4 | Inlet | 15.4 | 0.00076 |
| | 24-08-2023 | 16-PSV-9301 A | PSV | Flange | 4 | Outlet | 72.1 | 0.00224 |
| 34 | 24-08-2023 | 16-PSV-9501 A | PSV | Flange | 8 | Inlet | 56.2 | 0.00188 |
| | 24-08-2023 | 16-PSV-9501 A | PSV | Flange | 8 | Outlet | 5.4 | 0.00036 |
| 35 | 24-08-2023 | 16-PSV-9501 B | PSV | Flange | 6 | Inlet | 26.9 | 0.00112 |
| | 24-08-2023 | 16-PSV-9501 B | PSV | Flange | 6 | Outlet | 88.4 | 0.00258 |
| 36 | 24-08-2023 | 16-PSV-5301 A | PSV | Flange | 2 | Inlet | 51.7 | 0.00177 |
| | 24-08-2023 | 16-PSV-5301 A | PSV | Flange | 2 | Outlet | 23.6 | 0.00102 |
| 37 | 24-08-2023 | 16-PSV-5301 B | PSV | Flange | 3 | Inlet | 10.5 | 0.00058 |
| | 24-08-2023 | 16-PSV-5301 B | PSV | Flange | 3 | Outlet | 43.6 | 0.00157 |
| 38 | 24-08-2023 | 16-PSV-9501 | PSV | Flange | 8 | Inlet | 64.1 | 0.00206 |
| | 24-08-2023 | 16-PSV-9501 | PSV | Flange | 8 | Outlet | 80.4 | 0.00242 |
| 39 | 24-08-2023 | 16-PSV-5201 A | PSV | Flange | 12 | Inlet | 5520.0 | 0.04726 |
| | 24-08-2023 | 16-PSV-5201 A | PSV | Flange | 12 | Outlet | 23.8 | 0.00103 |
| 40 | 24-08-2023 | 16-PSV-5201 B | PSV | Flange | 10 | Inlet | 91.4 | 0.00265 |
| | 24-08-2023 | 16-PSV-5201 B | PSV | Flange | 10 | Outlet | 156.2 | 0.00386 |
| 41 | 24-08-2023 | 16-PSV-4501 A | PSV | Flange | 8 | Inlet | 36.2 | 0.00138 |
| | 24-08-2023 | 16-PSV-4501 A | PSV | Flange | 8 | Outlet | 5.3 | 0.00036 |
| 42 | 24-08-2023 | 16-PSV-4501 B | PSV | Flange | 6 | Inlet | 62.1 | 0.00202 |
| | 24-08-2023 | 16-PSV-4501 B | PSV | Flange | 6 | Outlet | 13.2 | 0.00068 |
| 43 | 24-08-2023 | 16-PSV-401 A | PSV | Flange | 6 | Inlet | 50.4 | 0.00174 |
| | 24-08-2023 | 16-PSV-401 A | PSV | Flange | 6 | Outlet | 26.3 | 0.00110 |
| 44 | 24-08-2023 | 16-PSV-401 B | PSV | Flange | 8 | Inlet | 8.4 | 0.00049 |
| | 24-08-2023 | 16-PSV-401 B | PSV | Flange | 8 | Outlet | 15.6 | 0.00076 |
| 45 | 24-08-2023 | 16-PSV-9302 | PSV | Flange | 4 | Inlet | 23.1 | 0.00101 |
| | 24-08-2023 | 16-PSV-9302 | PSV | Flange | 4 | Outlet | 46.2 | 0.00164 |
| 46 | 24-08-2023 | 16-PSV-4802 | PSV | Flange | 6 | Inlet | 50.1 | 0.00173 |
| | 24-08-2023 | 16-PSV-4802 | PSV | Flange | 6 | Outlet | 23.1 | 0.00101 |
| 47 | 24-08-2023 | 16-PSV-8801 | PSV | Flange | 3 | Inlet | 6.5 | 0.00041 |
| | 24-08-2023 | 16-PSV-8801 | PSV | Flange | 3 | Outlet | 47.8 | 0.00168 |
| 48 | 24-08-2023 | 16-PSV-8701 | PSV | Flange | 4 | Inlet | 90.1 | 0.00262 |
| | 24-08-2023 | 16-PSV-8701 | PSV | Flange | 4 | Outlet | 23.4 | 0.00102 |
| 49 | 24-08-2023 | 16-PSV-7803 A | PSV | Flange | 8 | Inlet | 56.4 | 0.00188 |
| | 24-08-2023 | 16-PSV-7803 A | PSV | Flange | 8 | Outlet | 3.2 | 0.00025 |
| 50 | 24-08-2023 | 16-PSV-7803 B | PSV | Flange | 6 | Inlet | 80.4 | 0.00242 |
| | 24-08-2023 | 16-PSV-7803 B | PSV | Flange | 6 | Outlet | 15.2 | 0.00075 |
| 51 | 24-08-2023 | 16-PSV-6202 | PSV | Flange | 12 | Inlet | 13.5 | 0.00069 |
| | 24-08-2023 | 16-PSV-6202 | PSV | Flange | 12 | Outlet | 26.4 | 0.00110 |

# BHARAT PETROLEUM CORPORATION LIMITED, BINA-M.P.
## LDAR QUARTERLY REPORT FOR JULY 2023 TO SEPTEMBER 2023
### Monitoring - VOC Plant – HCU / DHDT

| S.No. | Date | Tag. No. | Equipment | Component | Line size (inch) | Location | Screening Value sv (ppm) | Estimated Emission Rate kg/day |
|---|---|---|---|---|---|---|---|---|
| COMPONENT - PSV | | | | | | | | |
| 52 | 24-08-2023 | 16-PSV-8901 A | PSV | Flange | 10 | Inlet | 122.4 | 0.00325 |
| | 24-08-2023 | 16-PSV-8901 A | PSV | Flange | 10 | Outlet | 63.8 | 0.00205 |
| 53 | 24-08-2023 | 16-PSV-8901 B | PSV | Flange | 8 | Inlet | 9.4 | 0.00053 |
| | 24-08-2023 | 16-PSV-8901 B | PSV | Flange | 8 | Outlet | 23.7 | 0.00102 |
| 54 | 24-08-2023 | 16-PSV-7601 A | PSV | Flange | 6 | Inlet | 346.8 | 0.00675 |
| | 24-08-2023 | 16-PSV-7601 A | PSV | Flange | 6 | Outlet | 90.1 | 0.00262 |
| 55 | 24-08-2023 | 16-PSV-7601 B | PSV | Flange | 4 | Inlet | 23.6 | 0.00102 |
| | 24-08-2023 | 16-PSV-7601 B | PSV | Flange | 4 | Outlet | 6.4 | 0.00041 |
| 56 | 24-08-2023 | 16-PSV-6901 | PSV | Flange | 6 | Inlet | 23.8 | 0.00103 |
| | 24-08-2023 | 16-PSV-6901 | PSV | Flange | 6 | Outlet | 70.6 | 0.00221 |
| 57 | 24-08-2023 | 16-PSV-9603 | PSV | Flange | 8 | Inlet | 39.3 | 0.00146 |
| | 24-08-2023 | 16-PSV-9603 | PSV | Flange | 8 | Outlet | 21.1 | 0.00094 |
| 58 | 24-08-2023 | 16-PSV-9701 A | PSV | Flange | 12 | Inlet | 23.6 | 0.00102 |
| | 24-08-2023 | 16-PSV-9701 A | PSV | Flange | 12 | Outlet | 3.4 | 0.00026 |
| 59 | 24-08-2023 | 16-PSV-9603 A | PSV | Flange | 2 | Inlet | 20.1 | 0.00091 |
| | 24-08-2023 | 16-PSV-9603 A | PSV | Flange | 2 | Outlet | 36.5 | 0.00139 |
| 60 | 24-08-2023 | 16-PSV-9603 B | PSV | Flange | 8 | Inlet | 43.8 | 0.00158 |
| | 24-08-2023 | 16-PSV-9603 B | PSV | Flange | 8 | Outlet | 93.1 | 0.00268 |
| 61 | 24-08-2023 | 16-PSV-9603 C | PSV | Flange | 6 | Inlet | 40.6 | 0.00150 |
| | 24-08-2023 | 16-PSV-9603 C | PSV | Flange | 6 | Outlet | 23.6 | 0.00102 |
| 62 | 24-08-2023 | 16-PSV-9702 A | PSV | Flange | 4 | Inlet | 80.4 | 0.00242 |
| | 24-08-2023 | 16-PSV-9702 A | PSV | Flange | 4 | Outlet | 16.5 | 0.00079 |
| 63 | 24-08-2023 | 16-PSV-9702 B | PSV | Flange | 6 | Inlet | 23.7 | 0.00102 |
| | 24-08-2023 | 16-PSV-9702 B | PSV | Flange | 6 | Outlet | 80.4 | 0.00242 |
| 64 | 24-08-2023 | 16-PSV-9702 C | PSV | Flange | 4 | Inlet | 13.6 | 0.00069 |
| | 24-08-2023 | 16-PSV-9702 C | PSV | Flange | 4 | Outlet | 93.1 | 0.00268 |
| 65 | 24-08-2023 | 16-PSV-9705 A | PSV | Flange | 6 | Inlet | 46.2 | 0.00164 |
| | 24-08-2023 | 16-PSV-9705 A | PSV | Flange | 6 | Outlet | 133.6 | 0.00345 |
| 66 | 24-08-2023 | 16-PSV-9705 B | PSV | Flange | 8 | Inlet | 50.1 | 0.00173 |
| | 24-08-2023 | 16-PSV-9705 B | PSV | Flange | 8 | Outlet | 23.2 | 0.00101 |
| 67 | 24-08-2023 | 16-PSV-9705 C | PSV | Flange | 4 | Inlet | 80.7 | 0.00242 |
| | 24-08-2023 | 16-PSV-9705 C | PSV | Flange | 4 | Outlet | 93.4 | 0.00269 |
| 68 | 24-08-2023 | 16-PSV-9704 A | PSV | Flange | 6 | Inlet | 15.2 | 0.00075 |
| | 24-08-2023 | 16-PSV-9704 A | PSV | Flange | 6 | Outlet | 63.4 | 0.00205 |
| 69 | 24-08-2023 | 16-PSV-9704 B | PSV | Flange | 4 | Inlet | 20.3 | 0.00092 |
| | 24-08-2023 | 16-PSV-9704 B | PSV | Flange | 4 | Outlet | 90.4 | 0.00262 |
| 70 | 24-08-2023 | 16-PSV-9704 C | PSV | Flange | 8 | Inlet | 25.4 | 0.00108 |
| | 24-08-2023 | 16-PSV-9704 C | PSV | Flange | 8 | Outlet | 16.5 | 0.00079 |
| 71 | 24-08-2023 | 16-PSV-9701 B | PSV | Flange | 6 | Inlet | 123.6 | 0.00327 |
| | 24-08-2023 | 16-PSV-9701 B | PSV | Flange | 6 | Outlet | 50.6 | 0.00175 |
| 72 | 24-08-2023 | 16-PSV-9701 C | PSV | Flange | 4 | Inlet | 79.4 | 0.00240 |
| | 24-08-2023 | 16-PSV-9701 C | PSV | Flange | 4 | Outlet | 56.5 | 0.00189 |
| 73 | 24-08-2023 | 16-PSV-9972A | PSV | Flange | 2 | Inlet | 26.1 | 0.00110 |
| | 24-08-2023 | 16-PSV-9972A | PSV | Flange | 2 | Outlet | 23.4 | 0.00102 |
| 74 | 24-08-2023 | 16-PSV-9972B | PSV | Flange | 3 | Inlet | 60.4 | 0.00198 |
| | 24-08-2023 | 16-PSV-9972B | PSV | Flange | 3 | Outlet | 13.7 | 0.00070 |
| 75 | 24-08-2023 | 16-PSV-9974B | PSV | Flange | 6 | Inlet | 89.8 | 0.00261 |
| | 24-08-2023 | 16-PSV-9974B | PSV | Flange | 6 | Outlet | 60.6 | 0.00198 |
| 76 | 24-08-2023 | 16-PSV-9974A | PSV | Flange | 8 | Inlet | 146.8 | 0.00369 |
| | 24-08-2023 | 16-PSV-9974A | PSV | Flange | 8 | Outlet | 90.6 | 0.00263 |

# BHARAT PETROLEUM CORPORATION LIMITED, BINA-M.P.
## LDAR QUARTERLY REPORT FOR JULY 2023 TO SEPTEMBER 2023
### Monitoring - VOC Plant – HCU / DHDT

| S.No. | Date | Tag. No. | Equipment | Component | Line size (inch) | Location | Screening Value sv (ppm) | Estimated Emission Rate kg/day |
|---|---|---|---|---|---|---|---|---|
| COMPONENT - PSV | | | | | | | | |
| 77 | 24-08-2023 | 16-PSV-2401A | PSV | Flange | 10 | Inlet | 23.4 | 0.00102 |
| | 24-08-2023 | 16-PSV-2401A | PSV | Flange | 10 | Outlet | 10.5 | 0.00058 |
| 78 | 24-08-2023 | 16-PSV-2401B | PSV | Flange | 4 | Inlet | 23.6 | 0.00102 |
| | 24-08-2023 | 16-PSV-2401B | PSV | Flange | 4 | Outlet | 741.2 | 0.01152 |
| 79 | 24-08-2023 | 16-PSV-2201A | PSV | Flange | 6 | Inlet | 50.2 | 0.00174 |
| | 24-08-2023 | 16-PSV-2201A | PSV | Flange | 6 | Outlet | 56.4 | 0.00188 |
| 80 | 24-08-2023 | 16-PSV-2201B | PSV | Flange | 8 | Inlet | 13.2 | 0.00068 |
| | 24-08-2023 | 16-PSV-2201B | PSV | Flange | 8 | Outlet | 60.8 | 0.00199 |
| 81 | 24-08-2023 | 16-PSV-4301A | PSV | Flange | 8 | Inlet | 93.4 | 0.00269 |
| | 24-08-2023 | 16-PSV-4301A | PSV | Flange | 8 | Outlet | 13.5 | 0.00069 |
| 82 | 24-08-2023 | 16-PSV-4301B | PSV | Flange | 6 | Inlet | 62.4 | 0.00202 |
| | 24-08-2023 | 16-PSV-4301B | PSV | Flange | 6 | Outlet | 163.2 | 0.00398 |
| 83 | 24-08-2023 | 16-PSV-4301C | PSV | Flange | 4 | Inlet | 30.2 | 0.00121 |
| | 24-08-2023 | 16-PSV-4301C | PSV | Flange | 4 | Outlet | 80.4 | 0.00242 |
| 84 | 24-08-2023 | 16-PSV-4801A | PSV | Flange | 3 | Inlet | 70.6 | 0.00221 |
| | 24-08-2023 | 16-PSV-4801A | PSV | Flange | 3 | Outlet | 93.1 | 0.00268 |
| 85 | 24-08-2023 | 16-PSV-4801B | PSV | Flange | 4 | Inlet | 25.6 | 0.00108 |
| | 24-08-2023 | 16-PSV-4801B | PSV | Flange | 4 | Outlet | 165.5 | 0.00402 |
| 86 | 24-08-2023 | 16-PSV-7901A | PSV | Flange | 6 | Inlet | 846.1 | 0.01264 |
| | 24-08-2023 | 16-PSV-7901A | PSV | Flange | 6 | Outlet | 20.2 | 0.00092 |
| 87 | 24-08-2023 | 16-PSV-7901B | PSV | Flange | 4 | Inlet | 16.4 | 0.00079 |
| | 24-08-2023 | 16-PSV-7901B | PSV | Flange | 4 | Outlet | 79.1 | 0.00239 |
| 88 | 24-08-2023 | 16-PSV-9603A | PSV | Flange | 8 | Inlet | 23.4 | 0.00102 |
| | 24-08-2023 | 16-PSV-9603A | PSV | Flange | 8 | Outlet | 60.1 | 0.00197 |
| 89 | 24-08-2023 | 16-PSV-9603B | PSV | Flange | 6 | Inlet | 80.2 | 0.00241 |
| | 24-08-2023 | 16-PSV-9603B | PSV | Flange | 6 | Outlet | 63.4 | 0.00205 |
| 90 | 24-08-2023 | 16-PSV-4901A | PSV | Flange | 3 | Inlet | 156.2 | 0.00386 |
| | 24-08-2023 | 16-PSV-4901A | PSV | Flange | 3 | Outlet | 30.1 | 0.00121 |
| 91 | 24-08-2023 | 16-PSV-4901B | PSV | Flange | 4 | Inlet | 125.5 | 0.00331 |
| | 24-08-2023 | 16-PSV-4901B | PSV | Flange | 4 | Outlet | 93.4 | 0.00269 |
| 92 | 24-08-2023 | 16-PSV-3901A | PSV | Flange | 6 | Inlet | 13.8 | 0.00070 |
| | 24-08-2023 | 16-PSV-3901A | PSV | Flange | 6 | Outlet | 9.2 | 0.00053 |
| 93 | 24-08-2023 | 16-PSV-3901B | PSV | Flange | 8 | Inlet | 46.6 | 0.00165 |
| | 24-08-2023 | 16-PSV-3901B | PSV | Flange | 8 | Outlet | 198.8 | 0.00457 |
| 94 | 24-08-2023 | 16-PSV-8401A | PSV | Flange | 4 | Inlet | 71.5 | 0.00223 |
| | 24-08-2023 | 16-PSV-8401A | PSV | Flange | 4 | Outlet | 41.2 | 0.00151 |
| 95 | 24-08-2023 | 16-PSV-8401B | PSV | Flange | 6 | Inlet | 16.6 | 0.00080 |
| | 24-08-2023 | 16-PSV-8401B | PSV | Flange | 6 | Outlet | 71.5 | 0.00223 |
| 96 | 24-08-2023 | 16-PSV-5201C | PSV | Flange | 8 | Inlet | 23.6 | 0.00102 |
| | 24-08-2023 | 16-PSV-5201C | PSV | Flange | 8 | Outlet | 55.5 | 0.00186 |
| 97 | 24-08-2023 | 16-PSV-7401C | PSV | Flange | 2 | Inlet | 32.1 | 0.00127 |
| | 24-08-2023 | 16-PSV-7401C | PSV | Flange | 2 | Outlet | 60.2 | 0.00197 |
| 98 | 24-08-2023 | 16-PSV-7803A | PSV | Flange | 4 | Inlet | 26.5 | 0.00111 |
| | 24-08-2023 | 16-PSV-7803A | PSV | Flange | 4 | Outlet | 43.1 | 0.00156 |
| 99 | 24-08-2023 | 16-PSV-7803B | PSV | Flange | 6 | Inlet | 20.3 | 0.00092 |
| | 24-08-2023 | 16-PSV-7803B | PSV | Flange | 6 | Outlet | 66.3 | 0.00211 |
| 100 | 24-08-2023 | 16-PSV-8601C | PSV | Flange | 8 | Inlet | 3.1 | 0.00025 |
| | 24-08-2023 | 16-PSV-8601C | PSV | Flange | 8 | Outlet | 5.6 | 0.00037 |
| 101 | 24-08-2023 | 16-PSV-7101A | PSV | Flange | 3 | Inlet | 7.3 | 0.00045 |
| | 24-08-2023 | 16-PSV-7101A | PSV | Flange | 3 | Outlet | 2.6 | 0.00022 |

# BHARAT PETROLEUM CORPORATION LIMITED, BINA-M.P.
## LDAR QUARTERLY REPORT FOR JULY 2023 TO SEPTEMBER 2023
### Monitoring - VOC Plant – HCU / DHDT

| S.No. | Date | Tag. No. | Equipment | Component | Line size (inch) | Location | Screening Value sv (ppm) | Estimated Emission Rate kg/day |
|---|---|---|---|---|---|---|---|---|
| COMPONENT - PSV | | | | | | | | |
| 102 | 24-08-2023 | 16-PSV-7101B | PSV | Flange | 6 | Inlet | 90.1 | 0.00262 |
| | 24-08-2023 | 16-PSV-7101B | PSV | Flange | 6 | Outlet | 2.4 | 0.00020 |
| 103 | 24-08-2023 | 16-PSV-5871 | PSV | Flange | 4 | Inlet | 6.5 | 0.00041 |
| | 24-08-2023 | 16-PSV-5871 | PSV | Flange | 4 | Outlet | 2.3 | 0.00020 |
| 104 | 24-08-2023 | 16-PSV-6671 | PSV | Flange | 6 | Inlet | 9.4 | 0.00053 |
| | 24-08-2023 | 16-PSV-6671 | PSV | Flange | 6 | Outlet | 10.5 | 0.00058 |
| 105 | 24-08-2023 | 16-PSV-6672 | PSV | Flange | 8 | Inlet | 6.9 | 0.00043 |
| | 24-08-2023 | 16-PSV-6672 | PSV | Flange | 8 | Outlet | 83.4 | 0.00248 |
| 106 | 24-08-2023 | 16-PSV-9971 | PSV | Flange | 4 | Inlet | 70.1 | 0.00220 |
| | 24-08-2023 | 16-PSV-9971 | PSV | Flange | 4 | Outlet | 52.4 | 0.00179 |
| 107 | 24-08-2023 | 16-PSV-9973 | PSV | Flange | 6 | Inlet | 56.2 | 0.00188 |
| | 24-08-2023 | 16-PSV-9973 | PSV | Flange | 6 | Outlet | 93.4 | 0.00269 |
| 108 | 24-08-2023 | 16-PSV-8671 | PSV | Flange | 8 | Inlet | 50.1 | 0.00173 |
| | 24-08-2023 | 16-PSV-8671 | PSV | Flange | 8 | Outlet | 23.6 | 0.00102 |
| 109 | 24-08-2023 | 16-PSV-1271A | PSV | Flange | 3 | Inlet | 6.4 | 0.00041 |
| | 24-08-2023 | 16-PSV-1271A | PSV | Flange | 3 | Outlet | 80.6 | 0.00242 |
| 110 | 24-08-2023 | 16-PSV-1271B | PSV | Flange | 3 | Inlet | 3.1 | 0.00025 |
| | 24-08-2023 | 16-PSV-1271B | PSV | Flange | 3 | Outlet | 2.5 | 0.00021 |
| 111 | 24-08-2023 | 16-PSV-1401A | PSV | Flange | 2 | Inlet | 9.6 | 0.00054 |
| | 24-08-2023 | 16-PSV-1401A | PSV | Flange | 2 | Outlet | 35.4 | 0.00136 |
| 112 | 24-08-2023 | 16-PSV-1401B | PSV | Flange | 2 | Inlet | 13.5 | 0.00069 |
| | 24-08-2023 | 16-PSV-1401B | PSV | Flange | 2 | Outlet | 2.5 | 0.00021 |
| 113 | 24-08-2023 | 16-PSV-3401A | PSV | Flange | 4 | Inlet | 80.4 | 0.00242 |
| | 24-08-2023 | 16-PSV-3401A | PSV | Flange | 4 | Outlet | 5.6 | 0.00037 |
| 114 | 24-08-2023 | 16-PSV-3401B | PSV | Flange | 6 | Inlet | 23.1 | 0.00101 |
| | 24-08-2023 | 16-PSV-3401B | PSV | Flange | 6 | Outlet | 43.5 | 0.00157 |
| 115 | 24-08-2023 | 16-PSV-5202A | PSV | Flange | 8 | Inlet | 62.1 | 0.00202 |
| | 24-08-2023 | 16-PSV-5202A | PSV | Flange | 8 | Outlet | 156.4 | 0.00386 |
| 116 | 24-08-2023 | 16-PSV-5202B | PSV | Flange | 2 | Inlet | 93.7 | 0.00269 |
| | 24-08-2023 | 16-PSV-5202B | PSV | Flange | 2 | Outlet | 2.4 | 0.00020 |
| 117 | 24-08-2023 | 16-PSV-8201A | PSV | Flange | 4 | Inlet | 63.4 | 0.00205 |
| | 24-08-2023 | 16-PSV-8201A | PSV | Flange | 4 | Outlet | 12.8 | 0.00066 |
| 118 | 24-08-2023 | 16-PSV-8201B | PSV | Flange | 3 | Inlet | 93.4 | 0.00269 |
| | 24-08-2023 | 16-PSV-8201B | PSV | Flange | 3 | Outlet | 2.6 | 0.00022 |
| 119 | 24-08-2023 | 16-PSV-2003A | PSV | Flange | 4 | Inlet | 53.4 | 0.00181 |
| | 24-08-2023 | 16-PSV-2003A | PSV | Flange | 4 | Outlet | 123.3 | 0.00326 |
| 120 | 24-08-2023 | 16-PSV-2003B | PSV | Flange | 6 | Inlet | 60.4 | 0.00198 |
| | 24-08-2023 | 16-PSV-2003B | PSV | Flange | 6 | Outlet | 25.4 | 0.00108 |
| 121 | 24-08-2023 | 16-PSV-1001 | PSV | Flange | 4 | Inlet | 9.9 | 0.00055 |
| | 24-08-2023 | 16-PSV-1001 | PSV | Flange | 4 | Outlet | 8.7 | 0.00051 |
| 122 | 24-08-2023 | 16-PSV-1002 | PSV | Flange | 8 | Inlet | 46.8 | 0.00165 |
| | 24-08-2023 | 16-PSV-1002 | PSV | Flange | 8 | Outlet | 92.1 | 0.00266 |
| **Total VOC Emission from PSV** | | | | | | | | **0.47493** |

# BHARAT PETROLEUM CORPORATION LIMITED, BINA-M.P.
## LDAR QUARTERLY REPORT FOR JULY 2023 TO SEPTEMBER 2023
### Monitoring - VOC Plant – HCU / DHDT

| S.No. | Date | Tag. No. | Equipment | Component | Line size (inch) | Location | Screening Value sv (ppm) | Estimated Emission Rate kg/day |
|---|---|---|---|---|---|---|---|---|
| COMPONENT - EXCHANGER | | | | | | | | |
| 1 | 24-08-2023 | 16-EE-00 -106 | Exchanger | Flange | 8 | Inlet | 63.1 | 0.00204 |
| | 24-08-2023 | 16-EE-00 -106 | Exchanger | Flange | 6 | Outlet | 20.6 | 0.00093 |
| 2 | 24-08-2023 | 16-EE-00-107 | Exchanger | Flange | 10 | Inlet | 93.4 | 0.00269 |
| | 24-08-2023 | 16-EE-00-107 | Exchanger | Flange | 8 | Outlet | 56.8 | 0.00189 |
| 3 | 24-08-2023 | 16-EE-00-108 | Exchanger | Flange | 4 | Inlet | 9.3 | 0.00053 |
| | 24-08-2023 | 16-EE-00-108 | Exchanger | Flange | 2 | Outlet | 13.4 | 0.00069 |
| 4 | 24-08-2023 | 16-EE-00-105 A/B | Exchanger | Flange | 6 | Inlet | 50.9 | 0.00175 |
| | 24-08-2023 | 16-EE-00-105 A/B | Exchanger | Flange | 4 | Outlet | 86.4 | 0.00254 |
| 5 | 24-08-2023 | 16-EE-00-302 | Exchanger | Flange | 8 | Inlet | 156.7 | 0.00386 |
| | 24-08-2023 | 16-EE-00-302 | Exchanger | Flange | 6 | Outlet | 80.1 | 0.00241 |
| 6 | 24-08-2023 | 16-EE-00-109 | Exchanger | Flange | 6 | Inlet | 6.8 | 0.00043 |
| | 24-08-2023 | 16-EE-00-109 | Exchanger | Flange | 4 | Outlet | 93.1 | 0.00268 |
| 7 | 24-08-2023 | 16-EE-00-402 | Exchanger | Flange | 10 | Inlet | 26.4 | 0.00110 |
| | 24-08-2023 | 16-EE-00-402 | Exchanger | Flange | 8 | Outlet | 23.6 | 0.00102 |
| 8 | 24-08-2023 | 16-EE-00-305 | Exchanger | Flange | 6 | Inlet | 50.1 | 0.00173 |
| | 24-08-2023 | 16-EE-00-305 | Exchanger | Flange | 4 | Outlet | 23.6 | 0.00102 |
| 9 | 24-08-2023 | 16-EE-00-304 A/B | Exchanger | Flange | 12 | Inlet | 9.5 | 0.00054 |
| | 24-08-2023 | 16-EE-00-304 A/B | Exchanger | Flange | 10 | Outlet | 42.1 | 0.00153 |
| 10 | 24-08-2023 | 16-EE-00-610 A/B | Exchanger | Flange | 8 | Inlet | 6.4 | 0.00041 |
| | 24-08-2023 | 16-EE-00-610 A/B | Exchanger | Flange | 6 | Outlet | 3.8 | 0.00028 |
| 11 | 24-08-2023 | 16-EE-00-201 | Exchanger | Flange | 4 | Inlet | 70.4 | 0.00220 |
| | 24-08-2023 | 16-EE-00-201 | Exchanger | Flange | 3 | Outlet | 13.6 | 0.00069 |
| 12 | 24-08-2023 | 16-EE-00-202 A | Exchanger | Flange | 8 | Inlet | 53.2 | 0.00181 |
| | 24-08-2023 | 16-EE-00-202 A | Exchanger | Flange | 6 | Outlet | 89.1 | 0.00260 |
| 13 | 24-08-2023 | 16-EE-00-202 B | Exchanger | Flange | 10 | Inlet | 26.4 | 0.00110 |
| | 24-08-2023 | 16-EE-00-202 B | Exchanger | Flange | 8 | Outlet | 5.5 | 0.00037 |
| 14 | 24-08-2023 | 16-EE-00-406 | Exchanger | Flange | 10 | Inlet | 63.4 | 0.00205 |
| | 24-08-2023 | 16-EE-00-406 | Exchanger | Flange | 8 | Outlet | 183.4 | 0.00432 |
| 15 | 24-08-2023 | 16-EE-00-808 | Exchanger | Flange | 10 | Inlet | 20.9 | 0.00094 |
| | 24-08-2023 | 16-EE-00-808 | Exchanger | Flange | 8 | Outlet | 63.4 | 0.00205 |
| 16 | 24-08-2023 | 16-EE-00-806 A | Exchanger | Flange | 10 | Inlet | 80.1 | 0.00241 |
| | 24-08-2023 | 16-EE-00-806 A | Exchanger | Flange | 8 | Outlet | 26.8 | 0.00112 |
| 17 | 24-08-2023 | 16-EE-00-806 B | Exchanger | Flange | 8 | Inlet | 39.4 | 0.00146 |
| | 24-08-2023 | 16-EE-00-806 B | Exchanger | Flange | 6 | Outlet | 13.6 | 0.00069 |
| 18 | 24-08-2023 | 16-EE-00-806 C | Exchanger | Flange | 12 | Inlet | 53.2 | 0.00181 |
| | 24-08-2023 | 16-EE-00-806 C | Exchanger | Flange | 10 | Outlet | 742.5 | 0.01153 |
| 19 | 24-08-2023 | 16-EE-00-807 A | Exchanger | Flange | 8 | Inlet | 6.1 | 0.00039 |
| | 24-08-2023 | 16-EE-00-807 A | Exchanger | Flange | 6 | Outlet | 23.6 | 0.00102 |
| 20 | 24-08-2023 | 16-EE-00-807 B | Exchanger | Flange | 10 | Inlet | 89.3 | 0.00260 |
| | 24-08-2023 | 16-EE-00-807 B | Exchanger | Flange | 8 | Outlet | 10.6 | 0.00058 |
| 21 | 24-08-2023 | 16-EE-00-807 C | Exchanger | Flange | 6 | Inlet | 53.4 | 0.00181 |
| | 24-08-2023 | 16-EE-00-807 C | Exchanger | Flange | 4 | Outlet | 23.6 | 0.00102 |
| 22 | 24-08-2023 | 16-EE-00-405 | Exchanger | Flange | 8 | Inlet | 80.4 | 0.00242 |
| | 24-08-2023 | 16-EE-00-405 | Exchanger | Flange | 6 | Outlet | 13.6 | 0.00069 |
| 23 | 24-08-2023 | 16-EE-00-511 A/B | Exchanger | Flange | 10 | Inlet | 8.1 | 0.00048 |
| | 24-08-2023 | 16-EE-00-511 A/B | Exchanger | Flange | 8 | Outlet | 23.6 | 0.00102 |
| 24 | 24-08-2023 | 16-EE-00-505 | Exchanger | Flange | 6 | Inlet | 144.6 | 0.00365 |
| | 24-08-2023 | 16-EE-00-505 | Exchanger | Flange | 4 | Outlet | 36.5 | 0.00139 |
| 25 | 24-08-2023 | 16-EE-00-508 A/B | Exchanger | Flange | 8 | Inlet | 346.5 | 0.00675 |
| | 24-08-2023 | 16-EE-00-508 A/B | Exchanger | Flange | 6 | Outlet | 80.6 | 0.00242 |
| 26 | 24-08-2023 | 16-EE-00-708 A/B | Exchanger | Flange | 10 | Inlet | 23.9 | 0.00103 |
| | 24-08-2023 | 16-EE-00-708 A/B | Exchanger | Flange | 6 | Outlet | 6.6 | 0.00042 |

# BHARAT PETROLEUM CORPORATION LIMITED, BINA-M.P.
## LDAR QUARTERLY REPORT FOR JULY 2023 TO SEPTEMBER 2023
### Monitoring - VOC Plant – HCU / DHDT

| S.No. | Date | Tag. No. | Equipment | Component | Line size (inch) | Location | Screening Value sv (ppm) | Estimated Emission Rate kg/day |
|---|---|---|---|---|---|---|---|---|
| **COMPONENT - EXCHANGER** | | | | | | | | |
| 27 | 24-08-2023 | 16-EE-00-809 | Exchanger | Flange | 10 | Inlet | 83.4 | 0.00248 |
| | 24-08-2023 | 16-EE-00-809 | Exchanger | Flange | 8 | Outlet | 193.6 | 0.00448 |
| 28 | 24-08-2023 | 16-EE-00-101 | Exchanger | Flange | 10 | Inlet | 70.4 | 0.00220 |
| | 24-08-2023 | 16-EE-00-101 | Exchanger | Flange | 8 | Outlet | 13.5 | 0.00069 |
| 29 | 24-08-2023 | 16-EE-00-102 | Exchanger | Flange | 6 | Inlet | 26.6 | 0.00111 |
| | 24-08-2023 | 16-EE-00-102 | Exchanger | Flange | 4 | Outlet | 89.4 | 0.00260 |
| 30 | 24-08-2023 | 16-EE-00-103 | Exchanger | Flange | 12 | Inlet | 133.6 | 0.00345 |
| | 24-08-2023 | 16-EE-00-103 | Exchanger | Flange | 10 | Outlet | 6.7 | 0.00042 |
| 31 | 24-08-2023 | 16-EE-00-514 | Exchanger | Flange | 10 | Inlet | 9.4 | 0.00053 |
| | 24-08-2023 | 16-EE-00-514 | Exchanger | Flange | 8 | Outlet | 23.9 | 0.00103 |
| 32 | 24-08-2023 | 16-EE-00-512 | Exchanger | Flange | 8 | Inlet | 174.1 | 0.00416 |
| | 24-08-2023 | 16-EE-00-512 | Exchanger | Flange | 6 | Outlet | 23.9 | 0.00103 |
| 33 | 24-08-2023 | 16-EE-00-702 | Exchanger | Flange | 8 | Inlet | 93.1 | 0.00268 |
| | 24-08-2023 | 16-EE-00-702 | Exchanger | Flange | 6 | Outlet | 23.6 | 0.00102 |
| 34 | 24-08-2023 | 16-EE-00-603 | Exchanger | Flange | 10 | Inlet | 80.1 | 0.00241 |
| | 24-08-2023 | 16-EE-00-603 | Exchanger | Flange | 8 | Outlet | 2.6 | 0.00022 |
| 35 | 24-08-2023 | 16-EE-00-121 | Exchanger | Flange | 8 | Inlet | 80.3 | 0.00242 |
| | 24-08-2023 | 16-EE-00-121 | Exchanger | Flange | 6 | Outlet | 16.4 | 0.00079 |
| 36 | 24-08-2023 | 16-EE-00-609 A/B | Exchanger | Flange | 12 | Inlet | 513.2 | 0.00890 |
| | 24-08-2023 | 16-EE-00-609 A/B | Exchanger | Flange | 10 | Outlet | 5.6 | 0.00037 |
| 37 | 24-08-2023 | 16-EE-00-612 A | Exchanger | Flange | 10 | Inlet | 13.2 | 0.00068 |
| | 24-08-2023 | 16-EE-00-612 A | Exchanger | Flange | 8 | Outlet | 7.1 | 0.00044 |
| 38 | 24-08-2023 | 16-EE-00-612 B | Exchanger | Flange | 12 | Inlet | 46.2 | 0.00164 |
| | 24-08-2023 | 16-EE-00-612 B | Exchanger | Flange | 10 | Outlet | 30.9 | 0.00123 |
| 39 | 24-08-2023 | 16-EE-00-607 | Exchanger | Flange | 6 | Inlet | 86.4 | 0.00254 |
| | 24-08-2023 | 16-EE-00-607 | Exchanger | Flange | 4 | Outlet | 253.2 | 0.00541 |
| 40 | 24-08-2023 | 16-EE-00-704 | Exchanger | Flange | 12 | Inlet | 6.4 | 0.00041 |
| | 24-08-2023 | 16-EE-00-704 | Exchanger | Flange | 10 | Outlet | 133.2 | 0.00345 |
| 41 | 24-08-2023 | 16-EE-00-1101 | Exchanger | Flange | 8 | Inlet | 20.5 | 0.00092 |
| | 24-08-2023 | 16-EE-00-1101 | Exchanger | Flange | 6 | Outlet | 86.9 | 0.00255 |
| 42 | 24-08-2023 | 16-EE-00-1301 | Exchanger | Flange | 8 | Inlet | 71.5 | 0.00223 |
| | 24-08-2023 | 16-EE-00-1301 | Exchanger | Flange | 6 | Outlet | 23.6 | 0.00102 |
| 43 | 24-08-2023 | 16-EE-00-1502 | Exchanger | Flange | 10 | Inlet | 43.2 | 0.00156 |
| | 24-08-2023 | 16-EE-00-1502 | Exchanger | Flange | 8 | Outlet | 6.6 | 0.00042 |
| 44 | 24-08-2023 | 16-EE-00-1503 | Exchanger | Flange | 8 | Inlet | 32.1 | 0.00127 |
| | 24-08-2023 | 16-EE-00-1503 | Exchanger | Flange | 6 | Outlet | 56.4 | 0.00188 |
| **Total VOC Emission from Exchanger** | | | | | | | | **0.16559** |
| **COMPONENT-COMPRESSOR** | | | | | | | | |
| 1 | 24-08-2023 | 16-KA-RP-801 A | Compressor | Pump Seals | - | Compressor | 56.2 | 0.01410 |
| 2 | 24-08-2023 | 16-KA-RP-801 B | Compressor | Pump Seals | - | Compressor | 13.4 | 0.00588 |
| 3 | 24-08-2023 | 16-KA-RP-801 C | Compressor | Pump Seals | - | Compressor | 80.7 | 0.01758 |
| 4 | 24-08-2023 | 16-KA-RP-802 | Compressor | Pump Seals | - | Compressor | 9.6 | 0.00480 |
| **Total VOC Emission from Compressors** | | | | | | | | **0.04235** |

**Total VOC emission from HCU in Quarter July 2023 to September 2023 is 1.04094 kg/day**

# BHARAT PETROLEUM CORPORATION LIMITED, BINA-M.P.
## LDAR QUARTERLY REPORT FOR JULY 2023 TO SEPTEMBER 2023
### Monitoring - VOC Plant – CDU / VDU

| S.No. | Date | Tag. No. | Equipment | Component | Line size (inch) | Location | Screening Value sv (ppm) | Estimated Emission Rate kg/day |
|---|---|---|---|---|---|---|---|---|
| COMPONENT - VALVE | | | | | | | | |
| 1 | 16-08-2023 | 11-PA-CF-101 A | Pump Valve | Valve | 16 | Suc. Valve | 89.2 | 0.00157 |
| 2 | 16-08-2023 | 11-PA-CF-101 B | Pump Valve | Valve | 16 | Suc. Valve | 65.1 | 0.00124 |
| 3 | 16-08-2023 | 13-PA-CF-102 A | Pump Valve | Valve | 4 | Suc. Valve | 156.4 | 0.00238 |
| 4 | 16-08-2023 | 13-PA-CF-102 B | Pump Valve | Valve | 4 | Suc. Valve | 89.4 | 0.00157 |
| 5 | 16-08-2023 | 13-PA-CF-101 A | Pump Valve | Valve | 6 | Suc. Valve | 63.2 | 0.00121 |
| 6 | 16-08-2023 | 13-PA-CF-101 B | Pump Valve | Valve | 6 | Suc. Valve | 150.8 | 0.00232 |
| 7 | 16-08-2023 | 12-PA-CF-108-A | Pump Valve | Valve | 12 | Suc. Valve | 79.4 | 0.00144 |
| 8 | 16-08-2023 | 12-PA-CF-108-B | Pump Valve | Valve | 12 | Suc. Valve | 16.5 | 0.00044 |
| 9 | 16-08-2023 | 12-PA-CF-104-A | Pump Valve | Valve | 16 | Suc. Valve | 36.2 | 0.00080 |
| 10 | 16-08-2023 | 12-PA-CF-104-B | Pump Valve | Valve | 16 | Suc. Valve | 80.1 | 0.00145 |
| 11 | 16-08-2023 | 11-PA-CF-113 A | Pump Valve | Valve | 4 | Suc. Valve | 42.5 | 0.00090 |
| 12 | 16-08-2023 | 11-PA-CF-113 B | Pump Valve | Valve | 4 | Suc. Valve | 66.6 | 0.00126 |
| 13 | 16-08-2023 | 11-PA-CF-112 A | Pump Valve | Valve | 8 | Suc. Valve | 3.2 | 0.00013 |
| 14 | 16-08-2023 | 11-PA-CF-112 B | Pump Valve | Valve | 8 | Suc. Valve | 15.4 | 0.00042 |
| 15 | 16-08-2023 | 11-PA-CF-128 A | Pump Valve | Valve | 2 | Suc. Valve | 83.2 | 0.00149 |
| 16 | 16-08-2023 | 11-PA-CF-128 B | Pump Valve | Valve | 2 | Suc. Valve | 16.5 | 0.00044 |
| 17 | 16-08-2023 | 11-PA-CF-111 A | Pump Valve | Valve | 12 | Suc. Valve | 23.1 | 0.00057 |
| 18 | 16-08-2023 | 11-PA-CF-111 B | Pump Valve | Valve | 12 | Suc. Valve | 148.6 | 0.00229 |
| 19 | 16-08-2023 | 11-PA-CF-108 A | Pump Valve | Valve | 8 | Suc. Valve | 93.1 | 0.00162 |
| 20 | 16-08-2023 | 11-PA-CF-108 B | Pump Valve | Valve | 8 | Suc. Valve | 25.4 | 0.00061 |
| 21 | 16-08-2023 | 11-PA-CF-105 A | Pump Valve | Valve | 16 | Suc. Valve | 77.6 | 0.00141 |
| 22 | 16-08-2023 | 11-PA-CF-105 B | Pump Valve | Valve | 16 | Suc. Valve | 246.5 | 0.00334 |
| 23 | 16-08-2023 | 11-PA-CF-104 A | Pump Valve | Valve | 6 | Suc. Valve | 89.3 | 0.00157 |
| 24 | 16-08-2023 | 11-PA-CF-104 B | Pump Valve | Valve | 6 | Suc. Valve | 16.5 | 0.00044 |
| 25 | 16-08-2023 | 12-PA-CF-102 A | Pump Valve | Valve | 16 | Suc. Valve | 20.6 | 0.00053 |
| 26 | 16-08-2023 | 12-PA-CF-102 B | Pump Valve | Valve | 16 | Suc. Valve | 39.5 | 0.00085 |
| 27 | 16-08-2023 | 12-PA-CF-112 A | Pump Valve | Valve | 8 | Suc. Valve | 16.4 | 0.00044 |
| 28 | 16-08-2023 | 12-PA-CF-112 B | Pump Valve | Valve | 8 | Suc. Valve | 133.6 | 0.00212 |
| 29 | 16-08-2023 | 12-PA-CF-109 A | Pump Valve | Valve | 6 | Suc. Valve | 45.8 | 0.00095 |
| 30 | 16-08-2023 | 12-PA-CF-109 B | Pump Valve | Valve | 6 | Suc. Valve | 93.4 | 0.00162 |
| 31 | 16-08-2023 | 12-PA-CF-101 A | Pump Valve | Valve | 14 | Suc. Valve | 26.5 | 0.00063 |
| 32 | 16-08-2023 | 12-PA-CF-101 B | Pump Valve | Valve | 14 | Suc. Valve | 133.5 | 0.00212 |
| 33 | 16-08-2023 | 11-PA-CF-103 A | Pump Valve | Valve | 6 | Suc. Valve | 63.2 | 0.00121 |
| 34 | 16-08-2023 | 11-PA-CF-103 B | Pump Valve | Valve | 6 | Suc. Valve | 74.2 | 0.00137 |
| 35 | 16-08-2023 | 11-PA-CF-106 A | Pump Valve | Valve | 12 | Suc. Valve | 16.5 | 0.00044 |
| 36 | 16-08-2023 | 11-PA-CF-106 B | Pump Valve | Valve | 12 | Suc. Valve | 40.6 | 0.00087 |
| 37 | 16-08-2023 | 11-PA-CF-107 A | Pump Valve | Valve | 8 | Suc. Valve | 36.5 | 0.00080 |
| 38 | 16-08-2023 | 11-PA-CF-107 B | Pump Valve | Valve | 8 | Suc. Valve | 48.5 | 0.00099 |
| 39 | 16-08-2023 | 11-PA-CF-109 A | Pump Valve | Valve | 6 | Suc. Valve | 62.5 | 0.00120 |
| 40 | 16-08-2023 | 11-PA-CF-109 B | Pump Valve | Valve | 6 | Suc. Valve | 13.5 | 0.00038 |
| 41 | 16-08-2023 | 12-PA-CF-110 A | Pump Valve | Valve | 8 | Suc. Valve | 46.3 | 0.00096 |
| 42 | 16-08-2023 | 12-PA-CF-110 B | Pump Valve | Valve | 8 | Suc. Valve | 93.2 | 0.00162 |
| 43 | 16-08-2023 | 11-PA-CF-101 A | Pump Valve | Valve | 16 | Dis. Valve | 13.5 | 0.00038 |
| 44 | 16-08-2023 | 11-PA-CF-101 B | Pump Valve | Valve | 16 | Dis. Valve | 30.6 | 0.00071 |

# BHARAT PETROLEUM CORPORATION LIMITED, BINA-M.P.
## LDAR QUARTERLY REPORT FOR JULY 2023 TO SEPTEMBER 2023
### Monitoring - VOC Plant – CDU / VDU

| S.No. | Date | Tag. No. | Equipment | Component | Line size (inch) | Location | Screening Value sv (ppm) | Estimated Emission Rate kg/day |
|---|---|---|---|---|---|---|---|---|
| COMPONENT - VALVE | | | | | | | | |
| 45 | 16-08-2023 | 13-PA-CF-102 A | Pump Valve | Valve | 2 | Dis. Valve | 15.4 | 0.00042 |
| 46 | 16-08-2023 | 13-PA-CF-102 B | Pump Valve | Valve | 2 | Dis. Valve | 23.6 | 0.00058 |
| 47 | 16-08-2023 | 13-PA-CF-101 A | Pump Valve | Valve | 4 | Dis. Valve | 99.8 | 0.00170 |
| 48 | 16-08-2023 | 13-PA-CF-101 B | Pump Valve | Valve | 4 | Dis. Valve | 70.4 | 0.00131 |
| 49 | 16-08-2023 | 12-PA-CF-108-A | Pump Valve | Valve | 12 | Dis. Valve | 25.6 | 0.00062 |
| 50 | 16-08-2023 | 12-PA-CF-108-B | Pump Valve | Valve | 12 | Dis. Valve | 613.2 | 0.00660 |
| 51 | 16-08-2023 | 12-PA-CF-104-A | Pump Valve | Valve | 12 | Dis. Valve | 45.5 | 0.00095 |
| 52 | 16-08-2023 | 12-PA-CF-104-B | Pump Valve | Valve | 12 | Dis. Valve | 80.4 | 0.00145 |
| 53 | 16-08-2023 | 11-PA-CF-113 A | Pump Valve | Valve | 2 | Dis. Valve | 16.9 | 0.00045 |
| 54 | 16-08-2023 | 11-PA-CF-113 B | Pump Valve | Valve | 2 | Dis. Valve | 66.4 | 0.00126 |
| 55 | 16-08-2023 | 11-PA-CF-112 A | Pump Valve | Valve | 6 | Dis. Valve | 70.1 | 0.00131 |
| 56 | 16-08-2023 | 11-PA-CF-112 B | Pump Valve | Valve | 6 | Dis. Valve | 25.4 | 0.00061 |
| 57 | 16-08-2023 | 11-PA-CF-128 A | Pump Valve | Valve | 2 | Dis. Valve | 26.8 | 0.00064 |
| 58 | 16-08-2023 | 11-PA-CF-128 B | Pump Valve | Valve | 2 | Dis. Valve | 96.6 | 0.00166 |
| 59 | 16-08-2023 | 11-PA-CF-111 A | Pump Valve | Valve | 10 | Dis. Valve | 48.6 | 0.00100 |
| 60 | 16-08-2023 | 11-PA-CF-111 B | Pump Valve | Valve | 10 | Dis. Valve | 36.7 | 0.00081 |
| 61 | 16-08-2023 | 11-PA-CF-108 A | Pump Valve | Valve | 6 | Dis. Valve | 19.4 | 0.00050 |
| 62 | 16-08-2023 | 11-PA-CF-108 B | Pump Valve | Valve | 6 | Dis. Valve | 56.2 | 0.00111 |
| 63 | 16-08-2023 | 11-PA-CF-105 A | Pump Valve | Valve | 14 | Dis. Valve | 33.6 | 0.00076 |
| 64 | 16-08-2023 | 11-PA-CF-105 B | Pump Valve | Valve | 14 | Dis. Valve | 26.5 | 0.00063 |
| 65 | 16-08-2023 | 11-PA-CF-104 A | Pump Valve | Valve | 4 | Dis. Valve | 133.5 | 0.00212 |
| 66 | 16-08-2023 | 11-PA-CF-104 B | Pump Valve | Valve | 4 | Dis. Valve | 70.1 | 0.00131 |
| 67 | 16-08-2023 | 12-PA-CF-102 A | Pump Valve | Valve | 14 | Dis. Valve | 25.8 | 0.00062 |
| 68 | 16-08-2023 | 12-PA-CF-102 B | Pump Valve | Valve | 14 | Dis. Valve | 96.5 | 0.00166 |
| 69 | 16-08-2023 | 12-PA-CF-112 A | Pump Valve | Valve | 6 | Dis. Valve | 23.1 | 0.00057 |
| 70 | 16-08-2023 | 12-PA-CF-112 B | Pump Valve | Valve | 6 | Dis. Valve | 20.6 | 0.00053 |
| 71 | 16-08-2023 | 12-PA-CF-109 A | Pump Valve | Valve | 6 | Dis. Valve | 36.2 | 0.00080 |
| 72 | 16-08-2023 | 12-PA-CF-109 B | Pump Valve | Valve | 6 | Dis. Valve | 156.4 | 0.00238 |
| 73 | 16-08-2023 | 12-PA-CF-101 A | Pump Valve | Valve | 12 | Dis. Valve | 964.5 | 0.00925 |
| 74 | 16-08-2023 | 12-PA-CF-101 B | Pump Valve | Valve | 12 | Dis. Valve | 321.5 | 0.00408 |
| 75 | 16-08-2023 | 11-PA-CF-103 A | Pump Valve | Valve | 4 | Dis. Valve | 26.5 | 0.00063 |
| 76 | 16-08-2023 | 11-PA-CF-103 B | Pump Valve | Valve | 4 | Dis. Valve | 44.2 | 0.00093 |
| 77 | 16-08-2023 | 11-PA-CF-106 A | Pump Valve | Valve | 10 | Dis. Valve | 16.5 | 0.00044 |
| 78 | 16-08-2023 | 11-PA-CF-106 B | Pump Valve | Valve | 10 | Dis. Valve | 23.1 | 0.00057 |
| 79 | 16-08-2023 | 11-PA-CF-107 A | Pump Valve | Valve | 8 | Dis. Valve | 50.1 | 0.00102 |
| 80 | 16-08-2023 | 11-PA-CF-107 B | Pump Valve | Valve | 8 | Dis. Valve | 89.6 | 0.00157 |
| 81 | 16-08-2023 | 11-PA-CF-109 A | Pump Valve | Valve | 4 | Dis. Valve | 26.4 | 0.00063 |
| 82 | 16-08-2023 | 11-PA-CF-109 B | Pump Valve | Valve | 4 | Dis. Valve | 23.4 | 0.00058 |
| 83 | 16-08-2023 | 12-PA-CF-110 A | Pump Valve | Valve | 6 | Dis. Valve | 10.5 | 0.00032 |
| 84 | 16-08-2023 | 12-PA-CF-110 B | Pump Valve | Valve | 6 | Dis. Valve | 3.6 | 0.00014 |
| 85 | 16-08-2023 | 11-FV-1601 | Control Valve | Valve | 8 | Control Valve | 44.2 | 0.00093 |
| 86 | 16-08-2023 | 11-HV-1101 | Control Valve | Valve | 12 | Control Valve | 189.6 | 0.00275 |
| 87 | 16-08-2023 | 11-LV-1602 | Control Valve | Valve | 16 | Control Valve | 3.5 | 0.00014 |
| 88 | 16-08-2023 | 12-FV-1203 | Control Valve | Valve | 4 | Control Valve | 20.1 | 0.00052 |

# BHARAT PETROLEUM CORPORATION LIMITED, BINA-M.P.
## LDAR QUARTERLY REPORT FOR JULY 2023 TO SEPTEMBER 2023
### Monitoring - VOC Plant – CDU / VDU

| S.No. | Date | Tag. No. | Equipment | Component | Line size (inch) | Location | Screening Value sv (ppm) | Estimated Emission Rate kg/day |
|---|---|---|---|---|---|---|---|---|
| COMPONENT - VALVE | | | | | | | | |
| 89 | 16-08-2023 | 12-FV-1205 | Control Valve | Valve | 3 | Control Valve | 13.4 | 0.00038 |
| 90 | 16-08-2023 | 22-PV-1201 B | Control Valve | Valve | 6 | Control Valve | 76.3 | 0.00139 |
| 91 | 16-08-2023 | 22-PV-1201 A | Control Valve | Valve | 2 | Control Valve | 20.6 | 0.00053 |
| 92 | 16-08-2023 | 22-TV-1106 | Control Valve | Valve | 8 | Control Valve | 23.4 | 0.00058 |
| 93 | 16-08-2023 | 11-FV-1303 | Control Valve | Valve | 12 | Control Valve | 80.1 | 0.00145 |
| 94 | 16-08-2023 | 22-FV-1101 | Control Valve | Valve | 8 | Control Valve | 23.6 | 0.00058 |
| 95 | 16-08-2023 | 11-HV-1301 | Control Valve | Valve | 12 | Control Valve | 166.5 | 0.00250 |
| 96 | 16-08-2023 | 12-PV-1501 | Control Valve | Valve | 4 | Control Valve | 23.4 | 0.00058 |
| 97 | 16-08-2023 | 12-FV-1204 | Control Valve | Valve | 4 | Control Valve | 89.4 | 0.00157 |
| 98 | 16-08-2023 | 12-PV-1503 | Control Valve | Valve | 6 | Control Valve | 70.6 | 0.00132 |
| 99 | 16-08-2023 | 12-FV-1504 | Control Valve | Valve | 8 | Control Valve | 36.2 | 0.00080 |
| 100 | 16-08-2023 | 11-LV-1601 | Control Valve | Valve | 8 | Control Valve | 78.5 | 0.00142 |
| 101 | 16-08-2023 | 11-LV-1603 | Control Valve | Valve | 2 | Control Valve | 16.5 | 0.00044 |
| 102 | 16-08-2023 | 12-PV-1155 | Control Valve | Valve | 2 | Control Valve | 4.6 | 0.00017 |
| 103 | 16-08-2023 | 13-PV-1201 | Control Valve | Valve | 2 | Control Valve | 123.6 | 0.00200 |
| 104 | 16-08-2023 | 22-PV-1101 | Control Valve | Valve | 4 | Control Valve | 93.4 | 0.00162 |
| 105 | 16-08-2023 | 11-PV-4104 | Control Valve | Valve | 2 | Control Valve | 25.1 | 0.00061 |
| 106 | 16-08-2023 | 11-LV-4101 | Control Valve | Valve | 2 | Control Valve | 46.2 | 0.00096 |
| 107 | 16-08-2023 | 11-UV-4101 | Control Valve | Valve | 2 | Control Valve | 13.8 | 0.00039 |
| 108 | 16-08-2023 | 11-LV-4104 | Control Valve | Valve | 2 | Control Valve | 69.5 | 0.00130 |
| 109 | 16-08-2023 | 11-UV-4102 | Control Valve | Valve | 2 | Control Valve | 13.4 | 0.00038 |
| 110 | 16-08-2023 | 21-FV-1102 | Control Valve | Valve | 2 | Control Valve | 25.6 | 0.00062 |
| 111 | 16-08-2023 | 21-FV-1101 | Control Valve | Valve | 6 | Control Valve | 89.4 | 0.00157 |
| 112 | 16-08-2023 | 22-PV-1202 | Control Valve | Valve | 6 | Control Valve | 13.5 | 0.00038 |
| 113 | 16-08-2023 | 22-PV-12012 | Control Valve | Valve | 6 | Control Valve | 23.6 | 0.00058 |
| 114 | 16-08-2023 | 22-LV-1206 | Control Valve | Valve | 2 | Control Valve | 123.5 | 0.00200 |
| 115 | 16-08-2023 | 22-LV-1201 | Control Valve | Valve | 2 | Control Valve | 63.4 | 0.00121 |
| 116 | 16-08-2023 | 33-PDV-1102 | Control Valve | Valve | 4 | Control Valve | 20.5 | 0.00052 |
| 117 | 16-08-2023 | 33-PDV-1202 | Control Valve | Valve | 4 | Control Valve | 89.6 | 0.00157 |
| 118 | 16-08-2023 | 22-LV-1104 | Control Valve | Valve | 2 | Control Valve | 43.1 | 0.00091 |
| 119 | 16-08-2023 | 22-LV-1102 | Control Valve | Valve | 10 | Control Valve | 80.1 | 0.00145 |
| 120 | 16-08-2023 | 21-UV-1102 | Control Valve | Valve | 6 | Control Valve | 25.9 | 0.00062 |
| 121 | 16-08-2023 | 21-LV-1101 | Control Valve | Valve | 6 | Control Valve | 77.5 | 0.00141 |
| 122 | 16-08-2023 | 21-UV-1101 | Control Valve | Valve | 2 | Control Valve | 26.1 | 0.00063 |
| 123 | 16-08-2023 | 22-LV-1102 | Control Valve | Valve | 2 | Control Valve | 36.1 | 0.00080 |
| 124 | 16-08-2023 | 22-TV-1109 | Control Valve | Valve | 6 | Control Valve | 20.3 | 0.00052 |
| 125 | 16-08-2023 | 12-PV-1601 | Control Valve | Valve | 8 | Control Valve | 96.5 | 0.00166 |
| 126 | 16-08-2023 | 13-PDV-1301 | Control Valve | Valve | 10 | Control Valve | 348.9 | 0.00433 |
| 127 | 16-08-2023 | 21-FV-2602 | Control Valve | Valve | 4 | Control Valve | 63.6 | 0.00122 |
| 128 | 16-08-2023 | 21-UV-2101 | Control Valve | Valve | 8 | Control Valve | 3.1 | 0.00013 |
| 129 | 16-08-2023 | 21-LV-2201 | Control Valve | Valve | 6 | Control Valve | 25.6 | 0.00062 |
| 130 | 16-08-2023 | 21-UV-2201 | Control Valve | Valve | 4 | Control Valve | 40.6 | 0.00087 |
| 131 | 16-08-2023 | 21-TV-2401 | Control Valve | Valve | 4 | Control Valve | 23.1 | 0.00057 |
| 132 | 16-08-2023 | 21-LV-2301 | Control Valve | Valve | 4 | Control Valve | 148.6 | 0.00229 |

# BHARAT PETROLEUM CORPORATION LIMITED, BINA-M.P.
## LDAR QUARTERLY REPORT FOR JULY 2023 TO SEPTEMBER 2023
### Monitoring - VOC Plant – CDU / VDU

| S.No. | Date | Tag. No. | Equipment | Component | Line size (inch) | Location | Screening Value sv (ppm) | Estimated Emission Rate kg/day |
|---|---|---|---|---|---|---|---|---|
| COMPONENT - VALVE | | | | | | | | |
| 133 | 16-08-2023 | 21-FV-2401 | Control Valve | Valve | 4 | Control Valve | 36.5 | 0.00080 |
| 134 | 16-08-2023 | 21-PV-2601 | Control Valve | Valve | 2 | Control Valve | 23.6 | 0.00058 |
| 135 | 16-08-2023 | 21-PDV-2501 | Control Valve | Valve | 2 | Control Valve | 93.4 | 0.00162 |
| 136 | 16-08-2023 | 24-PV-2103 | Control Valve | Valve | 2 | Control Valve | 25.3 | 0.00061 |
| 137 | 16-08-2023 | 21-LV-2501 | Control Valve | Valve | 4 | Control Valve | 25.2 | 0.00061 |
| 138 | 16-08-2023 | 24 FV 1502 | Control Valve | Valve | 4 | Control Valve | 69.3 | 0.00130 |
| 139 | 16-08-2023 | 24-LV-1601 | Control Valve | Valve | 4 | Control Valve | 163.5 | 0.00246 |
| 140 | 16-08-2023 | 24-LV-1501 | Control Valve | Valve | 3 | Control Valve | 40.6 | 0.00087 |
| 141 | 16-08-2023 | 24-UV-1501 | Control Valve | Valve | 8 | Control Valve | 35.2 | 0.00078 |
| 142 | 16-08-2023 | 24-PDV-1601 | Control Valve | Valve | 10 | Control Valve | 9.4 | 0.00029 |
| 143 | 16-08-2023 | 24-LV-1901 | Control Valve | Valve | 4 | Control Valve | 13.5 | 0.00038 |
| 144 | 16-08-2023 | 24-FV-1504 | Control Valve | Valve | 2 | Control Valve | 26.7 | 0.00064 |
| 145 | 16-08-2023 | 24-UV-1601 | Control Valve | Valve | 2 | Control Valve | 70.4 | 0.00131 |
| 146 | 16-08-2023 | 24-FV-1601 | Control Valve | Valve | 6 | Control Valve | 18.9 | 0.00049 |
| 147 | 16-08-2023 | 21-FV-2501 | Control Valve | Valve | 6 | Control Valve | 996.6 | 0.00948 |
| 148 | 16-08-2023 | 11-LV-4107 | Control Valve | Valve | 4 | Control Valve | 80.2 | 0.00145 |
| 149 | 16-08-2023 | 11-UV-4103 | Control Valve | Valve | 4 | Control Valve | 369.1 | 0.00452 |
| 150 | 16-08-2023 | 11-FV-2007 | Control Valve | Valve | 6 | Control Valve | 635.2 | 0.00678 |
| 151 | 16-08-2023 | 11-PV-2003 | Control Valve | Valve | 8 | Control Valve | 80.1 | 0.00145 |
| 152 | 16-08-2023 | 11-PV-1201 | Control Valve | Valve | 16 | Control Valve | 26.5 | 0.00063 |
| 153 | 16-08-2023 | 13-FV-1301 | Control Valve | Valve | 8 | Control Valve | 3.5 | 0.00014 |
| 154 | 16-08-2023 | 11-PV-2001 | Control Valve | Valve | 3 | Control Valve | 16.3 | 0.00044 |
| 155 | 16-08-2023 | 13-FV-1302 | Control Valve | Valve | 4 | Control Valve | 40.3 | 0.00087 |
| 156 | 16-08-2023 | 11-PV-2002 | Control Valve | Valve | 6 | Control Valve | 26.9 | 0.00064 |
| 157 | 16-08-2023 | 11-TV-1107 | Control Valve | Valve | 12 | Control Valve | 80.6 | 0.00145 |
| 158 | 16-08-2023 | 11-FV-1702 | Control Valve | Valve | 8 | Control Valve | 36.2 | 0.00080 |
| 159 | 16-08-2023 | 11-FV-1701 | Control Valve | Valve | 12 | Control Valve | 80.1 | 0.00145 |
| 160 | 16-08-2023 | 11-UV-2001 | Control Valve | Valve | 12 | Control Valve | 25.4 | 0.00061 |
| 161 | 16-08-2023 | 11-PV-4110 | Control Valve | Valve | 2 | Control Valve | 26.3 | 0.00063 |
| 162 | 16-08-2023 | 13-FV-1303 | Control Valve | Valve | 12 | Control Valve | 11.2 | 0.00033 |
| 163 | 16-08-2023 | 13-FV-1202 | Control Valve | Valve | 8 | Control Valve | 40.5 | 0.00087 |
| 164 | 16-08-2023 | 11-FV-1202 | Control Valve | Valve | 6 | Control Valve | 23.6 | 0.00058 |
| 165 | 16-08-2023 | 11-LV-1201 B | Control Valve | Valve | 4 | Control Valve | 93.4 | 0.00162 |
| 166 | 16-08-2023 | 11-LV-1201 A | Control Valve | Valve | 4 | Control Valve | 20.1 | 0.00052 |
| 167 | 16-08-2023 | 13-FV-1102 | Control Valve | Valve | 4 | Control Valve | 189.5 | 0.00275 |
| 168 | 16-08-2023 | 11-FV-1201 N | Control Valve | Valve | 2 | Control Valve | 63.4 | 0.00121 |
| 169 | 16-08-2023 | 12-FV-1302 | Control Valve | Valve | 2 | Control Valve | 40.2 | 0.00086 |
| 170 | 16-08-2023 | 11-FV-1504 | Control Valve | Valve | 6 | Control Valve | 56.1 | 0.00111 |
| 171 | 16-08-2023 | 12-FV-1502 | Control Valve | Valve | 6 | Control Valve | 3.6 | 0.00014 |
| 172 | 16-08-2023 | 11-FV-1503 | Control Valve | Valve | 14 | Control Valve | 12.1 | 0.00035 |
| 173 | 16-08-2023 | 11-FV-1802 | Control Valve | Valve | 2 | Control Valve | 20.6 | 0.00053 |
| 174 | 16-08-2023 | 11-UV-1802 | Control Valve | Valve | 3 | Control Valve | 93.4 | 0.00162 |
| 175 | 16-08-2023 | 11-FV-1804 | Control Valve | Valve | 6 | Control Valve | 89.3 | 0.00157 |
| 176 | 16-08-2023 | 11-FV-1703 | Control Valve | Valve | 6 | Control Valve | 26.5 | 0.00063 |
| 177 | 16-08-2023 | 11-FV-1508 | Control Valve | Valve | 6 | Control Valve | 122.4 | 0.00198 |

# BHARAT PETROLEUM CORPORATION LIMITED, BINA-M.P.
## LDAR QUARTERLY REPORT FOR JULY 2023 TO SEPTEMBER 2023
### Monitoring - VOC Plant – CDU / VDU

| S.No. | Date | Tag. No. | Equipment | Component | Line size (inch) | Location | Screening Value sv (ppm) | Estimated Emission Rate kg/day |
|---|---|---|---|---|---|---|---|---|
| COMPONENT - VALVE | | | | | | | | |
| 178 | 16-08-2023 | 11-UV-1454 | Control Valve | Valve | 4 | Control Valve | 23.6 | 0.00058 |
| 179 | 16-08-2023 | 11-UV-1456 | Control Valve | Valve | 4 | Control Valve | 80.4 | 0.00145 |
| 180 | 16-08-2023 | 11-UV-1451 | Control Valve | Valve | 4 | Control Valve | 13.6 | 0.00039 |
| 181 | 16-08-2023 | 11-PV-5801 | Control Valve | Valve | 4 | Control Valve | 63.2 | 0.00121 |
| 182 | 16-08-2023 | 11-FV-1604 | Control Valve | Valve | 2 | Control Valve | 20.9 | 0.00053 |
| 183 | 16-08-2023 | 11-FV-1604 | Control Valve | Valve | 6 | Control Valve | 66.8 | 0.00126 |
| 184 | 16-08-2023 | 11-FV-1403 | Control Valve | Valve | 8 | Control Valve | 48.6 | 0.00100 |
| 185 | 16-08-2023 | 11-FV-1404 | Control Valve | Valve | 4 | Control Valve | 93.2 | 0.00162 |
| 186 | 16-08-2023 | 11-FV-1402 | Control Valve | Valve | 4 | Control Valve | 10.4 | 0.00032 |
| 187 | 16-08-2023 | 11-FV-1401 | Control Valve | Valve | 6 | Control Valve | 23.6 | 0.00058 |
| 188 | 16-08-2023 | 11-PV-1454 | Control Valve | Valve | 6 | Control Valve | 93.4 | 0.00162 |
| 189 | 16-08-2023 | 11-PV-1455 | Control Valve | Valve | 2 | Control Valve | 80.2 | 0.00145 |
| 190 | 16-08-2023 | 11-FV-1406 | Control Valve | Valve | 6 | Control Valve | 63.7 | 0.00122 |
| 191 | 16-08-2023 | 21-UV-5751 | Control Valve | Valve | 4 | Control Valve | 99.8 | 0.00170 |
| 192 | 16-08-2023 | 21-GN-00-1001 A | Control Valve | Valve | 4 | Inlet Control Valve | 143.9 | 0.00224 |
| 193 | 16-08-2023 | 21-GN-00-1001 A | Control Valve | Valve | 3 | Outlet Control Valve | 80.1 | 0.00145 |
| 194 | 16-08-2023 | 21-GN-00-1001 B | Control Valve | Valve | 4 | Inlet Control Valve | 23.6 | 0.00058 |
| 195 | 16-08-2023 | 21-GN-00-1001 B | Control Valve | Valve | 3 | Outlet Control Valve | 7.3 | 0.00024 |
| 196 | 16-08-2023 | 21-GN-00-1002 A | Control Valve | Valve | 4 | Inlet Control Valve | 6.2 | 0.00021 |
| 197 | 16-08-2023 | 21-GN-00-1002 A | Control Valve | Valve | 3 | Outlet Control Valve | 15.2 | 0.00042 |
| 198 | 16-08-2023 | 21-GN-00-1002 B | Control Valve | Valve | 4 | Inlet Control Valve | 93.8 | 0.00163 |
| 199 | 16-08-2023 | 21-GN-00-1002 B | Control Valve | Valve | 3 | Outlet Control Valve | 87.4 | 0.00154 |
| 200 | 16-08-2023 | 21-GN-00-1003 A | Control Valve | Valve | 4 | Inlet Control Valve | 6.5 | 0.00022 |
| 201 | 16-08-2023 | 21-GN-00-1003 A | Control Valve | Valve | 3 | Outlet Control Valve | 23.1 | 0.00057 |
| 202 | 16-08-2023 | 21-GN-00-1003 B | Control Valve | Valve | 4 | Inlet Control Valve | 189.6 | 0.00275 |
| 203 | 16-08-2023 | 21-GN-00-1003 B | Control Valve | Valve | 3 | Outlet Control Valve | 36.4 | 0.00080 |
| 204 | 16-08-2023 | 21-GN-00-1004 A | Control Valve | Valve | 4 | Inlet Control Valve | 80.3 | 0.00145 |
| 205 | 16-08-2023 | 21-GN-00-1004 A | Control Valve | Valve | 3 | Outlet Control Valve | 26.7 | 0.00064 |
| 206 | 16-08-2023 | 21-GN-00-1004 B | Control Valve | Valve | 4 | Inlet Control Valve | 14.5 | 0.00040 |
| 207 | 16-08-2023 | 21-GN-00-1004 B | Control Valve | Valve | 3 | Outlet Control Valve | 282.6 | 0.00370 |
| 208 | 16-08-2023 | 21-GN-00-1005 A | Control Valve | Valve | 4 | Inlet Control Valve | 9.6 | 0.00030 |
| 209 | 16-08-2023 | 21-GN-00-1005 A | Control Valve | Valve | 3 | Outlet Control Valve | 35.1 | 0.00078 |
| 210 | 16-08-2023 | 21-GN-00-1005 B | Control Valve | Valve | 4 | Inlet Control Valve | 13.2 | 0.00038 |
| 211 | 16-08-2023 | 21-GN-00-1005 B | Control Valve | Valve | 3 | Outlet Control Valve | 56.4 | 0.00111 |
| 212 | 16-08-2023 | 21-CC-00-1001 | Control Valve | Valve | 4 | Inlet Control Valve | 30.6 | 0.00071 |
| 213 | 16-08-2023 | 21-CC-00-1001 | Control Valve | Valve | 3 | Outlet Control Valve | 43.1 | 0.00091 |
| 214 | 16-08-2023 | 21-CC-00-1002 | Control Valve | Valve | 4 | Inlet Control Valve | 20.5 | 0.00052 |
| 215 | 16-08-2023 | 21-CC-00-1002 | Control Valve | Valve | 3 | Outlet Control Valve | 80.1 | 0.00145 |
| 216 | 16-08-2023 | 21-RB-00-1001 | Control Valve | Valve | 4 | Inlet Control Valve | 23.6 | 0.00058 |
| 217 | 16-08-2023 | 21-RB-00-1001 | Control Valve | Valve | 3 | Outlet Control Valve | 43.1 | 0.00091 |
| 218 | 16-08-2023 | 21-RB-00-1002 | Control Valve | Valve | 4 | Inlet Control Valve | 20.5 | 0.00052 |
| 219 | 16-08-2023 | 21-RB-00-1002 | Control Valve | Valve | 3 | Outlet Control Valve | 89.4 | 0.00157 |
| 220 | 16-08-2023 | 21-RB-00-1003 | Control Valve | Valve | 4 | Inlet Control Valve | 3.6 | 0.00014 |
| 221 | 16-08-2023 | 21-RB-00-1003 | Control Valve | Valve | 3 | Outlet Control Valve | 20.1 | 0.00052 |
| 222 | 16-08-2023 | 21-VV-HW-1001 | Control Valve | Valve | 4 | Inlet Control Valve | 466.5 | 0.00538 |

# BHARAT PETROLEUM CORPORATION LIMITED, BINA-M.P.
## LDAR QUARTERLY REPORT FOR JULY 2023 TO SEPTEMBER 2023
### Monitoring - VOC Plant – CDU / VDU

| S.No. | Date | Tag. No. | Equipment | Component | Line size (inch) | Location | Screening Value sv (ppm) | Estimated Emission Rate kg/day |
|---|---|---|---|---|---|---|---|---|
| COMPONENT - VALVE | | | | | | | | |
| 223 | 16-08-2023 | 21-VV-HW-1001 | Control Valve | Valve | 3 | Outlet Control Valve | 39.2 | 0.00085 |
| 224 | 16-08-2023 | 21-VV-HI-1003 | Control Valve | Valve | 4 | Inlet Control Valve | 13.7 | 0.00039 |
| 225 | 16-08-2023 | 21-VV-HI-1003 | Control Valve | Valve | 3 | Outlet Control Valve | 89.4 | 0.00157 |
| 226 | 16-08-2023 | 21-VV-VI-1004 | Control Valve | Valve | 4 | Inlet Control Valve | 26.3 | 0.00063 |
| 227 | 16-08-2023 | 21-VV-VI-1004 | Control Valve | Valve | 3 | Outlet Control Valve | 30.1 | 0.00070 |
| 228 | 16-08-2023 | 21-VV-HW-1005 | Control Valve | Valve | 4 | Inlet Control Valve | 8.2 | 0.00026 |
| 229 | 16-08-2023 | 21-VV-HW-1005 | Control Valve | Valve | 3 | Outlet Control Valve | 6.4 | 0.00022 |
| 230 | 16-08-2023 | 21-VV-VW-1006 | Control Valve | Valve | 4 | Inlet Control Valve | 9.3 | 0.00029 |
| 231 | 16-08-2023 | 21-VV-VW-1006 | Control Valve | Valve | 3 | Outlet Control Valve | 136.5 | 0.00215 |
| 232 | 16-08-2023 | 21-VV-VI-1007 | Control Valve | Valve | 4 | Inlet Control Valve | 6.4 | 0.00022 |
| 233 | 16-08-2023 | 21-VV-VI-1007 | Control Valve | Valve | 3 | Outlet Control Valve | 80.9 | 0.00146 |
| 234 | 16-08-2023 | 21-VV-HI-1002 | Control Valve | Valve | 4 | Inlet Control Valve | 65.4 | 0.00124 |
| 235 | 16-08-2023 | 21-VV-HI-1002 | Control Valve | Valve | 3 | Outlet Control Valve | 543.1 | 0.00603 |
| 236 | 16-08-2023 | 12LZ001002 A | Control Valve | Valve | 4 | Control Valve | 23.6 | 0.00058 |
| 237 | 16-08-2023 | 12LZ001002 B | Control Valve | Valve | 3 | Control Valve | 631.2 | 0.00674 |
| 238 | 16-08-2023 | 12LZ001002 C | Control Valve | Valve | 4 | Control Valve | 50.2 | 0.00102 |
| 239 | 16-08-2023 | 11-PA-CF-1001 A | Pump Valve | Valve | 6 | Suc. Valve | 80.6 | 0.00145 |
| 240 | 16-08-2023 | 11-PA-CF-1001 B | Pump Valve | Valve | 6 | Suc. Valve | 13.4 | 0.00038 |
| 241 | 16-08-2023 | 12-PA-CF-113 C | Pump Valve | Valve | 8 | Suc. Valve | 80.4 | 0.00145 |
| 242 | 16-08-2023 | 12-PA-CF-1002 A | Pump Valve | Valve | 10 | Suc. Valve | 93.2 | 0.00162 |
| 243 | 16-08-2023 | 12-PA-CF-1002 B | Pump Valve | Valve | 10 | Suc. Valve | 13.4 | 0.00038 |
| 244 | 16-08-2023 | 11-PA-CF-1002 A | Pump Valve | Valve | 10 | Suc. Valve | 56.4 | 0.00111 |
| 245 | 16-08-2023 | 11-PA-CF-1002 B | Pump Valve | Valve | 10 | Suc. Valve | 89.6 | 0.00157 |
| 246 | 16-08-2023 | 11-PA-CF-1002 C | Pump Valve | Valve | 10 | Suc. Valve | 3.4 | 0.00014 |
| 247 | 16-08-2023 | 21-PA-CF-1001 A | Pump Valve | Valve | 2 | Suc. Valve | 25.6 | 0.00062 |
| 248 | 16-08-2023 | 21-PA-CF-1001 B | Pump Valve | Valve | 2 | Suc. Valve | 144.2 | 0.00224 |
| 249 | 16-08-2023 | 21-PA-CF-1003 A | Pump Valve | Valve | 3 | Suc. Valve | 6.3 | 0.00022 |
| 250 | 16-08-2023 | 21-PA-CF-1003 B | Pump Valve | Valve | 3 | Suc. Valve | 25.4 | 0.00061 |
| 251 | 16-08-2023 | 21-PA-CF-1002 A | Pump Valve | Valve | 2 | Suc. Valve | 89.6 | 0.00157 |
| 252 | 16-08-2023 | 21-PA-CF-1002 B | Pump Valve | Valve | 2 | Suc. Valve | 54.1 | 0.00108 |
| 253 | 16-08-2023 | 24-PA-MT-1001 A | Pump Valve | Valve | 2 | Suc. Valve | 20.1 | 0.00052 |
| 254 | 16-08-2023 | 24-PA-MT-1001-B | Pump Valve | Valve | 2 | Suc. Valve | 63.2 | 0.00121 |
| 255 | 16-08-2023 | 11-PA-CF-1001 A | Pump Valve | Valve | 4 | Dis. Valve | 144.9 | 0.00225 |
| 256 | 16-08-2023 | 11-PA-CF-1001 B | Pump Valve | Valve | 4 | Dis. Valve | 68.5 | 0.00129 |
| 257 | 16-08-2023 | 12-PA-CF-113 C | Pump Valve | Valve | 6 | Dis. Valve | 36.7 | 0.00081 |
| 258 | 16-08-2023 | 12-PA-CF-1002 A | Pump Valve | Valve | 8 | Dis. Valve | 84.1 | 0.00150 |
| 259 | 16-08-2023 | 12-PA-CF-1002 B | Pump Valve | Valve | 8 | Dis. Valve | 26.9 | 0.00064 |
| 260 | 16-08-2023 | 11-PA-CF-1002 A | Pump Valve | Valve | 8 | Dis. Valve | 52.1 | 0.00105 |
| 261 | 16-08-2023 | 11-PA-CF-1002 B | Pump Valve | Valve | 8 | Dis. Valve | 30.7 | 0.00071 |
| 262 | 16-08-2023 | 11-PA-CF-1002 C | Pump Valve | Valve | 2 | Dis. Valve | 56.3 | 0.00111 |
| 263 | 16-08-2023 | 21-PA-CF-1001 A | Pump Valve | Valve | 2 | Dis. Valve | 58.4 | 0.00114 |
| 264 | 16-08-2023 | 21-PA-CF-1001 B | Pump Valve | Valve | 2 | Dis. Valve | 913.2 | 0.00888 |
| 265 | 16-08-2023 | 21-PA-CF-1003 A | Pump Valve | Valve | 2 | Dis. Valve | 88.4 | 0.00156 |
| 266 | 16-08-2023 | 21-PA-CF-1003 B | Pump Valve | Valve | 2 | Dis. Valve | 56.1 | 0.00111 |
| 267 | 16-08-2023 | 21-PA-CF-1002 A | Pump Valve | Valve | 2 | Dis. Valve | 42.3 | 0.00090 |
| 268 | 16-08-2023 | 21-PA-CF-1002 B | Pump Valve | Valve | 2 | Dis. Valve | 9.3 | 0.00029 |

# BHARAT PETROLEUM CORPORATION LIMITED, BINA-M.P.
## LDAR QUARTERLY REPORT FOR JULY 2023 TO SEPTEMBER 2023
### Monitoring - VOC Plant – CDU / VDU

| S.No. | Date | Tag. No. | Equipment | Component | Line size (inch) | Location | Screening Value sv (ppm) | Estimated Emission Rate kg/day |
|---|---|---|---|---|---|---|---|---|
| COMPONENT - VALVE | | | | | | | | |
| 269 | 16-08-2023 | 24-PA-MT-1001 A | Pump Valve | Valve | 2 | Dis. Valve | 64.8 | 0.00123 |
| 270 | 16-08-2023 | 24-PA-MT-1001 B | Pump Valve | Valve | 2 | Dis. Valve | 56.2 | 0.00111 |
| 271 | 16-08-2023 | 21-LV-5551 | Control Valve | Valve | 2 | Control Valve | 122.4 | 0.00198 |
| 272 | 16-08-2023 | 21-PV-5651 | Control Valve | Valve | 6 | Control Valve | 610.3 | 0.00658 |
| 273 | 16-08-2023 | 21-FV-5551 | Control Valve | Valve | 4 | Control Valve | 26.4 | 0.00063 |
| 274 | 16-08-2023 | 21-LV-5251 | Control Valve | Valve | 3 | Control Valve | 89.4 | 0.00157 |
| 275 | 16-08-2023 | 21-UV-5251 | Control Valve | Valve | 8 | Control Valve | 5.2 | 0.00019 |
| 276 | 16-08-2023 | 11-PV-2051 | Control Valve | Valve | 10 | Control Valve | 89.4 | 0.00157 |
| 277 | 16-08-2023 | 11-HV-1351 | Control Valve | Valve | 6 | Control Valve | 5.1 | 0.00019 |
| 278 | 16-08-2023 | 11-FV-1352 | Control Valve | Valve | 8 | Control Valve | 23.6 | 0.00058 |
| 279 | 16-08-2023 | 11-FV-1256 | Control Valve | Valve | 2 | Control Valve | 2.4 | 0.00011 |
| 280 | 16-08-2023 | 11-FV-1255 | Control Valve | Valve | 4 | Control Valve | 36.2 | 0.00080 |
| 281 | 16-08-2023 | 12-PV-1510 | Control Valve | Valve | 3 | Control Valve | 30.1 | 0.00070 |
| 282 | 16-08-2023 | 11-LV-1251 | Control Valve | Valve | 8 | Control Valve | 23.5 | 0.00058 |
| 283 | 16-08-2023 | 12-PV-1155 | Control Valve | Valve | 6 | Control Valve | 80.4 | 0.00145 |
| 284 | 16-08-2023 | 11-FV-1501 | Control Valve | Valve | 6 | Control Valve | 3.6 | 0.00014 |
| 285 | 16-08-2023 | 11-HV-1101 | Control Valve | Valve | 8 | Bypass Valve | 52.1 | 0.00105 |
| 286 | 16-08-2023 | 11-LV-1602 | Control Valve | Valve | 12 | Bypass Valve | 89.5 | 0.00157 |
| 287 | 16-08-2023 | 12-FV-1203 | Control Valve | Valve | 2 | Bypass Valve | 5.1 | 0.00019 |
| 288 | 16-08-2023 | 12-FV-1205 | Control Valve | Valve | 1 | Bypass Valve | 24.6 | 0.00060 |
| 289 | 16-08-2023 | 22-PV-1201 B | Control Valve | Valve | 3 | Bypass Valve | 3.6 | 0.00014 |
| 290 | 16-08-2023 | 22-PV-1201 A | Control Valve | Valve | 1 | Bypass Valve | 95.4 | 0.00165 |
| 291 | 16-08-2023 | 22-TV-1106 | Control Valve | Valve | 6 | Bypass Valve | 23.6 | 0.00058 |
| 292 | 16-08-2023 | 11-FV-1303 | Control Valve | Valve | 10 | Bypass Valve | 50.1 | 0.00102 |
| 293 | 16-08-2023 | 22-FV-1101 | Control Valve | Valve | 6 | Bypass Valve | 23.6 | 0.00058 |
| 294 | 16-08-2023 | 11-HV-1301 | Control Valve | Valve | 10 | Bypass Valve | 65.4 | 0.00124 |
| 295 | 16-08-2023 | 12-PV-1501 | Control Valve | Valve | 2 | Bypass Valve | 333.6 | 0.00419 |
| 296 | 16-08-2023 | 12-FV-1204 | Control Valve | Valve | 2 | Bypass Valve | 80.1 | 0.00145 |
| 297 | 16-08-2023 | 12-PV-1503 | Control Valve | Valve | 3 | Bypass Valve | 23.6 | 0.00058 |
| 298 | 16-08-2023 | 12-FV-1504 | Control Valve | Valve | 6 | Bypass Valve | 4.4 | 0.00017 |
| 299 | 16-08-2023 | 11-LV-1601 | Control Valve | Valve | 6 | Bypass Valve | 23.6 | 0.00058 |
| 300 | 16-08-2023 | 11-LV-1603 | Control Valve | Valve | 1 | Bypass Valve | 53.2 | 0.00107 |
| 301 | 16-08-2023 | 12-PV-1155 | Control Valve | Valve | 1 | Bypass Valve | 2.1 | 0.00010 |
| 302 | 16-08-2023 | 13-PV-1201 | Control Valve | Valve | 1 | Bypass Valve | 36.2 | 0.00080 |
| 303 | 16-08-2023 | 22-PV-1101 | Control Valve | Valve | 2 | Bypass Valve | 80.6 | 0.00145 |
| 304 | 16-08-2023 | 11-PV-4104 | Control Valve | Valve | 1 | Bypass Valve | 35.4 | 0.00079 |
| 305 | 16-08-2023 | 11-LV-4101 | Control Valve | Valve | 1 | Bypass Valve | 80.2 | 0.00145 |
| 306 | 16-08-2023 | 11-UV-4101 | Control Valve | Valve | 1 | Bypass Valve | 69.5 | 0.00130 |
| 307 | 16-08-2023 | 11-LV-4104 | Control Valve | Valve | 1 | Bypass Valve | 23.1 | 0.00057 |
| 308 | 16-08-2023 | 11-UV-4102 | Control Valve | Valve | 1 | Bypass Valve | 13.6 | 0.00039 |
| 309 | 16-08-2023 | 21-FV-1102 | Control Valve | Valve | 1 | Bypass Valve | 52.2 | 0.00105 |
| 310 | 16-08-2023 | 21-FV-1101 | Control Valve | Valve | 4 | Bypass Valve | 144.6 | 0.00225 |
| 311 | 16-08-2023 | 22-PV-1202 | Control Valve | Valve | 4 | Bypass Valve | 36.5 | 0.00080 |
| 312 | 16-08-2023 | 22-PV-12012 | Control Valve | Valve | 4 | Bypass Valve | 23.1 | 0.00057 |
| 313 | 16-08-2023 | 22-LV-1206 | Control Valve | Valve | 1 | Bypass Valve | 20.6 | 0.00053 |
| 314 | 16-08-2023 | 22-LV-1201 | Control Valve | Valve | 1 | Bypass Valve | 56.4 | 0.00111 |

# BHARAT PETROLEUM CORPORATION LIMITED, BINA-M.P.
## LDAR QUARTERLY REPORT FOR JULY 2023 TO SEPTEMBER 2023
### Monitoring - VOC Plant – CDU / VDU

| S.No. | Date | Tag. No. | Equipment | Component | Line size (inch) | Location | Screening Value sv (ppm) | Estimated Emission Rate kg/day |
|---|---|---|---|---|---|---|---|---|
| COMPONENT - VALVE | | | | | | | | |
| 315 | 16-08-2023 | 33-PDV-1102 | Control Valve | Valve | 2 | Bypass Valve | 189.6 | 0.00275 |
| 316 | 16-08-2023 | 33-PDV-1202 | Control Valve | Valve | 2 | Bypass Valve | 35.4 | 0.00079 |
| 317 | 16-08-2023 | 22-LV-1104 | Control Valve | Valve | 1 | Bypass Valve | 156.5 | 0.00238 |
| 318 | 16-08-2023 | 22-LV-1102 | Control Valve | Valve | 8 | Bypass Valve | 92.4 | 0.00161 |
| 319 | 16-08-2023 | 21-UV-1102 | Control Valve | Valve | 4 | Bypass Valve | 15.2 | 0.00042 |
| 320 | 16-08-2023 | 21-LV-1101 | Control Valve | Valve | 4 | Bypass Valve | 33.6 | 0.00076 |
| 321 | 16-08-2023 | 21-UV-1101 | Control Valve | Valve | 1 | Bypass Valve | 78.9 | 0.00143 |
| 322 | 16-08-2023 | 22-LV-1102 | Control Valve | Valve | 1 | Bypass Valve | 963.2 | 0.00924 |
| 323 | 16-08-2023 | 22-TV-1109 | Control Valve | Valve | 4 | Bypass Valve | 1.5 | 0.00007 |
| 324 | 16-08-2023 | 12-PV-1601 | Control Valve | Valve | 6 | Bypass Valve | 6.4 | 0.00022 |
| 325 | 16-08-2023 | 13-PDV-1301 | Control Valve | Valve | 8 | Bypass Valve | 23.6 | 0.00058 |
| 326 | 16-08-2023 | 21-FV-2602 | Control Valve | Valve | 2 | Bypass Valve | 80.4 | 0.00145 |
| 327 | 16-08-2023 | 21-UV-2101 | Control Valve | Valve | 6 | Bypass Valve | 23.6 | 0.00058 |
| 328 | 16-08-2023 | 21-LV-2201 | Control Valve | Valve | 3 | Bypass Valve | 166.5 | 0.00250 |
| 329 | 16-08-2023 | 21-UV-2201 | Control Valve | Valve | 2 | Bypass Valve | 23.4 | 0.00058 |
| 330 | 16-08-2023 | 21-TV-2401 | Control Valve | Valve | 2 | Bypass Valve | 20.5 | 0.00052 |
| 331 | 16-08-2023 | 21-LV-2301 | Control Valve | Valve | 2 | Bypass Valve | 63.1 | 0.00121 |
| 332 | 16-08-2023 | 21-FV-2401 | Control Valve | Valve | 2 | Bypass Valve | 23.1 | 0.00057 |
| 333 | 16-08-2023 | 21-PV-2601 | Control Valve | Valve | 1 | Bypass Valve | 56.4 | 0.00111 |
| 334 | 16-08-2023 | 21-PDV-2501 | Control Valve | Valve | 1 | Bypass Valve | 13.5 | 0.00038 |
| 335 | 16-08-2023 | 24-PV-2103 | Control Valve | Valve | 1 | Bypass Valve | 462.2 | 0.00535 |
| 336 | 16-08-2023 | 21-LV-2501 | Control Valve | Valve | 1 | Bypass Valve | 3.6 | 0.00014 |
| 337 | 16-08-2023 | 24 FV 1502 | Control Valve | Valve | 1 | Bypass Valve | 12.2 | 0.00036 |
| 338 | 16-08-2023 | 24-LV-1601 | Control Valve | Valve | 2 | Bypass Valve | 30.5 | 0.00070 |
| 339 | 16-08-2023 | 24-LV-1501 | Control Valve | Valve | 1 | Bypass Valve | 63.5 | 0.00122 |
| 340 | 16-08-2023 | 24-UV-1501 | Control Valve | Valve | 6 | Bypass Valve | 29.5 | 0.00069 |
| 341 | 16-08-2023 | 24-PDV-1601 | Control Valve | Valve | 8 | Bypass Valve | 16.4 | 0.00044 |
| 342 | 16-08-2023 | 24-LV-1901 | Control Valve | Valve | 2 | Bypass Valve | 23.5 | 0.00058 |
| 343 | 16-08-2023 | 24-FV-1504 | Control Valve | Valve | 1 | Bypass Valve | 155.6 | 0.00237 |
| 344 | 16-08-2023 | 24-UV-1601 | Control Valve | Valve | 1 | Bypass Valve | 36.5 | 0.00080 |
| 345 | 16-08-2023 | 24-FV-1601 | Control Valve | Valve | 4 | Bypass Valve | 170.2 | 0.00254 |
| 346 | 16-08-2023 | 21-FV-2501 | Control Valve | Valve | 4 | Bypass Valve | 56.2 | 0.00111 |
| 347 | 16-08-2023 | 11-LV-4107 | Control Valve | Valve | 2 | Bypass Valve | 8.5 | 0.00027 |
| 348 | 16-08-2023 | 11-UV-4103 | Control Valve | Valve | 2 | Bypass Valve | 62.4 | 0.00120 |
| 349 | 16-08-2023 | 11-FV-2007 | Control Valve | Valve | 4 | Bypass Valve | 146.2 | 0.00227 |
| 350 | 16-08-2023 | 11-PV-2003 | Control Valve | Valve | 6 | Bypass Valve | 63.5 | 0.00122 |
| 351 | 16-08-2023 | 11-PV-1201 | Control Valve | Valve | 12 | Bypass Valve | 23.1 | 0.00057 |
| 352 | 16-08-2023 | 13-FV-1301 | Control Valve | Valve | 6 | Bypass Valve | 163.5 | 0.00246 |
| 353 | 16-08-2023 | 11-PV-2001 | Control Valve | Valve | 1 | Bypass Valve | 50.1 | 0.00102 |
| 354 | 16-08-2023 | 13-FV-1302 | Control Valve | Valve | 2 | Bypass Valve | 23.4 | 0.00058 |
| 355 | 16-08-2023 | 11-PV-2002 | Control Valve | Valve | 4 | Bypass Valve | 6.4 | 0.00022 |
| 356 | 16-08-2023 | 11-TV-1107 | Control Valve | Valve | 10 | Bypass Valve | 3.2 | 0.00013 |
| 357 | 16-08-2023 | 11-FV-1702 | Control Valve | Valve | 6 | Bypass Valve | 189.5 | 0.00275 |
| 358 | 16-08-2023 | 11-FV-1701 | Control Valve | Valve | 10 | Bypass Valve | 6.4 | 0.00022 |
| 359 | 16-08-2023 | 11-UV-2001 | Control Valve | Valve | 10 | Bypass Valve | 25.3 | 0.00061 |
| 360 | 16-08-2023 | 11-PV-4110 | Control Valve | Valve | 1 | Bypass Valve | 15.6 | 0.00043 |

# BHARAT PETROLEUM CORPORATION LIMITED, BINA-M.P.
## LDAR QUARTERLY REPORT FOR JULY 2023 TO SEPTEMBER 2023
**Monitoring - VOC** **Plant – CDU / VDU**

| S.No. | Date | Tag. No. | Equipment | Component | Line size (inch) | Location | Screening Value sv (ppm) | Estimated Emission Rate kg/day |
|---|---|---|---|---|---|---|---|---|
| **COMPONENT - VALVE** | | | | | | | | |
| 361 | 16-08-2023 | 13-FV-1303 | Control Valve | Valve | 10 | Bypass Valve | 66.4 | 0.00126 |
| 362 | 16-08-2023 | 13-FV-1202 | Control Valve | Valve | 6 | Bypass Valve | 23.5 | 0.00058 |
| 363 | 16-08-2023 | 11-FV-1202 | Control Valve | Valve | 4 | Bypass Valve | 3.1 | 0.00013 |
| 364 | 16-08-2023 | 11-LV-1201 B | Control Valve | Valve | 2 | Bypass Valve | 26.5 | 0.00063 |
| 365 | 16-08-2023 | 11-LV-1201 A | Control Valve | Valve | 2 | Bypass Valve | 66.8 | 0.00126 |
| 366 | 16-08-2023 | 13-FV-1102 | Control Valve | Valve | 2 | Bypass Valve | 93.1 | 0.00162 |
| 367 | 16-08-2023 | 11-FV-1201 N | Control Valve | Valve | 1 | Bypass Valve | 42.5 | 0.00090 |
| 368 | 16-08-2023 | 12-FV-1302 | Control Valve | Valve | 1 | Bypass Valve | 156.2 | 0.00238 |
| 369 | 16-08-2023 | 11-FV-1504 | Control Valve | Valve | 4 | Bypass Valve | 3.4 | 0.00014 |
| 370 | 16-08-2023 | 12-FV-1502 | Control Valve | Valve | 4 | Bypass Valve | 146.5 | 0.00227 |
| 371 | 16-08-2023 | 11-FV-1503 | Control Valve | Valve | 12 | Bypass Valve | 23.5 | 0.00058 |
| 372 | 16-08-2023 | 11-FV-1802 | Control Valve | Valve | 1 | Bypass Valve | 2.3 | 0.00010 |
| 373 | 16-08-2023 | 11-UV-1802 | Control Valve | Valve | 2 | Bypass Valve | 166.5 | 0.00250 |
| 374 | 16-08-2023 | 11-FV-1804 | Control Valve | Valve | 4 | Bypass Valve | 23.8 | 0.00058 |
| 375 | 16-08-2023 | 11-FV-1703 | Control Valve | Valve | 4 | Bypass Valve | 93.4 | 0.00162 |
| 376 | 16-08-2023 | 11-FV-1508 | Control Valve | Valve | 4 | Bypass Valve | 79.5 | 0.00144 |
| 377 | 16-08-2023 | 11-UV-1454 | Control Valve | Valve | 2 | Bypass Valve | 63.1 | 0.00121 |
| 378 | 16-08-2023 | 11-UV-1456 | Control Valve | Valve | 2 | Bypass Valve | 20.1 | 0.00052 |
| 379 | 16-08-2023 | 11-UV-1451 | Control Valve | Valve | 2 | Bypass Valve | 46.5 | 0.00096 |
| 380 | 16-08-2023 | 11 PV 5801 | Control Valve | Valve | 2 | Bypass Valve | 23.8 | 0.00058 |
| 381 | 16-08-2023 | 11 FV 1604 | Control Valve | Valve | 1 | Bypass Valve | 93.1 | 0.00162 |
| 382 | 16-08-2023 | 11-FV-1605 | Control Valve | Valve | 3 | Bypass Valve | 26.4 | 0.00063 |
| 383 | 16-08-2023 | 11-FV-1403 | Control Valve | Valve | 6 | Bypass Valve | 3.1 | 0.00013 |
| 384 | 16-08-2023 | 11-FV-1404 | Control Valve | Valve | 2 | Bypass Valve | 25.4 | 0.00061 |
| 385 | 16-08-2023 | 11-FV-1402 | Control Valve | Valve | 2 | Bypass Valve | 80.1 | 0.00145 |
| 386 | 16-08-2023 | 11-FV-1401 | Control Valve | Valve | 4 | Bypass Valve | 23.5 | 0.00058 |
| 387 | 16-08-2023 | 11-PV-1454 | Control Valve | Valve | 4 | Bypass Valve | 46.1 | 0.00096 |
| 388 | 16-08-2023 | 11-PV-1455 | Control Valve | Valve | 1 | Bypass Valve | 23.6 | 0.00058 |
| 389 | 16-08-2023 | 11-FV-1406 | Control Valve | Valve | 4 | Bypass Valve | 155.6 | 0.00237 |
| 390 | 16-08-2023 | 21-UV-5751 | Control Valve | Valve | 2 | Bypass Valve | 3.4 | 0.00014 |
| **Total VOC Emission from Valves** | | | | | | | | **0.47047** |
| **COMPONENT - LOCAL VENT** | | | | | | | | |
| 1 | 14-08-2023 | 12-PSV-1502 | Local Vent | Flange | - | Flange | 26.5 | **0.00111** |

# BHARAT PETROLEUM CORPORATION LIMITED, BINA-M.P.
## LDAR QUARTERLY REPORT FOR JULY 2023 TO SEPTEMBER 2023
### Monitoring - VOC Plant – CDU / VDU

| S.No. | Date | Tag. No. | Equipment | Component | Line size (inch) | Location | Screening Value sv (ppm) | Estimated Emission Rate kg/day |
|---|---|---|---|---|---|---|---|---|
| COMPONENT - PSV | | | | | | | | |
| 1 | 14-08-2023 | 21-PSV-2302 | PSV | Flange | 6 | Inlet | 56.3 | 0.00188 |
| | 14-08-2023 | 21-PSV-2302 | PSV | Flange | 6 | Outlet | 147.5 | 0.00370 |
| 2 | 14-08-2023 | 21-PSV-2401 | PSV | Flange | 6 | Inlet | 26.3 | 0.00110 |
| | 14-08-2023 | 21-PSV-2401 | PSV | Flange | 6 | Outlet | 46.1 | 0.00163 |
| 3 | 14-08-2023 | 21-PSV-2601 | PSV | Flange | 8 | Inlet | 23.5 | 0.00102 |
| | 14-08-2023 | 21-PSV-2601 | PSV | Flange | 8 | Outlet | 99.5 | 0.00281 |
| 4 | 14-08-2023 | 22-PSV-1201 A | PSV | Flange | 4 | Inlet | 36.4 | 0.00138 |
| | 14-08-2023 | 22-PSV-1201 A | PSV | Flange | 4 | Outlet | 25.4 | 0.00108 |
| 5 | 14-08-2023 | 22-PSV-1201 B | PSV | Flange | 8 | Inlet | 156.2 | 0.00386 |
| | 14-08-2023 | 22-PSV-1201 B | PSV | Flange | 8 | Outlet | 34.5 | 0.00133 |
| 6 | 14-08-2023 | 21-PSV-2301 | PSV | Flange | 4 | Inlet | 79.5 | 0.00240 |
| | 14-08-2023 | 21-PSV-2301 | PSV | Flange | 4 | Outlet | 613.2 | 0.01008 |
| 7 | 14-08-2023 | 22-PSV-1104 | PSV | Flange | 4 | Inlet | 46.5 | 0.00164 |
| | 14-08-2023 | 22-PSV-1104 | PSV | Flange | 4 | Outlet | 23.1 | 0.00101 |
| 8 | 14-08-2023 | 21-PSV-1103 B | PSV | Flange | 6 | Inlet | 79.5 | 0.00240 |
| | 14-08-2023 | 21-PSV-1103 B | PSV | Flange | 6 | Outlet | 63.1 | 0.00204 |
| 9 | 14-08-2023 | 21-PSV-1208 | PSV | Flange | 6 | Inlet | 20.5 | 0.00092 |
| | 14-08-2023 | 21-PSV-1208 | PSV | Flange | 6 | Outlet | 46.2 | 0.00164 |
| 10 | 14-08-2023 | 21-PSV-1207 | PSV | Flange | 8 | Inlet | 88.7 | 0.00259 |
| | 14-08-2023 | 21-PSV-1207 | PSV | Flange | 8 | Outlet | 6.3 | 0.00040 |
| 11 | 14-08-2023 | 22-PSV-1301 | PSV | Flange | 6 | Inlet | 143.2 | 0.00363 |
| | 14-08-2023 | 22-PSV-1301 | PSV | Flange | 6 | Outlet | 93.4 | 0.00269 |
| 12 | 14-08-2023 | 22-PSV-1302 | PSV | Flange | 6 | Inlet | 52.1 | 0.00178 |
| | 14-08-2023 | 22-PSV-1302 | PSV | Flange | 6 | Outlet | 63.2 | 0.00204 |
| 13 | 14-08-2023 | 22-PSV-1204 | PSV | Flange | 6 | Inlet | 415.2 | 0.00767 |
| | 14-08-2023 | 22-PSV-1204 | PSV | Flange | 6 | Outlet | 89.4 | 0.00260 |
| 14 | 14-08-2023 | 22-PSV-1203 | PSV | Flange | 6 | Inlet | 70.6 | 0.00221 |
| | 14-08-2023 | 22-PSV-1203 | PSV | Flange | 6 | Outlet | 32.5 | 0.00128 |
| 15 | 14-08-2023 | 33-PSV-1204 | PSV | Flange | 8 | Inlet | 15.2 | 0.00075 |
| | 14-08-2023 | 33-PSV-1204 | PSV | Flange | 8 | Outlet | 36.2 | 0.00138 |
| 16 | 14-08-2023 | 33-PSV-1203 | PSV | Flange | 8 | Inlet | 146.2 | 0.00368 |
| | 14-08-2023 | 33-PSV-1203 | PSV | Flange | 8 | Outlet | 35.2 | 0.00135 |
| 17 | 14-08-2023 | 33-PSV-1103 | PSV | Flange | 4 | Inlet | 66.4 | 0.00211 |
| | 14-08-2023 | 33-PSV-1103 | PSV | Flange | 4 | Outlet | 50.2 | 0.00174 |
| 18 | 14-08-2023 | 33-PSV-1105 | PSV | Flange | 6 | Inlet | 93.1 | 0.00268 |
| | 14-08-2023 | 33-PSV-1105 | PSV | Flange | 6 | Outlet | 42.5 | 0.00154 |
| 19 | 14-08-2023 | 11-PSV-4106 | PSV | Flange | 8 | Inlet | 2.6 | 0.00022 |
| | 14-08-2023 | 11-PSV-4106 | PSV | Flange | 8 | Outlet | 35.4 | 0.00136 |
| 20 | 14-08-2023 | 11-PSV-4107 | PSV | Flange | 6 | Inlet | 144.2 | 0.00364 |
| | 14-08-2023 | 11-PSV-4107 | PSV | Flange | 6 | Outlet | 63.5 | 0.00205 |
| 21 | 14-08-2023 | 11-PSV-2401 | PSV | Flange | 6 | Inlet | 20.3 | 0.00092 |
| | 14-08-2023 | 11-PSV-2401 | PSV | Flange | 6 | Outlet | 66.5 | 0.00212 |
| 22 | 14-08-2023 | 21-PSV-2602 | PSV | Flange | 6 | Inlet | 93.1 | 0.00268 |
| | 14-08-2023 | 21-PSV-2602 | PSV | Flange | 6 | Outlet | 146.3 | 0.00368 |

# BHARAT PETROLEUM CORPORATION LIMITED, BINA-M.P.
## LDAR QUARTERLY REPORT FOR JULY 2023 TO SEPTEMBER 2023
### Monitoring - VOC Plant – CDU / VDU

| S.No. | Date | Tag. No. | Equipment | Component | Line size (inch) | Location | Screening Value sv (ppm) | Estimated Emission Rate kg/day |
|---|---|---|---|---|---|---|---|---|
| COMPONENT - PSV | | | | | | | | |
| 23 | 14-08-2023 | 21-PSV-2501 | PSV | Flange | 6 | Inlet | 29.4 | 0.00119 |
| | 14-08-2023 | 21-PSV-2501 | PSV | Flange | 6 | Outlet | 85.4 | 0.00252 |
| 24 | 14-08-2023 | 12-PSV-2101 | PSV | Flange | 4 | Inlet | 163.2 | 0.00398 |
| | 14-08-2023 | 12-PSV-2101 | PSV | Flange | 4 | Outlet | 80.2 | 0.00241 |
| 25 | 14-08-2023 | 12-PSV-1301 | PSV | Flange | 6 | Inlet | 46.2 | 0.00164 |
| | 14-08-2023 | 12-PSV-1301 | PSV | Flange | 6 | Outlet | 3.9 | 0.00029 |
| 26 | 14-08-2023 | 12-PSV-1207 | PSV | Flange | 6 | Inlet | 83.4 | 0.00248 |
| | 14-08-2023 | 12-PSV-1207 | PSV | Flange | 6 | Outlet | 16.4 | 0.00079 |
| 27 | 14-08-2023 | 11-PSV-1302 | PSV | Flange | 8 | Inlet | 52.5 | 0.00179 |
| | 14-08-2023 | 11-PSV-1302 | PSV | Flange | 8 | Outlet | 70.1 | 0.00220 |
| 28 | 14-08-2023 | 12-PSV-1205 | PSV | Flange | 8 | Inlet | 246.3 | 0.00531 |
| | 14-08-2023 | 12-PSV-1205 | PSV | Flange | 8 | Outlet | 93.4 | 0.00269 |
| 29 | 14-08-2023 | 12-PSV-1206 | PSV | Flange | 12 | Inlet | 25.2 | 0.00107 |
| | 14-08-2023 | 12-PSV-1206 | PSV | Flange | 12 | Outlet | 13.6 | 0.00069 |
| 30 | 14-08-2023 | 12-PSV-1207 | PSV | Flange | 12 | Inlet | 96.4 | 0.00275 |
| | 14-08-2023 | 12-PSV-1207 | PSV | Flange | 12 | Outlet | 23.1 | 0.00101 |
| 31 | 14-08-2023 | 33-PSV-1102 | PSV | Flange | 8 | Inlet | 56.4 | 0.00188 |
| | 14-08-2023 | 33-PSV-1102 | PSV | Flange | 8 | Outlet | 80.6 | 0.00242 |
| 32 | 14-08-2023 | 21-PSV-1403 | PSV | Flange | 8 | Inlet | 34.1 | 0.00132 |
| | 14-08-2023 | 21-PSV-1403 | PSV | Flange | 8 | Outlet | 26.9 | 0.00112 |
| 33 | 14-08-2023 | 11-PSV-1503 | PSV | Flange | 6 | Inlet | 3.4 | 0.00026 |
| | 14-08-2023 | 11-PSV-1503 | PSV | Flange | 6 | Outlet | 25.1 | 0.00107 |
| 34 | 14-08-2023 | 21-PSV-4107 A | PSV | Flange | 6 | Inlet | 16.4 | 0.00079 |
| | 14-08-2023 | 21-PSV-4107 A | PSV | Flange | 6 | Outlet | 93.4 | 0.00269 |
| 35 | 14-08-2023 | 21-PSV-4107 B | PSV | Flange | 6 | Inlet | 72.1 | 0.00224 |
| | 14-08-2023 | 21-PSV-4107 B | PSV | Flange | 6 | Outlet | 25.2 | 0.00107 |
| 36 | 14-08-2023 | 23-PSV-2102 | PSV | Flange | 6 | Inlet | 166.4 | 0.00403 |
| | 14-08-2023 | 23-PSV-2102 | PSV | Flange | 6 | Outlet | 23.8 | 0.00103 |
| 37 | 14-08-2023 | 23-PSV-2103 | PSV | Flange | 6 | Inlet | 93.4 | 0.00269 |
| | 14-08-2023 | 23-PSV-2103 | PSV | Flange | 6 | Outlet | 189.6 | 0.00442 |
| 38 | 14-08-2023 | 22-PSV-2108 | PSV | Flange | 4 | Inlet | 634.8 | 0.01033 |
| | 14-08-2023 | 22-PSV-2108 | PSV | Flange | 4 | Outlet | 5.4 | 0.00036 |
| 39 | 14-08-2023 | 22-PSV-2107 | PSV | Flange | 6 | Inlet | 26.3 | 0.00110 |
| | 14-08-2023 | 22-PSV-2107 | PSV | Flange | 6 | Outlet | 170.2 | 0.00410 |
| 40 | 14-08-2023 | 11-PSV-3201 | PSV | Flange | 8 | Inlet | 36.9 | 0.00140 |
| | 14-08-2023 | 11-PSV-3201 | PSV | Flange | 8 | Outlet | 6.4 | 0.00041 |
| 41 | 14-08-2023 | 12-PSV-1302 | PSV | Flange | 6 | Inlet | 23.6 | 0.00102 |
| | 14-08-2023 | 12-PSV-1302 | PSV | Flange | 6 | Outlet | 122.3 | 0.00325 |
| 42 | 14-08-2023 | 11-PSV-1351 | PSV | Flange | 6 | Inlet | 96.5 | 0.00275 |
| | 14-08-2023 | 11-PSV-1351 | PSV | Flange | 6 | Outlet | 846.2 | 0.01265 |
| 43 | 14-08-2023 | 11-PSV-1352 | PSV | Flange | 4 | Inlet | 3.6 | 0.00027 |
| | 14-08-2023 | 11-PSV-1352 | PSV | Flange | 4 | Outlet | 72.1 | 0.00224 |
| 44 | 14-08-2023 | 11-PSV-1551 | PSV | Flange | 4 | Inlet | 26.5 | 0.00111 |
| | 14-08-2023 | 11-PSV-1551 | PSV | Flange | 4 | Outlet | 3.4 | 0.00026 |

# BHARAT PETROLEUM CORPORATION LIMITED, BINA-M.P.
## LDAR QUARTERLY REPORT FOR JULY 2023 TO SEPTEMBER 2023
### Monitoring - VOC Plant – CDU / VDU

| S.No. | Date | Tag. No. | Equipment | Component | Line size (inch) | Location | Screening Value sv (ppm) | Estimated Emission Rate kg/day |
|---|---|---|---|---|---|---|---|---|
| COMPONENT - PSV | | | | | | | | |
| 45 | 14-08-2023 | 11-PSV-3051 | PSV | Flange | 6 | Inlet | 16.5 | 0.00079 |
| | 14-08-2023 | 11-PSV-3051 | PSV | Flange | 6 | Outlet | 2.2 | 0.00019 |
| 46 | 14-08-2023 | 11-PSV-3251 | PSV | Flange | 8 | Inlet | 43.6 | 0.00157 |
| | 14-08-2023 | 11-PSV-3251 | PSV | Flange | 8 | Outlet | 93.1 | 0.00268 |
| 47 | 14-08-2023 | 12-PSV-1251 | PSV | Flange | 12 | Inlet | 26.4 | 0.00110 |
| | 14-08-2023 | 12-PSV-1251 | PSV | Flange | 12 | Outlet | 3.1 | 0.00025 |
| 48 | 14-08-2023 | 12-PSV-1455 | PSV | Flange | 6 | Inlet | 25.8 | 0.00109 |
| | 14-08-2023 | 12-PSV-1455 | PSV | Flange | 6 | Outlet | 46.7 | 0.00165 |
| 49 | 14-08-2023 | 13-PSV-1151 | PSV | Flange | 8 | Inlet | 29.4 | 0.00119 |
| | 14-08-2023 | 13-PSV-1151 | PSV | Flange | 8 | Outlet | 6.1 | 0.00039 |
| 50 | 14-08-2023 | 21-PSV-5151 | PSV | Flange | 6 | Inlet | 46.1 | 0.00163 |
| | 14-08-2023 | 21-PSV-5151 | PSV | Flange | 6 | Outlet | 12.5 | 0.00065 |
| 51 | 14-08-2023 | 21-PSV-5251 | PSV | Flange | 4 | Inlet | 156.4 | 0.00386 |
| | 14-08-2023 | 21-PSV-5251 | PSV | Flange | 4 | Outlet | 89.4 | 0.00260 |
| 52 | 14-08-2023 | 21-PSV-5252 | PSV | Flange | 4 | Inlet | 3.6 | 0.00027 |
| | 14-08-2023 | 21-PSV-5252 | PSV | Flange | 4 | Outlet | 13.5 | 0.00069 |
| 53 | 14-08-2023 | 21-PSV-5253 | PSV | Flange | 4 | Inlet | 62.4 | 0.00202 |
| | 14-08-2023 | 21-PSV-5253 | PSV | Flange | 4 | Outlet | 79.4 | 0.00240 |
| 54 | 14-08-2023 | 21-PSV-5351 | PSV | Flange | 6 | Inlet | 16.4 | 0.00079 |
| | 14-08-2023 | 21-PSV-5351 | PSV | Flange | 6 | Outlet | 25.2 | 0.00107 |
| 55 | 14-08-2023 | 21-PSV-5352 | PSV | Flange | 6 | Inlet | 63.4 | 0.00205 |
| | 14-08-2023 | 21-PSV-5352 | PSV | Flange | 6 | Outlet | 93.1 | 0.00268 |
| 56 | 14-08-2023 | 21-PSV-5451 | PSV | Flange | 4 | Inlet | 26.4 | 0.00110 |
| | 14-08-2023 | 21-PSV-5451 | PSV | Flange | 4 | Outlet | 80.1 | 0.00241 |
| 57 | 14-08-2023 | 21-PSV-5452 | PSV | Flange | 4 | Inlet | 26.4 | 0.00110 |
| | 14-08-2023 | 21-PSV-5452 | PSV | Flange | 4 | Outlet | 133.5 | 0.00345 |
| 58 | 14-08-2023 | 21-PSV-5453 | PSV | Flange | 8 | Inlet | 62.5 | 0.00202 |
| | 14-08-2023 | 21-PSV-5453 | PSV | Flange | 8 | Outlet | 96.4 | 0.00275 |
| 59 | 14-08-2023 | 21-PSV-5454 | PSV | Flange | 6 | Inlet | 48.7 | 0.00170 |
| | 14-08-2023 | 21-PSV-5454 | PSV | Flange | 6 | Outlet | 96.5 | 0.00275 |
| 60 | 14-08-2023 | 21-PSV-5551 | PSV | Flange | 4 | Inlet | 122.5 | 0.00325 |
| | 14-08-2023 | 21-PSV-5551 | PSV | Flange | 4 | Outlet | 55.4 | 0.00186 |
| 61 | 14-08-2023 | 21-PSV-5651 | PSV | Flange | 6 | Inlet | 62.1 | 0.00202 |
| | 14-08-2023 | 21-PSV-5651 | PSV | Flange | 6 | Outlet | 34.8 | 0.00134 |
| 62 | 14-08-2023 | 21-PSV-5652 | PSV | Flange | 4 | Inlet | 6.4 | 0.00041 |
| | 14-08-2023 | 21-PSV-5652 | PSV | Flange | 4 | Outlet | 8.5 | 0.00050 |
| 63 | 14-08-2023 | 12-PSV-1413 | PSV | Flange | 4 | Inlet | 166.5 | 0.00403 |
| | 14-08-2023 | 12-PSV-1413 | PSV | Flange | 4 | Outlet | 3.4 | 0.00026 |
| 64 | 14-08-2023 | 12-PSV-1414 | PSV | Flange | 6 | Inlet | 93.1 | 0.00268 |
| | 14-08-2023 | 12-PSV-1414 | PSV | Flange | 6 | Outlet | 20.4 | 0.00092 |
| 65 | 14-08-2023 | 12-PSV-1425 | PSV | Flange | 6 | Inlet | 56.4 | 0.00188 |
| | 14-08-2023 | 12-PSV-1425 | PSV | Flange | 6 | Outlet | 8.4 | 0.00049 |
| 66 | 14-08-2023 | 12-PSV-1426 | PSV | Flange | 8 | Inlet | 263.4 | 0.00557 |
| | 14-08-2023 | 12-PSV-1426 | PSV | Flange | 8 | Outlet | 25.5 | 0.00108 |

# BHARAT PETROLEUM CORPORATION LIMITED, BINA-M.P.
## LDAR QUARTERLY REPORT FOR JULY 2023 TO SEPTEMBER 2023
### Monitoring - VOC Plant – CDU / VDU

| S.No. | Date | Tag. No. | Equipment | Component | Line size (inch) | Location | Screening Value sv (ppm) | Estimated Emission Rate kg/day |
|---|---|---|---|---|---|---|---|---|
| COMPONENT - PSV | | | | | | | | |
| 67 | 14-08-2023 | 12-PSV-1437 | PSV | Flange | 10 | Inlet | 93.2 | 0.00268 |
| | 14-08-2023 | 12-PSV-1437 | PSV | Flange | 10 | Outlet | 15.2 | 0.00075 |
| 68 | 14-08-2023 | 12-PSV-1438 | PSV | Flange | 12 | Inlet | 66.5 | 0.00212 |
| | 14-08-2023 | 12-PSV-1438 | PSV | Flange | 12 | Outlet | 46.2 | 0.00164 |
| 69 | 14-08-2023 | 24-PSV-1002 A | PSV | Flange | 12 | Inlet | 13.5 | 0.00069 |
| | 14-08-2023 | 24-PSV-1002 A | PSV | Flange | 12 | Outlet | 80.1 | 0.00241 |
| 70 | 14-08-2023 | 24-PSV-1002 B | PSV | Flange | 6 | Inlet | 46.5 | 0.00164 |
| | 14-08-2023 | 24-PSV-1002 B | PSV | Flange | 6 | Outlet | 123.5 | 0.00327 |
| **Total VOC Emission from PSV** | | | | | | | | **0.29217** |

# BHARAT PETROLEUM CORPORATION LIMITED, BINA-M.P.
## LDAR QUARTERLY REPORT FOR JULY 2023 TO SEPTEMBER 2023
### Monitoring - VOC Plant – CDU / VDU

| S.No. | Date | Tag. No. | Equipment | Component | Line size (inch) | Location | Screening Value sv (ppm) | Estimated Emission Rate kg/day |
|---|---|---|---|---|---|---|---|---|
| COMPONENT - EXCHANGER | | | | | | | | |
| 1 | 14-08-2023 | 11-EE-00-130-A | Exchanger | Flange | 6 | Inlet | 74.3 | 0.00229 |
| | 14-08-2023 | 11-EE-00-130-A | Exchanger | Flange | 4 | Outlet | 56.1 | 0.00188 |
| 2 | 14-08-2023 | 11-EE-00-130-B | Exchanger | Flange | 6 | Inlet | 15.3 | 0.00075 |
| | 14-08-2023 | 11-EE-00-130-B | Exchanger | Flange | 4 | Outlet | 26.5 | 0.00111 |
| 3 | 14-08-2023 | 11-EE-00-131-A | Exchanger | Flange | 6 | Inlet | 47.5 | 0.00167 |
| | 14-08-2023 | 11-EE-00-131-A | Exchanger | Flange | 4 | Outlet | 63.9 | 0.00206 |
| 4 | 14-08-2023 | 11-EE-00-131-B | Exchanger | Flange | 10 | Inlet | 78.5 | 0.00238 |
| | 14-08-2023 | 11-EE-00-131-B | Exchanger | Flange | 8 | Outlet | 3.1 | 0.00025 |
| 5 | 14-08-2023 | 11-EE-00-101-A | Exchanger | Flange | 8 | Inlet | 20.6 | 0.00093 |
| | 14-08-2023 | 11-EE-00-101-A | Exchanger | Flange | 6 | Outlet | 46.2 | 0.00164 |
| 6 | 14-08-2023 | 11-EE-00-101-B | Exchanger | Flange | 8 | Inlet | 35.1 | 0.00135 |
| | 14-08-2023 | 11-EE-00-101-B | Exchanger | Flange | 6 | Outlet | 18.6 | 0.00086 |
| 7 | 14-08-2023 | 11-EE-00-115-B | Exchanger | Flange | 6 | Inlet | 32.5 | 0.00128 |
| | 14-08-2023 | 11-EE-00-115-B | Exchanger | Flange | 4 | Outlet | 80.2 | 0.00241 |
| 8 | 14-08-2023 | 11-EE-00-115-A | Exchanger | Flange | 6 | Inlet | 16.5 | 0.00079 |
| | 14-08-2023 | 11-EE-00-115-A | Exchanger | Flange | 4 | Outlet | 34.2 | 0.00133 |
| 9 | 14-08-2023 | 11-EE-00-121-A | Exchanger | Flange | 10 | Inlet | 73.1 | 0.00226 |
| | 14-08-2023 | 11-EE-00-121-A | Exchanger | Flange | 8 | Outlet | 9.5 | 0.00054 |
| 10 | 14-08-2023 | 11-EE-00-120 | Exchanger | Flange | 12 | Inlet | 26.5 | 0.00111 |
| | 14-08-2023 | 11-EE-00-120 | Exchanger | Flange | 10 | Outlet | 3.4 | 0.00026 |
| 11 | 14-08-2023 | 11-EE-00-119 | Exchanger | Flange | 8 | Inlet | 22.3 | 0.00098 |
| | 14-08-2023 | 11-EE-00-119 | Exchanger | Flange | 6 | Outlet | 413.2 | 0.00764 |
| 12 | 14-08-2023 | 11-EE-00-118 | Exchanger | Flange | 6 | Inlet | 6.5 | 0.00041 |
| | 14-08-2023 | 11-EE-00-118 | Exchanger | Flange | 6 | Outlet | 35.1 | 0.00135 |
| 13 | 14-08-2023 | 11-EE-00-104 | Exchanger | Flange | 12 | Inlet | 13.2 | 0.00068 |
| | 14-08-2023 | 11-EE-00-104 | Exchanger | Flange | 10 | Outlet | 60.5 | 0.00198 |
| 14 | 14-08-2023 | 11-EE-00-136-A | Exchanger | Flange | 14 | Inlet | 88.3 | 0.00258 |
| | 14-08-2023 | 11-EE-00-136-A | Exchanger | Flange | 12 | Outlet | 17.3 | 0.00082 |
| 15 | 14-08-2023 | 11-EE-00-136-B | Exchanger | Flange | 14 | Inlet | 26.5 | 0.00111 |
| | 14-08-2023 | 11-EE-00-136-B | Exchanger | Flange | 12 | Outlet | 256.4 | 0.00546 |
| 16 | 14-08-2023 | 11-EE-00-123-A | Exchanger | Flange | 8 | Inlet | 56.3 | 0.00188 |
| | 14-08-2023 | 11-EE-00-123-A | Exchanger | Flange | 6 | Outlet | 20.8 | 0.00093 |
| 17 | 14-08-2023 | 11-EE-00-122-A | Exchanger | Flange | 8 | Inlet | 76.1 | 0.00233 |
| | 14-08-2023 | 11-EE-00-122-A | Exchanger | Flange | 6 | Outlet | 312.5 | 0.00628 |
| 18 | 14-08-2023 | 11-EE-00-122-B | Exchanger | Flange | 8 | Inlet | 99.6 | 0.00281 |
| | 14-08-2023 | 11-EE-00-122-B | Exchanger | Flange | 6 | Outlet | 66.5 | 0.00212 |
| 19 | 14-08-2023 | 11-EE-00-124-A | Exchanger | Flange | 8 | Inlet | 80.3 | 0.00242 |
| | 14-08-2023 | 11-EE-00-124-A | Exchanger | Flange | 6 | Outlet | 3.4 | 0.00026 |
| 20 | 14-08-2023 | 11-EE-00-124-B | Exchanger | Flange | 8 | Inlet | 6.4 | 0.00041 |
| | 14-08-2023 | 11-EE-00-124-B | Exchanger | Flange | 6 | Outlet | 12.5 | 0.00065 |
| 21 | 14-08-2023 | 11-EE-00-134-A | Exchanger | Flange | 12 | Inlet | 123.4 | 0.00327 |
| | 14-08-2023 | 11-EE-00-134-A | Exchanger | Flange | 10 | Outlet | 5.6 | 0.00037 |
| 22 | 14-08-2023 | 11-EE-00-114-A | Exchanger | Flange | 12 | Inlet | 5.7 | 0.00038 |
| | 14-08-2023 | 11-EE-00-114-A | Exchanger | Flange | 10 | Outlet | 833.2 | 0.01251 |

# BHARAT PETROLEUM CORPORATION LIMITED, BINA-M.P.
## LDAR QUARTERLY REPORT FOR JULY 2023 TO SEPTEMBER 2023
### Monitoring - VOC Plant – CDU / VDU

| S.No. | Date | Tag. No. | Equipment | Component | Line size (inch) | Location | Screening Value sv (ppm) | Estimated Emission Rate kg/day |
|---|---|---|---|---|---|---|---|---|
| COMPONENT - EXCHANGER | | | | | | | | |
| 23 | 14-08-2023 | 11-EE-00-114-B | Exchanger | Flange | 12 | Inlet | 13.6 | 0.00069 |
| | 14-08-2023 | 11-EE-00-114-B | Exchanger | Flange | 10 | Outlet | 40.1 | 0.00148 |
| 24 | 14-08-2023 | 11-EE-00-114-C | Exchanger | Flange | 12 | Inlet | 23.5 | 0.00102 |
| | 14-08-2023 | 11-EE-00-114-C | Exchanger | Flange | 10 | Outlet | 83.1 | 0.00247 |
| 25 | 14-08-2023 | 11-EE-00-114-D | Exchanger | Flange | 12 | Inlet | 45.4 | 0.00162 |
| | 14-08-2023 | 11-EE-00-114-D | Exchanger | Flange | 10 | Outlet | 6.5 | 0.00041 |
| 26 | 14-08-2023 | 11-EE-00-132-A | Exchanger | Flange | 12 | Inlet | 199.6 | 0.00458 |
| | 14-08-2023 | 11-EE-00-132-A | Exchanger | Flange | 10 | Outlet | 6.4 | 0.00041 |
| 27 | 14-08-2023 | 11-EE-00-132-B | Exchanger | Flange | 12 | Inlet | 52.1 | 0.00178 |
| | 14-08-2023 | 11-EE-00-132-B | Exchanger | Flange | 10 | Outlet | 3.4 | 0.00026 |
| 28 | 14-08-2023 | 11-EE-00-110-A | Exchanger | Flange | 12 | Inlet | 15.4 | 0.00076 |
| | 14-08-2023 | 11-EE-00-110-A | Exchanger | Flange | 10 | Outlet | 154.2 | 0.00382 |
| 29 | 14-08-2023 | 11-EE-00-110-B | Exchanger | Flange | 12 | Inlet | 5.4 | 0.00036 |
| | 14-08-2023 | 11-EE-00-110-B | Exchanger | Flange | 10 | Outlet | 2.1 | 0.00019 |
| 30 | 14-08-2023 | 11-EE-00-109 A | Exchanger | Flange | 12 | Inlet | 30.6 | 0.00123 |
| | 14-08-2023 | 11-EE-00-109 A | Exchanger | Flange | 10 | Outlet | 12.3 | 0.00065 |
| 31 | 14-08-2023 | 11-EE-00-109-B | Exchanger | Flange | 12 | Inlet | 33.9 | 0.00132 |
| | 14-08-2023 | 11-EE-00-109-B | Exchanger | Flange | 10 | Outlet | 63.5 | 0.00205 |
| 32 | 14-08-2023 | 11-EE-00-109-C | Exchanger | Flange | 12 | Inlet | 47.1 | 0.00166 |
| | 14-08-2023 | 11-EE-00-109-C | Exchanger | Flange | 10 | Outlet | 20.1 | 0.00091 |
| 33 | 14-08-2023 | 11-EE-00-107-A/B | Exchanger | Flange | 12 | Inlet | 46.8 | 0.00165 |
| | 14-08-2023 | 11-EE-00-107-A/B | Exchanger | Flange | 10 | Outlet | 93.2 | 0.00268 |
| 34 | 14-08-2023 | 11-EE-00-107-C | Exchanger | Flange | 12 | Inlet | 16.4 | 0.00079 |
| | 14-08-2023 | 11-EE-00-107-C | Exchanger | Flange | 10 | Outlet | 82.1 | 0.00245 |
| 35 | 14-08-2023 | 11-EE-00-108-A | Exchanger | Flange | 12 | Inlet | 144.3 | 0.00365 |
| | 14-08-2023 | 11-EE-00-108-A | Exchanger | Flange | 10 | Outlet | 26.5 | 0.00111 |
| 36 | 14-08-2023 | 11-EE-00-108-B | Exchanger | Flange | 12 | Inlet | 89.1 | 0.00260 |
| | 14-08-2023 | 11-EE-00-108-B | Exchanger | Flange | 10 | Outlet | 23.5 | 0.00102 |
| 37 | 14-08-2023 | 11-EE-00-106 | Exchanger | Flange | 12 | Inlet | 46.5 | 0.00164 |
| | 14-08-2023 | 11-EE-00-106 | Exchanger | Flange | 10 | Outlet | 215.1 | 0.00483 |
| 38 | 14-08-2023 | 11-EE-00-113 | Exchanger | Flange | 12 | Inlet | 89.4 | 0.00260 |
| | 14-08-2023 | 11-EE-00-113 | Exchanger | Flange | 10 | Outlet | 6.7 | 0.00042 |
| 39 | 14-08-2023 | 11-EE-00-112-A | Exchanger | Flange | 12 | Inlet | 83.4 | 0.00248 |
| | 14-08-2023 | 11-EE-00-112-A | Exchanger | Flange | 10 | Outlet | 15.4 | 0.00076 |
| 40 | 14-08-2023 | 11-EE-00-112-B | Exchanger | Flange | 12 | Inlet | 99.8 | 0.00281 |
| | 14-08-2023 | 11-EE-00-112-B | Exchanger | Flange | 10 | Outlet | 88.5 | 0.00259 |
| 41 | 14-08-2023 | 11-EE-00-112-C | Exchanger | Flange | 12 | Inlet | 631.2 | 0.01029 |
| | 14-08-2023 | 11-EE-00-112-C | Exchanger | Flange | 10 | Outlet | 73.1 | 0.00226 |
| 42 | 14-08-2023 | 11-EE-00-122-B | Exchanger | Flange | 12 | Inlet | 5.4 | 0.00036 |
| | 14-08-2023 | 11-EE-00-122-B | Exchanger | Flange | 10 | Outlet | 26.3 | 0.00110 |
| 43 | 14-08-2023 | 11-EE-00-111-A | Exchanger | Flange | 12 | Inlet | 6.4 | 0.00041 |
| | 14-08-2023 | 11-EE-00-111-A | Exchanger | Flange | 10 | Outlet | 23.1 | 0.00101 |
| 44 | 14-08-2023 | 11-EE-00-111-B | Exchanger | Flange | 12 | Inlet | 89.5 | 0.00261 |
| | 14-08-2023 | 11-EE-00-111-B | Exchanger | Flange | 10 | Outlet | 62.1 | 0.00202 |

# BHARAT PETROLEUM CORPORATION LIMITED, BINA-M.P.
## LDAR QUARTERLY REPORT FOR JULY 2023 TO SEPTEMBER 2023
### Monitoring - VOC Plant – CDU / VDU

| S.No. | Date | Tag. No. | Equipment | Component | Line size (inch) | Location | Screening Value sv (ppm) | Estimated Emission Rate kg/day |
|---|---|---|---|---|---|---|---|---|
| COMPONENT - EXCHANGER | | | | | | | | |
| 45 | 14-08-2023 | 11-EE-00-102-A | Exchanger | Flange | 12 | Inlet | 144.2 | 0.00364 |
| | 14-08-2023 | 11-EE-00-102-A | Exchanger | Flange | 10 | Outlet | 36.5 | 0.00139 |
| 46 | 14-08-2023 | 11-EE-00-102-B | Exchanger | Flange | 12 | Inlet | 6.4 | 0.00041 |
| | 14-08-2023 | 11-EE-00-102-B | Exchanger | Flange | 10 | Outlet | 23.9 | 0.00103 |
| 47 | 14-08-2023 | 11-EE-00-103-A | Exchanger | Flange | 12 | Inlet | 76.4 | 0.00233 |
| | 14-08-2023 | 11-EE-00-103-A | Exchanger | Flange | 10 | Outlet | 23.1 | 0.00101 |
| 48 | 14-08-2023 | 11-EE-00-103-B | Exchanger | Flange | 12 | Inlet | 30.6 | 0.00123 |
| | 14-08-2023 | 11-EE-00-103-B | Exchanger | Flange | 10 | Outlet | 5.4 | 0.00036 |
| 49 | 14-08-2023 | 11-EE-00-105-A | Exchanger | Flange | 12 | Inlet | 546.5 | 0.00930 |
| | 14-08-2023 | 11-EE-00-105-A | Exchanger | Flange | 10 | Outlet | 6.2 | 0.00040 |
| 50 | 14-08-2023 | 11-EE-00-105-B | Exchanger | Flange | 12 | Inlet | 36.2 | 0.00138 |
| | 14-08-2023 | 11-EE-00-105-B | Exchanger | Flange | 10 | Outlet | 2.4 | 0.00020 |
| 51 | 14-08-2023 | 12-EE-00-106-A | Exchanger | Flange | 8 | Inlet | 36.2 | 0.00138 |
| | 14-08-2023 | 12-EE-00-106-A | Exchanger | Flange | 6 | Outlet | 93.1 | 0.00268 |
| 52 | 14-08-2023 | 12-EE-00-106-B | Exchanger | Flange | 8 | Inlet | 20.4 | 0.00092 |
| | 14-08-2023 | 12-EE-00-106-B | Exchanger | Flange | 6 | Outlet | 23.6 | 0.00102 |
| 53 | 14-08-2023 | 12-EE-00-123-A | Exchanger | Flange | 12 | Inlet | 99.5 | 0.00281 |
| | 14-08-2023 | 12-EE-00-123-A | Exchanger | Flange | 10 | Outlet | 6.4 | 0.00041 |
| 54 | 14-08-2023 | 12-EE-00-123-B | Exchanger | Flange | 12 | Inlet | 13.2 | 0.00068 |
| | 14-08-2023 | 12-EE-00-123-B | Exchanger | Flange | 10 | Outlet | 56.4 | 0.00188 |
| 55 | 14-08-2023 | 13-EE-00-129-A | Exchanger | Flange | 12 | Inlet | 23.1 | 0.00101 |
| | 14-08-2023 | 13-EE-00-129-A | Exchanger | Flange | 10 | Outlet | 179.5 | 0.00425 |
| 56 | 14-08-2023 | 12-EE-00-104-A | Exchanger | Flange | 8 | Inlet | 63.2 | 0.00204 |
| | 14-08-2023 | 12-EE-00-104-A | Exchanger | Flange | 6 | Outlet | 3.1 | 0.00025 |
| 57 | 14-08-2023 | 12-EE-00-114 | Exchanger | Flange | 6 | Inlet | 26.5 | 0.00111 |
| | 14-08-2023 | 12-EE-00-114 | Exchanger | Flange | 4 | Outlet | 40.6 | 0.00150 |
| 58 | 14-08-2023 | 12-EE-00-108-B | Exchanger | Flange | 12 | Inlet | 32.6 | 0.00128 |
| | 14-08-2023 | 12-EE-00-108-B | Exchanger | Flange | 10 | Outlet | 93.4 | 0.00269 |
| 59 | 14-08-2023 | 12-EE-00-108-A | Exchanger | Flange | 12 | Inlet | 12.6 | 0.00066 |
| | 14-08-2023 | 12-EE-00-108-A | Exchanger | Flange | 10 | Outlet | 35.2 | 0.00135 |
| 60 | 14-08-2023 | 12-EE-00-133-A/B | Exchanger | Flange | 12 | Inlet | 26.4 | 0.00110 |
| | 14-08-2023 | 12-EE-00-133-A/B | Exchanger | Flange | 10 | Outlet | 89.3 | 0.00260 |
| 61 | 14-08-2023 | 12-EE-00-106-B | Exchanger | Flange | 8 | Inlet | 6.5 | 0.00041 |
| | 14-08-2023 | 12-EE-00-106-B | Exchanger | Flange | 6 | Outlet | 13.5 | 0.00069 |
| 62 | 14-08-2023 | 12-EE-00-106-A | Exchanger | Flange | 8 | Inlet | 146.2 | 0.00368 |
| | 14-08-2023 | 12-EE-00-106-A | Exchanger | Flange | 6 | Outlet | 30.2 | 0.00121 |
| 63 | 14-08-2023 | 21-EE-00-1001 | Exchanger | Flange | 6 | Inlet | 4.6 | 0.00032 |
| | 14-08-2023 | 21-EE-00-1001 | Exchanger | Flange | 8 | Outlet | 3.2 | 0.00025 |
| 64 | 14-08-2023 | 21-EE-00-1002 | Exchanger | Flange | 6 | Inlet | 70.6 | 0.00221 |
| | 14-08-2023 | 21-EE-00-1002 | Exchanger | Flange | 6 | Outlet | 3.8 | 0.00028 |
| 65 | 14-08-2023 | 11-EE-00-1003 | Exchanger | Flange | 8 | Inlet | 93.1 | 0.00268 |
| | 14-08-2023 | 11-EE-00-1003 | Exchanger | Flange | 8 | Outlet | 42.5 | 0.00154 |
| 66 | 14-08-2023 | 11-EE-00-1001 | Exchanger | Flange | 6 | Inlet | 63.2 | 0.00204 |
| | 14-08-2023 | 11-EE-00-1001 | Exchanger | Flange | 8 | Outlet | 13.2 | 0.00068 |
| 67 | 14-08-2023 | 11-EE-00-114 E/F | Exchanger | Flange | 6 | Inlet | 56.2 | 0.00188 |
| | 14-08-2023 | 11-EE-00-114 E/F | Exchanger | Flange | 6 | Outlet | 4.1 | 0.00030 |
| | | | | | | | Total VOC Emission from Exchanger | 0.24102 |

**Total VOC Emission from CDU/VDU in Quarter July 2023 to September 2023 is 1.00477 kg/day**

# BHARAT PETROLEUM CORPORATION LIMITED, BINA-M.P.
## LDAR QUARTERLY REPORT FOR JULY 2023 TO SEPTEMBER 2023
### Monitoring - VOC Plant – MS BLOCK

| S.No. | Date | Tag. No. | Equipment | Component | Line size (inch) | Location | Screening Value sv (ppm) | Estimated Emission Rate kg/day |
|---|---|---|---|---|---|---|---|---|
| COMPONENT - VALVE | | | | | | | | |
| 1 | 17-08-2023 | 20-PA-CF-103 A | Pump Valve | Valve | 6 | Suc. Valve | 56.9 | 0.00112 |
| 2 | 17-08-2023 | 20-PA-CF-103 B | Pump Valve | Valve | 6 | Suc. Valve | 156.3 | 0.00238 |
| 3 | 17-08-2023 | 20-PA-CF-102 A | Pump Valve | Valve | 8 | Suc. Valve | 53.1 | 0.00106 |
| 4 | 17-08-2023 | 20-PA-CF-102 B | Pump Valve | Valve | 8 | Suc. Valve | 78.8 | 0.00143 |
| 5 | 17-08-2023 | 19-PA-CF-106 A | Pump Valve | Valve | 10 | Suc. Valve | 90.4 | 0.00158 |
| 6 | 17-08-2023 | 19-PA-CF-106 B | Pump Valve | Valve | 10 | Suc. Valve | 26.4 | 0.00063 |
| 7 | 17-08-2023 | 19-PA-CF-104 A | Pump Valve | Valve | 16 | Suc. Valve | 56.1 | 0.00111 |
| 8 | 17-08-2023 | 19-PA-CF-104 B | Pump Valve | Valve | 16 | Suc. Valve | 36.2 | 0.00080 |
| 9 | 17-08-2023 | 19-PA-CF-103 A | Pump Valve | Valve | 6 | Suc. Valve | 110.6 | 0.00184 |
| 10 | 17-08-2023 | 19-PA-CF-103 B | Pump Valve | Valve | 6 | Suc. Valve | 93.5 | 0.00162 |
| 11 | 17-08-2023 | 19-PA-CF-101 A | Pump Valve | Valve | 10 | Suc. Valve | 26.5 | 0.00063 |
| 12 | 17-08-2023 | 19-PA-CF-101 B | Pump Valve | Valve | 10 | Suc. Valve | 83.6 | 0.00149 |
| 13 | 17-08-2023 | 19-PA-CF-105 A | Pump Valve | Valve | 8 | Suc. Valve | 17.5 | 0.00046 |
| 14 | 17-08-2023 | 19-PA-CF-105 B | Pump Valve | Valve | 8 | Suc. Valve | 89.6 | 0.00157 |
| 15 | 17-08-2023 | 20-PA-CF-101 A | Pump Valve | Valve | 8 | Suc. Valve | 36.2 | 0.00080 |
| 16 | 17-08-2023 | 20-PA-CF-101 B | Pump Valve | Valve | 8 | Suc. Valve | 55.6 | 0.00110 |
| 17 | 17-08-2023 | 15-PA-CF-231 A | Pump Valve | Valve | 3 | Suc. Valve | 35.4 | 0.00079 |
| 18 | 17-08-2023 | 15-PA-CF-231 B | Pump Valve | Valve | 3 | Suc. Valve | 13.5 | 0.00038 |
| 19 | 17-08-2023 | 15-PA-CF-201 A | Pump Valve | Valve | 8 | Suc. Valve | 213.3 | 0.00300 |
| 20 | 17-08-2023 | 15-PA-CF-201 B | Pump Valve | Valve | 8 | Suc. Valve | 89.6 | 0.00157 |
| 21 | 17-08-2023 | 15-PA-CF-202 A | Pump Valve | Valve | 6 | Suc. Valve | 32.1 | 0.00073 |
| 22 | 17-08-2023 | 15-PA-CF-202 B | Pump Valve | Valve | 6 | Suc. Valve | 6.1 | 0.00021 |
| 23 | 17-08-2023 | 15-PA-CF-208 A | Pump Valve | Valve | 10 | Suc. Valve | 30.5 | 0.00070 |
| 24 | 17-08-2023 | 15-PA-CF-208 B | Pump Valve | Valve | 10 | Suc. Valve | 26.4 | 0.00063 |
| 25 | 17-08-2023 | 15-PA-CF-206 A | Pump Valve | Valve | 8 | Suc. Valve | 23.1 | 0.00057 |
| 26 | 17-08-2023 | 15-PA-CF-206 B | Pump Valve | Valve | 8 | Suc. Valve | 56.9 | 0.00112 |
| 27 | 17-08-2023 | 15-PA-CF-207 A | Pump Valve | Valve | 4 | Suc. Valve | 99.5 | 0.00170 |
| 28 | 17-08-2023 | 15-PA-CF-207 B | Pump Valve | Valve | 4 | Suc. Valve | 6.4 | 0.00022 |
| 29 | 17-08-2023 | 15-PA-CF-220 A | Pump Valve | Valve | 12 | Suc. Valve | 23.1 | 0.00057 |
| 30 | 17-08-2023 | 15-PA-CF-220 B | Pump Valve | Valve | 12 | Suc. Valve | 50.6 | 0.00103 |
| 31 | 17-08-2023 | 15-PA-CF-220 C | Pump Valve | Valve | 12 | Suc. Valve | 3.9 | 0.00015 |
| 32 | 17-08-2023 | 15-PA-CF-209 A | Pump Valve | Valve | 10 | Suc. Valve | 41.2 | 0.00088 |
| 33 | 17-08-2023 | 15-PA-CF-209 B | Pump Valve | Valve | 10 | Suc. Valve | 35.6 | 0.00079 |
| 34 | 17-08-2023 | 15-PA-CF-210 A | Pump Valve | Valve | 8 | Suc. Valve | 70.2 | 0.00131 |
| 35 | 17-08-2023 | 15-PA-CF-210 B | Pump Valve | Valve | 8 | Suc. Valve | 3.6 | 0.00014 |
| 36 | 17-08-2023 | 15-PA-CF-205 A | Pump Valve | Valve | 3 | Suc. Valve | 13.5 | 0.00038 |
| 37 | 17-08-2023 | 15-PA-CF-205 B | Pump Valve | Valve | 3 | Suc. Valve | 80.2 | 0.00145 |
| 38 | 17-08-2023 | 20-PA-CF-103 A | Pump Valve | Valve | 4 | Dis. Valve | 96.4 | 0.00166 |
| 39 | 17-08-2023 | 20-PA-CF-103 B | Pump Valve | Valve | 4 | Dis. Valve | 112.6 | 0.00186 |
| 40 | 17-08-2023 | 20-PA-CF-102 A | Pump Valve | Valve | 6 | Dis. Valve | 35.4 | 0.00079 |
| 41 | 17-08-2023 | 20-PA-CF-102 B | Pump Valve | Valve | 6 | Dis. Valve | 3275.0 | 0.02304 |
| 42 | 17-08-2023 | 19-PA-CF-106 A | Pump Valve | Valve | 8 | Dis. Valve | 53.1 | 0.00106 |

# BHARAT PETROLEUM CORPORATION LIMITED, BINA-M.P.
## LDAR QUARTERLY REPORT FOR JULY 2023 TO SEPTEMBER 2023
### Monitoring - VOC Plant – MS BLOCK

| S.No. | Date | Tag. No. | Equipment | Component | Line size (inch) | Location | Screening Value sv (ppm) | Estimated Emission Rate kg/day |
|---|---|---|---|---|---|---|---|---|
| COMPONENT - VALVE | | | | | | | | |
| 43 | 17-08-2023 | 19-PA-CF-106 B | Pump Valve | Valve | 8 | Dis. Valve | 46.8 | 0.00097 |
| 44 | 17-08-2023 | 19-PA-CF-104 A | Pump Valve | Valve | 14 | Dis. Valve | 93.1 | 0.00162 |
| 45 | 17-08-2023 | 19-PA-CF-104 B | Pump Valve | Valve | 14 | Dis. Valve | 25.4 | 0.00061 |
| 46 | 17-08-2023 | 19-PA-CF-103 A | Pump Valve | Valve | 4 | Dis. Valve | 66.8 | 0.00126 |
| 47 | 17-08-2023 | 19-PA-CF-103 B | Pump Valve | Valve | 4 | Dis. Valve | 346.5 | 0.00431 |
| 48 | 17-08-2023 | 19-PA-CF-101 A | Pump Valve | Valve | 8 | Dis. Valve | 91.7 | 0.00160 |
| 49 | 17-08-2023 | 19-PA-CF-101 B | Pump Valve | Valve | 8 | Dis. Valve | 5.6 | 0.00020 |
| 50 | 17-08-2023 | 19-PA-CF-105 A | Pump Valve | Valve | 6 | Dis. Valve | 20.3 | 0.00052 |
| 51 | 17-08-2023 | 19-PA-CF-105 B | Pump Valve | Valve | 6 | Dis. Valve | 6.4 | 0.00022 |
| 52 | 17-08-2023 | 20-PA-CF-101 A | Pump Valve | Valve | 6 | Dis. Valve | 59.1 | 0.00115 |
| 53 | 17-08-2023 | 20-PA-CF-101 B | Pump Valve | Valve | 6 | Dis. Valve | 42.1 | 0.00089 |
| 54 | 17-08-2023 | 15-PA-CF-231 A | Pump Valve | Valve | 2 | Dis. Valve | 98.4 | 0.00169 |
| 55 | 17-08-2023 | 15-PA-CF-231 B | Pump Valve | Valve | 2 | Dis. Valve | 6.8 | 0.00023 |
| 56 | 17-08-2023 | 15-PA-CF-201 A | Pump Valve | Valve | 6 | Dis. Valve | 416.5 | 0.00495 |
| 57 | 17-08-2023 | 15-PA-CF-201 B | Pump Valve | Valve | 6 | Dis. Valve | 3310.0 | 0.02322 |
| 58 | 17-08-2023 | 15-PA-CF-202 A | Pump Valve | Valve | 4 | Dis. Valve | 80.4 | 0.00145 |
| 59 | 17-08-2023 | 15-PA-CF-202 B | Pump Valve | Valve | 4 | Dis. Valve | 96.1 | 0.00166 |
| 60 | 17-08-2023 | 15-PA-CF-208 A | Pump Valve | Valve | 8 | Dis. Valve | 27.4 | 0.00065 |
| 61 | 17-08-2023 | 15-PA-CF-208 B | Pump Valve | Valve | 8 | Dis. Valve | 36.9 | 0.00081 |
| 62 | 17-08-2023 | 15-PA-CF-206 A | Pump Valve | Valve | 6 | Dis. Valve | 60.1 | 0.00117 |
| 63 | 17-08-2023 | 15-PA-CF-206 B | Pump Valve | Valve | 6 | Dis. Valve | 23.4 | 0.00058 |
| 64 | 17-08-2023 | 15-PA-CF-207 A | Pump Valve | Valve | 3 | Dis. Valve | 76.1 | 0.00139 |
| 65 | 17-08-2023 | 15-PA-CF-207 B | Pump Valve | Valve | 3 | Dis. Valve | 23.4 | 0.00058 |
| 66 | 17-08-2023 | 15-PA-CF-220 A | Pump Valve | Valve | 10 | Dis. Valve | 189.6 | 0.00275 |
| 67 | 17-08-2023 | 15-PA-CF-220 B | Pump Valve | Valve | 10 | Dis. Valve | 36.5 | 0.00080 |
| 68 | 17-08-2023 | 15-PA-CF-220 C | Pump Valve | Valve | 10 | Dis. Valve | 71.5 | 0.00133 |
| 69 | 17-08-2023 | 15-PA-CF-209 A | Pump Valve | Valve | 8 | Dis. Valve | 62.4 | 0.00120 |
| 70 | 17-08-2023 | 15-PA-CF-209 B | Pump Valve | Valve | 8 | Dis. Valve | 36.5 | 0.00080 |
| 71 | 17-08-2023 | 15-PA-CF-210 A | Pump Valve | Valve | 6 | Dis. Valve | 122.3 | 0.00198 |
| 72 | 17-08-2023 | 15-PA-CF-210 B | Pump Valve | Valve | 6 | Dis. Valve | 96.4 | 0.00166 |
| 73 | 17-08-2023 | 15-PA-CF-205 A | Pump Valve | Valve | 2 | Dis. Valve | 23.7 | 0.00058 |
| 74 | 17-08-2023 | 15-PA-CF-205 B | Pump Valve | Valve | 2 | Dis. Valve | 80.3 | 0.00145 |
| 75 | 17-08-2023 | 15-FV-3551 | Control Valve | Valve | 8 | Control Valve | 4535.0 | 0.02937 |
| 76 | 17-08-2023 | 15-PDV-8702 | Control Valve | Valve | 8 | Control Valve | 62.5 | 0.00120 |
| 77 | 17-08-2023 | 15-FV-8607 | Control Valve | Valve | 4 | Control Valve | 55.6 | 0.00110 |
| 78 | 17-08-2023 | 15-FV-8606 | Control Valve | Valve | 3 | Control Valve | 93.7 | 0.00163 |
| 79 | 17-08-2023 | 15-FV-8608 | Control Valve | Valve | 2 | Control Valve | 8.2 | 0.00026 |
| 80 | 17-08-2023 | 15-FV-8605 | Control Valve | Valve | 6 | Control Valve | 10.6 | 0.00032 |
| 81 | 17-08-2023 | 15-FV-8604 | Control Valve | Valve | 10 | Control Valve | 35.4 | 0.00079 |
| 82 | 17-08-2023 | 15-FV-8603 | Control Valve | Valve | 8 | Control Valve | 26.1 | 0.00063 |
| 83 | 17-08-2023 | 15-FV-8602 | Control Valve | Valve | 12 | Control Valve | 23.6 | 0.00058 |
| 84 | 17-08-2023 | 15-FV-8601 | Control Valve | Valve | 6 | Control Valve | 44.5 | 0.00093 |
| 85 | 17-08-2023 | 15-PV-8704 | Control Valve | Valve | 2 | Control Valve | 463.9 | 0.00536 |

# BHARAT PETROLEUM CORPORATION LIMITED, BINA-M.P.
## LDAR QUARTERLY REPORT FOR JULY 2023 TO SEPTEMBER 2023
### Monitoring - VOC Plant – MS BLOCK

| S.No. | Date | Tag. No. | Equipment | Component | Line size (inch) | Location | Screening Value sv (ppm) | Estimated Emission Rate kg/day |
|---|---|---|---|---|---|---|---|---|
| COMPONENT - VALVE | | | | | | | | |
| 86 | 17-08-2023 | 15-PV-8705 | Control Valve | Valve | 4 | Control Valve | 6.1 | 0.00021 |
| 87 | 17-08-2023 | 15-UV-8701 | Control Valve | Valve | 3 | Control Valve | 23.5 | 0.00058 |
| 88 | 17-08-2023 | 15-UV-8702 | Control Valve | Valve | 2 | Control Valve | 63.5 | 0.00122 |
| 89 | 17-08-2023 | 15-TV-8701 | Control Valve | Valve | 4 | Control Valve | 30.1 | 0.00070 |
| 90 | 17-08-2023 | 15-UV-8706 | Control Valve | Valve | 4 | Control Valve | 25.8 | 0.00062 |
| 91 | 17-08-2023 | 15-UV-8703 | Control Valve | Valve | 6 | Control Valve | 6.4 | 0.00022 |
| 92 | 17-08-2023 | 19-FV-1602 | Control Valve | Valve | 6 | Control Valve | 83.4 | 0.00149 |
| 93 | 17-08-2023 | 15-FV-6501 | Control Valve | Valve | 3 | Control Valve | 26.9 | 0.00064 |
| 94 | 17-08-2023 | 19-FV-1601 | Control Valve | Valve | 2 | Control Valve | 6.6 | 0.00022 |
| 95 | 17-08-2023 | 19-FV-2904 | Control Valve | Valve | 6 | Control Valve | 3.4 | 0.00014 |
| 96 | 17-08-2023 | 19-FV-2902N | Control Valve | Valve | 8 | Control Valve | 13.6 | 0.00039 |
| 97 | 17-08-2023 | 15-LV-3701 | Control Valve | Valve | 4 | Control Valve | 59.8 | 0.00116 |
| 98 | 17-08-2023 | 15-PDV-3401 | Control Valve | Valve | 6 | Control Valve | 3.4 | 0.00014 |
| 99 | 17-08-2023 | 15-LV-7701 | Control Valve | Valve | 6 | Control Valve | 25.6 | 0.00062 |
| 100 | 17-08-2023 | 15-FV-3504 | Control Valve | Valve | 8 | Control Valve | 5.3 | 0.00019 |
| 101 | 17-08-2023 | 15-LV-8001 | Control Valve | Valve | 2 | Control Valve | 66.8 | 0.00126 |
| 102 | 17-08-2023 | 15-FV-4503 | Control Valve | Valve | 6 | Control Valve | 93.1 | 0.00162 |
| 103 | 17-08-2023 | 15-FV-4402N | Control Valve | Valve | 8 | Control Valve | 56.3 | 0.00111 |
| 104 | 17-08-2023 | 15-TV-2101 | Control Valve | Valve | 3 | Control Valve | 144.6 | 0.00225 |
| 105 | 17-08-2023 | 15-FV-4401N | Control Valve | Valve | 4 | Control Valve | 93.6 | 0.00162 |
| 106 | 17-08-2023 | 15-FV-2903 | Control Valve | Valve | 2 | Control Valve | 28.7 | 0.00067 |
| 107 | 17-08-2023 | 15-FV-4504N | Control Valve | Valve | 6 | Control Valve | 63.1 | 0.00121 |
| 108 | 17-08-2023 | 15-FV-4001 | Control Valve | Valve | 4 | Control Valve | 25.6 | 0.00062 |
| 109 | 17-08-2023 | 15-FV-4002 | Control Valve | Valve | 8 | Control Valve | 179.6 | 0.00264 |
| 110 | 17-08-2023 | 15-FV-4101 | Control Valve | Valve | 6 | Control Valve | 35.2 | 0.00078 |
| 111 | 17-08-2023 | 15-LV-3101 | Control Valve | Valve | 4 | Control Valve | 2.6 | 0.00011 |
| 112 | 17-08-2023 | 15-FV-3602 | Control Valve | Valve | 4 | Control Valve | 4.3 | 0.00016 |
| 113 | 17-08-2023 | 15-FV-3703 | Control Valve | Valve | 2 | Control Valve | 23.6 | 0.00058 |
| 114 | 17-08-2023 | 15-FV-3503N | Control Valve | Valve | 2 | Control Valve | 3320.0 | 0.02327 |
| 115 | 17-08-2023 | 15-FV-3203N | Control Valve | Valve | 4 | Control Valve | 50.4 | 0.00102 |
| 116 | 17-08-2023 | 15-FV-3202 | Control Valve | Valve | 4 | Control Valve | 26.6 | 0.00064 |
| 117 | 17-08-2023 | 15-FV-4403 | Control Valve | Valve | 2 | Control Valve | 183.6 | 0.00268 |
| 118 | 17-08-2023 | 15-PDV-3104 | Control Valve | Valve | 2 | Control Valve | 177.5 | 0.00262 |
| 119 | 17-08-2023 | 15-FV-3101 | Control Valve | Valve | 6 | Control Valve | 63.8 | 0.00122 |
| 120 | 17-08-2023 | 15-FV-3903 | Control Valve | Valve | 8 | Control Valve | 540.6 | 0.00601 |
| 121 | 17-08-2023 | 15-FV-3601 | Control Valve | Valve | 6 | Control Valve | 35.9 | 0.00079 |
| 122 | 17-08-2023 | 15-XV-3601 | Control Valve | Valve | 4 | Control Valve | 89.6 | 0.00157 |
| 123 | 17-08-2023 | 15-FV-3302N | Control Valve | Valve | 2 | Control Valve | 43.1 | 0.00091 |
| 124 | 17-08-2023 | 15-FV-3501 | Control Valve | Valve | 2 | Control Valve | 20.5 | 0.00052 |
| 125 | 17-08-2023 | 15-FV-3401 | Control Valve | Valve | 6 | Control Valve | 66.5 | 0.00126 |
| 126 | 17-08-2023 | 15-FV-3502 | Control Valve | Valve | 4 | Control Valve | 37.4 | 0.00082 |
| 127 | 17-08-2023 | 15-FV-2801N | Control Valve | Valve | 8 | Control Valve | 50.6 | 0.00103 |
| 128 | 17-08-2023 | 15-UV-2801 | Control Valve | Valve | 6 | Control Valve | 99.6 | 0.00170 |
| 129 | 17-08-2023 | 15-TV-2801 B | Control Valve | Valve | 6 | Control Valve | 86.4 | 0.00153 |

# BHARAT PETROLEUM CORPORATION LIMITED, BINA-M.P.
## LDAR QUARTERLY REPORT FOR JULY 2023 TO SEPTEMBER 2023
### Monitoring - VOC Plant – MS BLOCK

| S.No. | Date | Tag. No. | Equipment | Component | Line size (inch) | Location | Screening Value sv (ppm) | Estimated Emission Rate kg/day |
|---|---|---|---|---|---|---|---|---|
| COMPONENT - VALVE | | | | | | | | |
| 130 | 17-08-2023 | 15-TV-2801 A | Control Valve | Valve | 4 | Control Valve | 2.1 | 0.00010 |
| 131 | 17-08-2023 | 15-UV-2701 | Control Valve | Valve | 4 | Control Valve | 36.8 | 0.00081 |
| 132 | 17-08-2023 | 15-HV-2703 A | Control Valve | Valve | 2 | Control Valve | 173.6 | 0.00257 |
| 133 | 17-08-2023 | 15-HV-2703 B | Control Valve | Valve | 2 | Control Valve | 52.8 | 0.00106 |
| 134 | 17-08-2023 | 15-UV-2702 | Control Valve | Valve | 2 | Control Valve | 63.9 | 0.00122 |
| 135 | 17-08-2023 | 15-FV-2703 | Control Valve | Valve | 6 | Control Valve | 91.2 | 0.00159 |
| 136 | 17-08-2023 | 15-PV-2702 | Control Valve | Valve | 8 | Control Valve | 36.5 | 0.00080 |
| 137 | 17-08-2023 | 15-FV-2701 | Control Valve | Valve | 8 | Control Valve | 3771.0 | 0.02559 |
| 138 | 17-08-2023 | 15-PV-1701 B | Control Valve | Valve | 6 | Control Valve | 35.2 | 0.00078 |
| 139 | 17-08-2023 | 15-PV-1701 A | Control Valve | Valve | 6 | Control Valve | 13.6 | 0.00039 |
| 140 | 17-08-2023 | 15-LV-1701N | Control Valve | Valve | 8 | Control Valve | 66.9 | 0.00126 |
| 141 | 17-08-2023 | 19-PV-2201N | Control Valve | Valve | 8 | Control Valve | 5.2 | 0.00019 |
| 142 | 17-08-2023 | 15-XV-2101 | Control Valve | Valve | 2 | Control Valve | 36.2 | 0.00080 |
| 143 | 17-08-2023 | 15-PV-2101 | Control Valve | Valve | 2 | Control Valve | 79.5 | 0.00144 |
| 144 | 17-08-2023 | 15-PV-2102 | Control Valve | Valve | 3 | Control Valve | 166.3 | 0.00249 |
| 145 | 17-08-2023 | 15-FV-2103 | Control Valve | Valve | 6 | Control Valve | 20.3 | 0.00052 |
| 146 | 17-08-2023 | 15-FV-2101 | Control Valve | Valve | 10 | Control Valve | 65.4 | 0.00124 |
| 147 | 17-08-2023 | 15-XV-2102 | Control Valve | Valve | 12 | Control Valve | 13.8 | 0.00039 |
| 148 | 17-08-2023 | 20-PV-2701 | Control Valve | Valve | 6 | Control Valve | 93.4 | 0.00162 |
| 149 | 17-08-2023 | 20-PV-2806 | Control Valve | Valve | 2 | Control Valve | 6.1 | 0.00021 |
| 150 | 17-08-2023 | 20-LV-2601 N | Control Valve | Valve | 10 | Control Valve | 23.7 | 0.00058 |
| 151 | 17-08-2023 | 20-LV-2301 | Control Valve | Valve | 2 | Control Valve | 80.6 | 0.00145 |
| 152 | 17-08-2023 | 20-PV-2301 B | Control Valve | Valve | 4 | Control Valve | 35.2 | 0.00078 |
| 153 | 17-08-2023 | 20-LV-2701 | Control Valve | Valve | 6 | Control Valve | 33.1 | 0.00075 |
| 154 | 17-08-2023 | 20-PV-2601 B | Control Valve | Valve | 8 | Control Valve | 20.6 | 0.00053 |
| 155 | 17-08-2023 | 20-PV-2601 A | Control Valve | Valve | 2 | Control Valve | 9.6 | 0.00030 |
| 156 | 17-08-2023 | 20-PV-2301 A | Control Valve | Valve | 6 | Control Valve | 163.5 | 0.00246 |
| 157 | 17-08-2023 | 25-FV-1302 | Control Valve | Valve | 2 | Control Valve | 23.5 | 0.00058 |
| 158 | 17-08-2023 | 20-LV-2001 | Control Valve | Valve | 2 | Control Valve | 3.4 | 0.00014 |
| 159 | 17-08-2023 | 20-FV-2002 | Control Valve | Valve | 3 | Control Valve | 6.1 | 0.00021 |
| 160 | 17-08-2023 | 19-FV-1701 N | Control Valve | Valve | 2 | Control Valve | 20.3 | 0.00052 |
| 161 | 17-08-2023 | 19-UV-1701 | Control Valve | Valve | 6 | Control Valve | 80.8 | 0.00146 |
| 162 | 17-08-2023 | 19-FV-2901 | Control Valve | Valve | 4 | Control Valve | 73.6 | 0.00136 |
| 163 | 17-08-2023 | 19-LV-2702 | Control Valve | Valve | 4 | Control Valve | 26.4 | 0.00063 |
| 164 | 17-08-2023 | 20-LV-3001 | Control Valve | Valve | 4 | Control Valve | 13.2 | 0.00038 |
| 165 | 17-08-2023 | 19-FV-2101 N | Control Valve | Valve | 2 | Control Valve | 50.6 | 0.00103 |
| 166 | 17-08-2023 | 19-FV-2501 N | Control Valve | Valve | 3 | Control Valve | 93.4 | 0.00162 |
| 167 | 17-08-2023 | 19-HV-2002 | Control Valve | Valve | 6 | Control Valve | 50.2 | 0.00102 |
| 168 | 17-08-2023 | 19-FV-2001 N | Control Valve | Valve | 6 | Control Valve | 2.6 | 0.00011 |
| 169 | 17-08-2023 | 19-FV-3201 C | Control Valve | Valve | 6 | Control Valve | 8.3 | 0.00027 |
| 170 | 17-08-2023 | 19-FV-3201 D | Control Valve | Valve | 2 | Control Valve | 82.3 | 0.00148 |
| 171 | 17-08-2023 | 19-FV-3201 B | Control Valve | Valve | 2 | Control Valve | 166.5 | 0.00250 |
| 172 | 17-08-2023 | 19-FV-3201 A | Control Valve | Valve | 2 | Control Valve | 34.5 | 0.00077 |

# BHARAT PETROLEUM CORPORATION LIMITED, BINA-M.P.
## LDAR QUARTERLY REPORT FOR JULY 2023 TO SEPTEMBER 2023
### Monitoring - VOC Plant – MS BLOCK

| S.No. | Date | Tag. No. | Equipment | Component | Line size (inch) | Location | Screening Value sv (ppm) | Estimated Emission Rate kg/day |
|---|---|---|---|---|---|---|---|---|
| COMPONENT - VALVE | | | | | | | | |
| 173 | 17-08-2023 | 19-UV-3505 A | Control Valve | Valve | 2 | Control Valve | 93.4 | 0.00162 |
| 174 | 17-08-2023 | 19-UV-3505 B | Control Valve | Valve | 2 | Control Valve | 163.2 | 0.00246 |
| 175 | 17-08-2023 | 19-UV-3305 B | Control Valve | Valve | 2 | Control Valve | 20.3 | 0.00052 |
| 176 | 17-08-2023 | 19-UV-3302 | Control Valve | Valve | 2 | Control Valve | 80.6 | 0.00145 |
| 177 | 17-08-2023 | 19-UV-3305 A | Control Valve | Valve | 2 | Control Valve | 35.4 | 0.00079 |
| 178 | 17-08-2023 | 19-UV-3304 | Control Valve | Valve | 2 | Control Valve | 20.6 | 0.00053 |
| 179 | 17-08-2023 | 19-UV-3303 | Control Valve | Valve | 2 | Control Valve | 35.4 | 0.00079 |
| 180 | 17-08-2023 | 19-FV-3302 | Control Valve | Valve | 2 | Control Valve | 13.8 | 0.00039 |
| 181 | 17-08-2023 | 19-FV-3101 D | Control Valve | Valve | 2 | Control Valve | 5.4 | 0.00019 |
| 182 | 17-08-2023 | 19-FV-3101 B | Control Valve | Valve | 2 | Control Valve | 6.1 | 0.00021 |
| 183 | 17-08-2023 | 19-FV-3101 A | Control Valve | Valve | 2 | Control Valve | 489.6 | 0.00558 |
| 184 | 17-08-2023 | 19-FV-3101 C | Control Valve | Valve | 2 | Control Valve | 35.2 | 0.00078 |
| 185 | 17-08-2023 | 19-FV-3402 | Control Valve | Valve | 2 | Control Valve | 26.1 | 0.00063 |
| 186 | 17-08-2023 | 19-UV-3404 | Control Valve | Valve | 4 | Control Valve | 23.1 | 0.00057 |
| 187 | 17-08-2023 | 19-UV-3405 | Control Valve | Valve | 2 | Control Valve | 8.2 | 0.00026 |
| 188 | 17-08-2023 | 19-UV-3405 A | Control Valve | Valve | 2 | Control Valve | 16.3 | 0.00044 |
| 189 | 17-08-2023 | 19-UV-3405 B | Control Valve | Valve | 1 | Control Valve | 3.4 | 0.00014 |
| 190 | 17-08-2023 | 19-UV-3406 | Control Valve | Valve | 2 | Control Valve | 50.2 | 0.00102 |
| 191 | 17-08-2023 | 19-PDV-3406 | Control Valve | Valve | 2 | Control Valve | 63.1 | 0.00121 |
| 192 | 17-08-2023 | 19-UV-3302 | Control Valve | Valve | 1 | Control Valve | 4.2 | 0.00016 |
| 193 | 17-08-2023 | 19-UV-3301 | Control Valve | Valve | 1 | Control Valve | 13.5 | 0.00038 |
| 194 | 17-08-2023 | 19-UV-3505 B | Control Valve | Valve | 1 | Control Valve | 60.2 | 0.00117 |
| 195 | 17-08-2023 | 19-UV-3506 A | Control Valve | Valve | 1 | Control Valve | 63.7 | 0.00122 |
| 196 | 17-08-2023 | 19-FV-3502 N | Control Valve | Valve | 1 | Control Valve | 89.7 | 0.00157 |
| 197 | 17-08-2023 | 19-UV-3504 | Control Valve | Valve | 1 | Control Valve | 8.4 | 0.00027 |
| 198 | 17-08-2023 | 19-UV-3503 | Control Valve | Valve | 2 | Control Valve | 50.1 | 0.00102 |
| 199 | 17-08-2023 | 19-FV-3403 N | Control Valve | Valve | 4 | Control Valve | 26.5 | 0.00063 |
| 200 | 17-08-2023 | 20-PV-3802 | Control Valve | Valve | 1 | Control Valve | 36.4 | 0.00080 |
| 201 | 17-08-2023 | 20-UV-3503 | Control Valve | Valve | 2 | Control Valve | 20.8 | 0.00053 |
| 202 | 17-08-2023 | 19-FV-2551 | Control Valve | Valve | 2 | Control Valve | 5575.0 | 0.03426 |
| 203 | 17-08-2023 | 20-UV-3802 B | Control Valve | Valve | 2 | Control Valve | 25.4 | 0.00061 |
| 204 | 17-08-2023 | 20-UV-3802 A | Control Valve | Valve | 2 | Control Valve | 93.1 | 0.00162 |
| 205 | 17-08-2023 | 20-UV-3501 | Control Valve | Valve | 2 | Control Valve | 20.7 | 0.00053 |
| 206 | 17-08-2023 | 20-UV-3702 | Control Valve | Valve | 16 | Control Valve | 48.6 | 0.00100 |
| 207 | 17-08-2023 | 20-HV-1801 N | Control Valve | Valve | 2 | Control Valve | 53.1 | 0.00106 |
| 208 | 17-08-2023 | 20-PDV-3705 | Control Valve | Valve | 2 | Control Valve | 122.5 | 0.00199 |
| 209 | 17-08-2023 | 20-UV-3702 B | Control Valve | Valve | 2 | Control Valve | 632.1 | 0.00675 |
| 210 | 17-08-2023 | 20-UV-3702 A | Control Valve | Valve | 1 | Control Valve | 40.1 | 0.00086 |
| 211 | 17-08-2023 | 20-PV-2605 | Control Valve | Valve | 1 | Control Valve | 25.8 | 0.00062 |
| 212 | 17-08-2023 | 20-UV-3602 B | Control Valve | Valve | 1 | Control Valve | 71.3 | 0.00133 |
| 213 | 17-08-2023 | 20-UV-3602 A | Control Valve | Valve | 6 | Control Valve | 89.4 | 0.00157 |
| 214 | 17-08-2023 | 20-FV-1801 | Control Valve | Valve | 2 | Control Valve | 26.3 | 0.00063 |
| 215 | 17-08-2023 | 19-PV-2701 N | Control Valve | Valve | 6 | Control Valve | 13.5 | 0.00038 |

# BHARAT PETROLEUM CORPORATION LIMITED, BINA-M.P.
## LDAR QUARTERLY REPORT FOR JULY 2023 TO SEPTEMBER 2023
### Monitoring - VOC Plant – MS BLOCK

| S.No. | Date | Tag. No. | Equipment | Component | Line size (inch) | Location | Screening Value sv (ppm) | Estimated Emission Rate kg/day |
|---|---|---|---|---|---|---|---|---|
| COMPONENT - VALVE | | | | | | | | |
| 216 | 17-08-2023 | 19-LV-2201 N | Control Valve | Valve | 4 | Control Valve | 40.2 | 0.00086 |
| 217 | 17-08-2023 | 19-LV-2701 | Control Valve | Valve | 2 | Control Valve | 63.9 | 0.00122 |
| 218 | 17-08-2023 | 19-LV-2201 | Control Valve | Valve | 6 | Control Valve | 83.1 | 0.00149 |
| 219 | 17-08-2023 | 19-HV-2201 | Control Valve | Valve | 4 | Control Valve | 24.5 | 0.00060 |
| 220 | 17-08-2023 | 19-PV-1601 B | Control Valve | Valve | 2 | Control Valve | 62.5 | 0.00120 |
| 221 | 17-08-2023 | 19-PV-1601 A | Control Valve | Valve | 6 | Control Valve | 70.2 | 0.00131 |
| 222 | 17-08-2023 | 15-XV-4311 | Control Valve | Valve | 4 | Control Valve | 80.1 | 0.00145 |
| 223 | 17-08-2023 | 15-XV-4318 | Control Valve | Valve | 6 | Control Valve | 463.2 | 0.00535 |
| 224 | 17-08-2023 | 15-XV-4310 | Control Valve | Valve | 8 | Control Valve | 215.3 | 0.00302 |
| 225 | 17-08-2023 | 15-XV-4317 | Control Valve | Valve | 4 | Control Valve | 63.5 | 0.00122 |
| 226 | 17-08-2023 | 15-XV-4312 | Control Valve | Valve | 6 | Control Valve | 5.4 | 0.00019 |
| 227 | 17-08-2023 | 15-XV-4316 | Control Valve | Valve | 2 | Control Valve | 2.8 | 0.00012 |
| 228 | 17-08-2023 | 15-XV-4308 | Control Valve | Valve | 1 | Control Valve | 72.1 | 0.00134 |
| 229 | 17-08-2023 | 15-XV-4307 | Control Valve | Valve | 1 | Control Valve | 46.8 | 0.00097 |
| 230 | 17-08-2023 | 15-XV-4301 | Control Valve | Valve | 8 | Control Valve | 91.2 | 0.00159 |
| 231 | 17-08-2023 | 15-XV-4302 | Control Valve | Valve | 3 | Control Valve | 43.2 | 0.00091 |
| 232 | 17-08-2023 | 15-XV-4303 | Control Valve | Valve | 2 | Control Valve | 16.2 | 0.00044 |
| 233 | 17-08-2023 | 15-XV-5302 | Control Valve | Valve | 4 | Control Valve | 34.5 | 0.00077 |
| 234 | 17-08-2023 | 15-XV-2302 | Control Valve | Valve | 4 | Control Valve | 80.1 | 0.00145 |
| 235 | 17-08-2023 | 15-XV-2307 | Control Valve | Valve | 6 | Control Valve | 26.4 | 0.00063 |
| 236 | 17-08-2023 | 15-XV-2303 | Control Valve | Valve | 6 | Control Valve | 8.1 | 0.00026 |
| 237 | 17-08-2023 | 15-XV-2308 | Control Valve | Valve | 8 | Control Valve | 36.4 | 0.00080 |
| 238 | 17-08-2023 | 15-XV-2301 | Control Valve | Valve | 6 | Control Valve | 90.2 | 0.00158 |
| 239 | 17-08-2023 | 15-XV-2309 | Control Valve | Valve | 4 | Control Valve | 36.2 | 0.00080 |
| 240 | 17-08-2023 | 15-XV-2018 | Control Valve | Valve | 1 | Control Valve | 6.7 | 0.00023 |
| 241 | 17-08-2023 | 15-XV-2008 | Control Valve | Valve | 1 | Control Valve | 80.9 | 0.00146 |
| 242 | 17-08-2023 | 15-XV-2003 | Control Valve | Valve | 1 | Control Valve | 64.2 | 0.00123 |
| 243 | 17-08-2023 | 15-XV-2001 | Control Valve | Valve | 1 | Control Valve | 13.5 | 0.00038 |
| 244 | 17-08-2023 | 15-XV-2005 | Control Valve | Valve | 6 | Control Valve | 6.4 | 0.00022 |
| 245 | 17-08-2023 | 15-XV-2002 | Control Valve | Valve | 8 | Control Valve | 80.2 | 0.00145 |
| 246 | 17-08-2023 | 15-XV-2007 | Control Valve | Valve | 8 | Control Valve | 36.9 | 0.00081 |
| 247 | 17-08-2023 | 15-XV-2010 | Control Valve | Valve | 8 | Control Valve | 99.8 | 0.00170 |
| 248 | 17-08-2023 | 15-XV-2017 | Control Valve | Valve | 8 | Control Valve | 64.2 | 0.00123 |
| 249 | 17-08-2023 | 15-XV-2011 | Control Valve | Valve | 8 | Control Valve | 13.5 | 0.00038 |
| 250 | 17-08-2023 | 15-XV-2009 | Control Valve | Valve | 8 | Control Valve | 50.1 | 0.00102 |
| 251 | 17-08-2023 | 15-XV-2015 | Control Valve | Valve | 6 | Control Valve | 23.6 | 0.00058 |
| 252 | 17-08-2023 | 15-XV-2016 | Control Valve | Valve | 4 | Control Valve | 9.4 | 0.00029 |
| 253 | 17-08-2023 | 15-XV-2318 | Control Valve | Valve | 4 | Control Valve | 73.6 | 0.00136 |
| 254 | 17-08-2023 | 15-XV-2310 | Control Valve | Valve | 6 | Control Valve | 6.4 | 0.00022 |
| 255 | 17-08-2023 | 15-XV-2317 | Control Valve | Valve | 6 | Control Valve | 3.5 | 0.00014 |
| 256 | 17-08-2023 | 15-XV-2312 | Control Valve | Valve | 6 | Control Valve | 156.4 | 0.00238 |
| 257 | 17-08-2023 | 15-XV-2316 | Control Valve | Valve | 4 | Control Valve | 6.2 | 0.00021 |
| 258 | 17-08-2023 | 15-XV-2311 | Control Valve | Valve | 6 | Control Valve | 36.5 | 0.00080 |

# BHARAT PETROLEUM CORPORATION LIMITED, BINA-M.P.
## LDAR QUARTERLY REPORT FOR JULY 2023 TO SEPTEMBER 2023
### Monitoring - VOC Plant – MS BLOCK

| S.No. | Date | Tag. No. | Equipment | Component | Line size (inch) | Location | Screening Value sv (ppm) | Estimated Emission Rate kg/day |
|---|---|---|---|---|---|---|---|---|
| COMPONENT - VALVE | | | | | | | | |
| 259 | 17-08-2023 | 15-XV-4342 | Control Valve | Valve | 4 | Control Valve | 2.1 | 0.00010 |
| 260 | 17-08-2023 | 15-XV-4341 | Control Valve | Valve | 2 | Control Valve | 23.5 | 0.00058 |
| 261 | 17-08-2023 | 15-XV-4340 | Control Valve | Valve | 2 | Control Valve | 63.5 | 0.00122 |
| 262 | 17-08-2023 | 15-XV-4337 | Control Valve | Valve | 3 | Control Valve | 8.2 | 0.00026 |
| 263 | 17-08-2023 | 15-XV-4338 | Control Valve | Valve | 2 | Control Valve | 13.6 | 0.00039 |
| 264 | 17-08-2023 | 15-XV-4339 | Control Valve | Valve | 1 | Control Valve | 5.5 | 0.00020 |
| 265 | 17-08-2023 | 15-XV-4334 | Control Valve | Valve | 4 | Control Valve | 46.2 | 0.00096 |
| 266 | 17-08-2023 | 15-XV-2304 | Control Valve | Valve | 3 | Control Valve | 36.5 | 0.00080 |
| 267 | 17-08-2023 | 15-XV-2330 | Control Valve | Valve | 3 | Control Valve | 83.6 | 0.00149 |
| 268 | 17-08-2023 | 15-XV-2327 | Control Valve | Valve | 4 | Control Valve | 91.4 | 0.00160 |
| 269 | 17-08-2023 | 15-XV-2313 | Control Valve | Valve | 8 | Control Valve | 23.5 | 0.00058 |
| 270 | 17-08-2023 | 15-XV-4334 | Control Valve | Valve | 8 | Control Valve | 61.2 | 0.00118 |
| 271 | 17-08-2023 | 15-XV-4335 | Control Valve | Valve | 6 | Control Valve | 36.5 | 0.00080 |
| 272 | 17-08-2023 | 15-XV-4336 | Control Valve | Valve | 4 | Control Valve | 80.6 | 0.00145 |
| 273 | 17-08-2023 | 15-XV-4351 | Control Valve | Valve | 2 | Control Valve | 13.2 | 0.00038 |
| 274 | 17-08-2023 | 15-XV-4305 | Control Valve | Valve | 2 | Control Valve | 80.4 | 0.00145 |
| 275 | 17-08-2023 | 15-XV-4306 | Control Valve | Valve | 3 | Control Valve | 23.6 | 0.00058 |
| 276 | 17-08-2023 | 15-XV-4304 | Control Valve | Valve | 3 | Control Valve | 55.4 | 0.00110 |
| 277 | 17-08-2023 | 15-XV-4331 | Control Valve | Valve | 1 | Control Valve | 156.8 | 0.00239 |
| 278 | 17-08-2023 | 15-XV-4330 | Control Valve | Valve | 1 | Control Valve | 93.1 | 0.00162 |
| 279 | 17-08-2023 | 15-XV-4332 | Control Valve | Valve | 1 | Control Valve | 25.4 | 0.00061 |
| 280 | 17-08-2023 | 15-XV-4327 | Control Valve | Valve | 1 | Control Valve | 62.1 | 0.00120 |
| 281 | 17-08-2023 | 15-XV-4326 | Control Valve | Valve | 2 | Control Valve | 23.8 | 0.00058 |
| 282 | 17-08-2023 | 15-XV-4328 | Control Valve | Valve | 2 | Control Valve | 93.1 | 0.00162 |
| 283 | 17-08-2023 | 15-XV-4314 | Control Valve | Valve | 2 | Control Valve | 24.5 | 0.00060 |
| 284 | 17-08-2023 | 15-XV-4315 | Control Valve | Valve | 2 | Control Valve | 153.4 | 0.00235 |
| 285 | 17-08-2023 | 15-XV-4313 | Control Valve | Valve | 2 | Control Valve | 618.5 | 0.00664 |
| 286 | 17-08-2023 | 15-XV-4324 | Control Valve | Valve | 4 | Control Valve | 9.5 | 0.00029 |
| 287 | 17-08-2023 | 15-XV-4323 | Control Valve | Valve | 6 | Control Valve | 40.6 | 0.00087 |
| 288 | 17-08-2023 | 15-XV-4325 | Control Valve | Valve | 6 | Control Valve | 80.2 | 0.00145 |
| 289 | 17-08-2023 | 15-XV-4346 | Control Valve | Valve | 4 | Control Valve | 36.1 | 0.00080 |
| 290 | 17-08-2023 | 15-XV-4320 | Control Valve | Valve | 4 | Control Valve | 49.8 | 0.00101 |
| 291 | 17-08-2023 | 15-XV-4321 | Control Valve | Valve | 8 | Control Valve | 36.3 | 0.00080 |
| 292 | 17-08-2023 | 15-XV-4322 | Control Valve | Valve | 8 | Control Valve | 93.4 | 0.00162 |
| 293 | 17-08-2023 | 15-XV-4319 | Control Valve | Valve | 4 | Control Valve | 250.6 | 0.00339 |
| 294 | 17-08-2023 | 15-XV-2322 | Control Valve | Valve | 6 | Control Valve | 36.5 | 0.00080 |
| 295 | 17-08-2023 | 15-XV-2324 | Control Valve | Valve | 2 | Control Valve | 3.1 | 0.00013 |
| 296 | 17-08-2023 | 15-XV-2320 | Control Valve | Valve | 4 | Control Valve | 2.6 | 0.00011 |
| 297 | 17-08-2023 | 15-XV-2321 | Control Valve | Valve | 3 | Control Valve | 614.2 | 0.00661 |
| **Total VOC Emission from Valves** | | | | | | | | **0.48642** |

# BHARAT PETROLEUM CORPORATION LIMITED, BINA-M.P.
## LDAR QUARTERLY REPORT FOR JULY 2023 TO SEPTEMBER 2023
### Monitoring - VOC Plant – MS BLOCK

| S.No. | Date | Tag. No. | Equipment | Component | Line size (inch) | Location | Screening Value sv (ppm) | Estimated Emission Rate kg/day |
|---|---|---|---|---|---|---|---|---|
| COMPONENT - PSV | | | | | | | | |
| 1 | 18-08-2023 | 20-PSV-3103 A | PSV | Flange | 6 | Inlet | 56.3 | 0.00188 |
| | 18-08-2023 | 20-PSV-3103 A | PSV | Flange | 6 | Outlet | 20.1 | 0.00091 |
| 2 | 18-08-2023 | 20-PSV-3103 B | PSV | Flange | 6 | Inlet | 79.8 | 0.00240 |
| | 18-08-2023 | 20-PSV-3103 B | PSV | Flange | 6 | Outlet | 156.4 | 0.00386 |
| 3 | 18-08-2023 | 20-PSV-1802 A | PSV | Flange | 4 | Inlet | 23.2 | 0.00101 |
| | 18-08-2023 | 20-PSV-1802 A | PSV | Flange | 4 | Outlet | 30.6 | 0.00123 |
| 4 | 18-08-2023 | 20-PSV-1802 B | PSV | Flange | 6 | Inlet | 80.4 | 0.00242 |
| | 18-08-2023 | 20-PSV-1802 B | PSV | Flange | 6 | Outlet | 189.6 | 0.00442 |
| 5 | 18-08-2023 | 20-PSV-3501 | PSV | Flange | 4 | Inlet | 36.2 | 0.00138 |
| | 18-08-2023 | 20-PSV-3501 | PSV | Flange | 4 | Outlet | 20.6 | 0.00093 |
| 6 | 18-08-2023 | 19-PSV-2501 | PSV | Flange | 4 | Inlet | 36.5 | 0.00139 |
| | 18-08-2023 | 19-PSV-2501 | PSV | Flange | 4 | Outlet | 43.1 | 0.00156 |
| 7 | 18-08-2023 | 19-PSV-2502 | PSV | Flange | 2 | Inlet | 20.5 | 0.00092 |
| | 18-08-2023 | 19-PSV-2502 | PSV | Flange | 2 | Outlet | 89.4 | 0.00260 |
| 8 | 18-08-2023 | 19-PSV-2602 | PSV | Flange | 6 | Inlet | 563.2 | 0.00950 |
| | 18-08-2023 | 19-PSV-2602 | PSV | Flange | 6 | Outlet | 50.1 | 0.00173 |
| 9 | 18-08-2023 | 19-PSV-2501 | PSV | Flange | 4 | Inlet | 36.6 | 0.00139 |
| | 18-08-2023 | 19-PSV-2501 | PSV | Flange | 4 | Outlet | 71.4 | 0.00222 |
| 10 | 18-08-2023 | 19-PSV-1601 A | PSV | Flange | 4 | Inlet | 56.2 | 0.00188 |
| | 18-08-2023 | 19-PSV-1601 A | PSV | Flange | 4 | Outlet | 89.6 | 0.00261 |
| 11 | 18-08-2023 | 19-PSV-1601 B | PSV | Flange | 4 | Inlet | 20.3 | 0.00092 |
| | 18-08-2023 | 19-PSV-1601 B | PSV | Flange | 4 | Outlet | 6.5 | 0.00041 |
| 12 | 18-08-2023 | 19-PSV-2701 | PSV | Flange | 4 | Inlet | 23.5 | 0.00102 |
| | 18-08-2023 | 19-PSV-2701 | PSV | Flange | 4 | Outlet | 189.6 | 0.00442 |
| 13 | 18-08-2023 | 19-PSV-2702 | PSV | Flange | 4 | Inlet | 36.5 | 0.00139 |
| | 18-08-2023 | 19-PSV-2702 | PSV | Flange | 4 | Outlet | 20.1 | 0.00091 |
| 14 | 18-08-2023 | 15-PSV-2601 A | PSV | Flange | 6 | Inlet | 46.5 | 0.00164 |
| | 18-08-2023 | 15-PSV-2601 A | PSV | Flange | 6 | Outlet | 36.2 | 0.00138 |
| 15 | 18-08-2023 | 15-PSV-2601 B | PSV | Flange | 6 | Inlet | 56.4 | 0.00188 |
| | 18-08-2023 | 15-PSV-2601 B | PSV | Flange | 6 | Outlet | 133.6 | 0.00345 |
| 16 | 18-08-2023 | 20-PSV-2801 | PSV | Flange | 6 | Inlet | 80.6 | 0.00242 |
| | 18-08-2023 | 20-PSV-2801 | PSV | Flange | 6 | Outlet | 35.4 | 0.00136 |
| 17 | 18-08-2023 | 20-PSV-2802 | PSV | Flange | 6 | Inlet | 89.4 | 0.00260 |
| | 18-08-2023 | 20-PSV-2802 | PSV | Flange | 6 | Outlet | 26.5 | 0.00111 |
| 18 | 18-08-2023 | 15-PSV-2101 A | PSV | Flange | 6 | Inlet | 30.6 | 0.00123 |
| | 18-08-2023 | 15-PSV-2101 A | PSV | Flange | 6 | Outlet | 43.2 | 0.00156 |
| 19 | 18-08-2023 | 15-PSV-2102 B | PSV | Flange | 6 | Inlet | 63.2 | 0.00204 |
| | 18-08-2023 | 15-PSV-2102 B | PSV | Flange | 6 | Outlet | 166.6 | 0.00403 |
| 20 | 18-08-2023 | 15-PSV-2404 | PSV | Flange | 4 | Inlet | 315.6 | 0.00632 |
| | 18-08-2023 | 15-PSV-2404 | PSV | Flange | 4 | Outlet | 93.1 | 0.00268 |
| 21 | 18-08-2023 | 15-PSV-4302 | PSV | Flange | 2 | Inlet | 20.4 | 0.00092 |
| | 18-08-2023 | 15-PSV-4302 | PSV | Flange | 2 | Outlet | 79.2 | 0.00239 |
| 22 | 18-08-2023 | 15-PSV-4301 | PSV | Flange | 2 | Inlet | 53.4 | 0.00181 |
| | 18-08-2023 | 15-PSV-4301 | PSV | Flange | 2 | Outlet | 166.3 | 0.00403 |

# BHARAT PETROLEUM CORPORATION LIMITED, BINA-M.P.
## LDAR QUARTERLY REPORT FOR JULY 2023 TO SEPTEMBER 2023
### Monitoring - VOC Plant – MS BLOCK

| S.No. | Date | Tag. No. | Equipment | Component | Line size (inch) | Location | Screening Value sv (ppm) | Estimated Emission Rate kg/day |
|---|---|---|---|---|---|---|---|---|
| COMPONENT - PSV | | | | | | | | |
| 23 | 18-08-2023 | 15-PSV-4201 | PSV | Flange | 2 | Inlet | 20.5 | 0.00092 |
| | 18-08-2023 | 15-PSV-4201 | PSV | Flange | 2 | Outlet | 23.6 | 0.00102 |
| 24 | 18-08-2023 | 15-PSV-2107 B | PSV | Flange | 6 | Inlet | 80.6 | 0.00242 |
| | 18-08-2023 | 15-PSV-2107 B | PSV | Flange | 6 | Outlet | 36.5 | 0.00139 |
| 25 | 18-08-2023 | 15-PSV-2301 A | PSV | Flange | 6 | Inlet | 78.1 | 0.00237 |
| | 18-08-2023 | 15-PSV-2301 A | PSV | Flange | 6 | Outlet | 5.5 | 0.00037 |
| 26 | 18-08-2023 | 15-PSV-2301 B | PSV | Flange | 4 | Inlet | 964.2 | 0.01386 |
| | 18-08-2023 | 15-PSV-2301 B | PSV | Flange | 4 | Outlet | 36.5 | 0.00139 |
| 27 | 18-08-2023 | 15-PSV-2001 | PSV | Flange | 2 | Inlet | 13.2 | 0.00068 |
| | 18-08-2023 | 15-PSV-2001 | PSV | Flange | 2 | Outlet | 50.2 | 0.00174 |
| 28 | 18-08-2023 | 15-PSV-2002 | PSV | Flange | 2 | Inlet | 63.1 | 0.00204 |
| | 18-08-2023 | 15-PSV-2002 | PSV | Flange | 2 | Outlet | 43.5 | 0.00157 |
| 29 | 18-08-2023 | 15-PSV-2201 | PSV | Flange | 2 | Inlet | 62.5 | 0.00202 |
| | 18-08-2023 | 15-PSV-2201 | PSV | Flange | 2 | Outlet | 73.4 | 0.00227 |
| 30 | 18-08-2023 | 15-PSV-2803 | PSV | Flange | 6 | Inlet | 63.1 | 0.00204 |
| | 18-08-2023 | 15-PSV-2803 | PSV | Flange | 6 | Outlet | 546.2 | 0.00930 |
| 31 | 18-08-2023 | 15-PSV-2801 A | PSV | Flange | 6 | Inlet | 9.6 | 0.00054 |
| | 18-08-2023 | 15-PSV-2801 A | PSV | Flange | 6 | Outlet | 25.2 | 0.00107 |
| 32 | 18-08-2023 | 15-PSV-2801 B | PSV | Flange | 4 | Inlet | 13.5 | 0.00069 |
| | 18-08-2023 | 15-PSV-2801 B | PSV | Flange | 4 | Outlet | 114.5 | 0.00310 |
| 33 | 18-08-2023 | 15-PSV-2701 | PSV | Flange | 2 | Inlet | 6.2 | 0.00040 |
| | 18-08-2023 | 15-PSV-2701 | PSV | Flange | 2 | Outlet | 35.2 | 0.00135 |
| 34 | 18-08-2023 | 15-PSV-8001 A | PSV | Flange | 2 | Inlet | 89.6 | 0.00261 |
| | 18-08-2023 | 15-PSV-8001 A | PSV | Flange | 2 | Outlet | 46.5 | 0.00164 |
| 35 | 18-08-2023 | 15-PSV-8001 B | PSV | Flange | 4 | Inlet | 80.6 | 0.00242 |
| | 18-08-2023 | 15-PSV-8001 B | PSV | Flange | 4 | Outlet | 24.3 | 0.00104 |
| 36 | 18-08-2023 | 15-PSV-4003 | PSV | Flange | 4 | Inlet | 66.4 | 0.00211 |
| | 18-08-2023 | 15-PSV-4003 | PSV | Flange | 4 | Outlet | 846.2 | 0.01265 |
| 37 | 18-08-2023 | 15-PSV-1601 B | PSV | Flange | 4 | Inlet | 69.3 | 0.00218 |
| | 18-08-2023 | 15-PSV-1601 B | PSV | Flange | 4 | Outlet | 12.5 | 0.00065 |
| 38 | 18-08-2023 | 15-PSV-1601 A | PSV | Flange | 4 | Inlet | 63.4 | 0.00205 |
| | 18-08-2023 | 15-PSV-1601 A | PSV | Flange | 4 | Outlet | 89.5 | 0.00261 |
| 39 | 18-08-2023 | 15-PSV-4001 B | PSV | Flange | 4 | Inlet | 613.2 | 0.01008 |
| | 18-08-2023 | 15-PSV-4001 B | PSV | Flange | 4 | Outlet | 8.6 | 0.00050 |
| 40 | 18-08-2023 | 15-PSV-4001 A | PSV | Flange | 2 | Inlet | 43.9 | 0.00158 |
| | 18-08-2023 | 15-PSV-4001 A | PSV | Flange | 2 | Outlet | 64.8 | 0.00208 |
| 41 | 18-08-2023 | 15-PSV-4101 | PSV | Flange | 4 | Inlet | 73.6 | 0.00227 |
| | 18-08-2023 | 15-PSV-4101 | PSV | Flange | 4 | Outlet | 31.4 | 0.00125 |
| 42 | 18-08-2023 | 15-PSV-1502 | PSV | Flange | 4 | Inlet | 60.2 | 0.00197 |
| | 18-08-2023 | 15-PSV-1502 | PSV | Flange | 4 | Outlet | 36.6 | 0.00139 |
| 43 | 18-08-2023 | 15-PSV-1501 | PSV | Flange | 6 | Inlet | 80.6 | 0.00242 |
| | 18-08-2023 | 15-PSV-1501 | PSV | Flange | 6 | Outlet | 33.9 | 0.00132 |
| 44 | 18-08-2023 | 15-PSV-4002 | PSV | Flange | 8 | Inlet | 147.5 | 0.00370 |
| | 18-08-2023 | 15-PSV-4002 | PSV | Flange | 8 | Outlet | 26.6 | 0.00111 |

# BHARAT PETROLEUM CORPORATION LIMITED, BINA-M.P.
## LDAR QUARTERLY REPORT FOR JULY 2023 TO SEPTEMBER 2023
### Monitoring - VOC Plant – MS BLOCK

| S.No. | Date | Tag. No. | Equipment | Component | Line size (inch) | Location | Screening Value sv (ppm) | Estimated Emission Rate kg/day |
|---|---|---|---|---|---|---|---|---|
| COMPONENT - PSV | | | | | | | | |
| 45 | 18-08-2023 | 15-PSV-4501 | PSV | Flange | 4 | Inlet | 93.2 | 0.00268 |
| | 18-08-2023 | 15-PSV-4501 | PSV | Flange | 4 | Outlet | 30.6 | 0.00123 |
| 46 | 18-08-2023 | 15-PSV-7301 | PSV | Flange | 2 | Inlet | 66.8 | 0.00212 |
| | 18-08-2023 | 15-PSV-7301 | PSV | Flange | 2 | Outlet | 35.6 | 0.00136 |
| 47 | 18-08-2023 | 15-PSV-8501 | PSV | Flange | 3 | Inlet | 96.3 | 0.00274 |
| | 18-08-2023 | 15-PSV-8501 | PSV | Flange | 3 | Outlet | 26.5 | 0.00111 |
| 48 | 18-08-2023 | 15-PSV-3601 | PSV | Flange | 6 | Inlet | 13.8 | 0.00070 |
| | 18-08-2023 | 15-PSV-3601 | PSV | Flange | 6 | Outlet | 96.3 | 0.00274 |
| 49 | 18-08-2023 | 15-PSV-3502 | PSV | Flange | 4 | Inlet | 155.6 | 0.00384 |
| | 18-08-2023 | 15-PSV-3502 | PSV | Flange | 4 | Outlet | 80.3 | 0.00242 |
| 50 | 18-08-2023 | 15-PSV-2902 | PSV | Flange | 3 | Inlet | 62.1 | 0.00202 |
| | 18-08-2023 | 15-PSV-2902 | PSV | Flange | 3 | Outlet | 13.6 | 0.00069 |
| 51 | 18-08-2023 | 15-PSV-4601 B | PSV | Flange | 2 | Inlet | 93.5 | 0.00269 |
| | 18-08-2023 | 15-PSV-4601 B | PSV | Flange | 2 | Outlet | 689.3 | 0.01095 |
| 52 | 18-08-2023 | 15-PSV-4601 A | PSV | Flange | 8 | Inlet | 2.6 | 0.00022 |
| | 18-08-2023 | 15-PSV-4601 A | PSV | Flange | 8 | Outlet | 53.1 | 0.00181 |
| 53 | 18-08-2023 | 15-PSV-4604 | PSV | Flange | 10 | Inlet | 146.2 | 0.00368 |
| | 18-08-2023 | 15-PSV-4604 | PSV | Flange | 10 | Outlet | 36.5 | 0.00139 |
| 54 | 18-08-2023 | 15-PSV-4603 | PSV | Flange | 8 | Inlet | 20.3 | 0.00092 |
| | 18-08-2023 | 15-PSV-4603 | PSV | Flange | 8 | Outlet | 6.3 | 0.00040 |
| 55 | 18-08-2023 | 15-PSV-4602 | PSV | Flange | 6 | Inlet | 48.9 | 0.00170 |
| | 18-08-2023 | 15-PSV-4602 | PSV | Flange | 6 | Outlet | 68.5 | 0.00216 |
| 56 | 18-08-2023 | 15-PSV-1503 | PSV | Flange | 8 | Inlet | 89.2 | 0.00260 |
| | 18-08-2023 | 15-PSV-1503 | PSV | Flange | 8 | Outlet | 14.6 | 0.00073 |
| 57 | 18-08-2023 | 15-PSV-1502 | PSV | Flange | 6 | Inlet | 35.2 | 0.00135 |
| | 18-08-2023 | 15-PSV-1502 | PSV | Flange | 6 | Outlet | 846.2 | 0.01265 |
| 58 | 18-08-2023 | 15-PSV-3101 A | PSV | Flange | 10 | Inlet | 36.5 | 0.00139 |
| | 18-08-2023 | 15-PSV-3101 A | PSV | Flange | 10 | Outlet | 2.2 | 0.00019 |
| 59 | 18-08-2023 | 15-PSV-3101 B | PSV | Flange | 4 | Inlet | 61.4 | 0.00200 |
| | 18-08-2023 | 15-PSV-3101 B | PSV | Flange | 4 | Outlet | 133.6 | 0.00345 |
| 60 | 18-08-2023 | 15-PSV-3701 | PSV | Flange | 3 | Inlet | 5.6 | 0.00037 |
| | 18-08-2023 | 15-PSV-3701 | PSV | Flange | 3 | Outlet | 9.3 | 0.00053 |
| 61 | 18-08-2023 | 20-PSV-3007 | PSV | Flange | 4 | Inlet | 46.2 | 0.00164 |
| | 18-08-2023 | 20-PSV-3007 | PSV | Flange | 4 | Outlet | 36.5 | 0.00139 |
| 62 | 18-08-2023 | 15-PSV-2902 | PSV | Flange | 6 | Inlet | 80.6 | 0.00242 |
| | 18-08-2023 | 15-PSV-2902 | PSV | Flange | 6 | Outlet | 46.2 | 0.00164 |
| 63 | 18-08-2023 | 15-PSV-2901 | PSV | Flange | 2 | Inlet | 13.5 | 0.00069 |
| | 18-08-2023 | 15-PSV-2901 | PSV | Flange | 2 | Outlet | 99.5 | 0.00281 |
| 64 | 18-08-2023 | 15-PSV-2501 B | PSV | Flange | 4 | Inlet | 62.2 | 0.00202 |
| | 18-08-2023 | 15-PSV-2501 B | PSV | Flange | 4 | Outlet | 166.5 | 0.00403 |
| 65 | 18-08-2023 | 15-PSV-2501 A | PSV | Flange | 6 | Inlet | 34.2 | 0.00133 |
| | 18-08-2023 | 15-PSV-2501 A | PSV | Flange | 6 | Outlet | 15.8 | 0.00077 |
| 66 | 18-08-2023 | 25-PSV-1701 A | PSV | Flange | 6 | Inlet | 93.1 | 0.00268 |
| | 18-08-2023 | 25-PSV-1701 A | PSV | Flange | 6 | Outlet | 40.5 | 0.00149 |

# BHARAT PETROLEUM CORPORATION LIMITED, BINA-M.P.
## LDAR QUARTERLY REPORT FOR JULY 2023 TO SEPTEMBER 2023
### Monitoring - VOC Plant – MS BLOCK

| S.No. | Date | Tag. No. | Equipment | Component | Line size (inch) | Location | Screening Value sv (ppm) | Estimated Emission Rate kg/day |
|---|---|---|---|---|---|---|---|---|
| COMPONENT - PSV | | | | | | | | |
| 67 | 18-08-2023 | 25-PSV-1701 B | PSV | Flange | 4 | Inlet | 26.1 | 0.00110 |
| | 18-08-2023 | 25-PSV-1701 B | PSV | Flange | 4 | Outlet | 23.1 | 0.00101 |
| 68 | 18-08-2023 | 25-PSV-1901 | PSV | Flange | 10 | Inlet | 77.6 | 0.00236 |
| | 18-08-2023 | 25-PSV-1901 | PSV | Flange | 10 | Outlet | 5.6 | 0.00037 |
| 69 | 18-08-2023 | 25-PSV-1801 B | PSV | Flange | 12 | Inlet | 23.1 | 0.00101 |
| | 18-08-2023 | 25-PSV-1801 B | PSV | Flange | 12 | Outlet | 176.5 | 0.00420 |
| 70 | 18-08-2023 | 25-PSV-1801 A | PSV | Flange | 6 | Inlet | 5.2 | 0.00035 |
| | 18-08-2023 | 25-PSV-1801 A | PSV | Flange | 6 | Outlet | 36.1 | 0.00138 |
| 71 | 18-08-2023 | 25-PSV-1805 A | PSV | Flange | 8 | Inlet | 16.6 | 0.00080 |
| | 18-08-2023 | 25-PSV-1805 A | PSV | Flange | 8 | Outlet | 3.1 | 0.00025 |
| 72 | 18-08-2023 | 25-PSV-1805 B | PSV | Flange | 2 | Inlet | 20.2 | 0.00092 |
| | 18-08-2023 | 25-PSV-1805 B | PSV | Flange | 2 | Outlet | 7.4 | 0.00045 |
| 73 | 18-08-2023 | 25-PSV-1310 | PSV | Flange | 4 | Inlet | 15.2 | 0.00075 |
| | 18-08-2023 | 25-PSV-1310 | PSV | Flange | 4 | Outlet | 63.2 | 0.00204 |
| 74 | 18-08-2023 | 25-PSV-1501 | PSV | Flange | 4 | Inlet | 15.2 | 0.00075 |
| | 18-08-2023 | 25-PSV-1501 | PSV | Flange | 4 | Outlet | 983.4 | 0.01405 |
| 75 | 18-08-2023 | 25-PSV-1904 | PSV | Flange | 6 | Inlet | 2.6 | 0.00022 |
| | 18-08-2023 | 25-PSV-1904 | PSV | Flange | 6 | Outlet | 35.1 | 0.00135 |
| 76 | 18-08-2023 | 25-PSV-1402 | PSV | Flange | 3 | Inlet | 156.3 | 0.00386 |
| | 18-08-2023 | 25-PSV-1402 | PSV | Flange | 3 | Outlet | 25.2 | 0.00107 |
| 77 | 18-08-2023 | 25-PSV-1903 | PSV | Flange | 2 | Inlet | 30.6 | 0.00123 |
| | 18-08-2023 | 25-PSV-1903 | PSV | Flange | 2 | Outlet | 46.2 | 0.00164 |
| 78 | 18-08-2023 | 19-PSV-2001 A | PSV | Flange | 8 | Inlet | 13.5 | 0.00069 |
| | 18-08-2023 | 19-PSV-2001 A | PSV | Flange | 8 | Outlet | 48.6 | 0.00170 |
| 79 | 18-08-2023 | 19-PSV-2001 B | PSV | Flange | 6 | Inlet | 93.4 | 0.00269 |
| | 18-08-2023 | 19-PSV-2001 B | PSV | Flange | 6 | Outlet | 52.1 | 0.00178 |
| 80 | 18-08-2023 | 20-PSV-2101 | PSV | Flange | 4 | Inlet | 30.6 | 0.00123 |
| | 18-08-2023 | 20-PSV-2101 | PSV | Flange | 4 | Outlet | 83.4 | 0.00248 |
| 81 | 18-08-2023 | 20-PSV-2401 | PSV | Flange | 6 | Inlet | 156.9 | 0.00387 |
| | 18-08-2023 | 20-PSV-2401 | PSV | Flange | 6 | Outlet | 86.4 | 0.00254 |
| 82 | 18-08-2023 | 20-PSV-2402 | PSV | Flange | 8 | Inlet | 23.6 | 0.00102 |
| | 18-08-2023 | 20-PSV-2402 | PSV | Flange | 8 | Outlet | 50.1 | 0.00173 |
| 83 | 18-08-2023 | 20-PSV-2302 B | PSV | Flange | 2 | Inlet | 663.2 | 0.01065 |
| | 18-08-2023 | 20-PSV-2302 B | PSV | Flange | 2 | Outlet | 80.1 | 0.00241 |
| 84 | 18-08-2023 | 20-PSV-2302 A | PSV | Flange | 3 | Inlet | 46.9 | 0.00165 |
| | 18-08-2023 | 20-PSV-2302 A | PSV | Flange | 3 | Outlet | 20.8 | 0.00093 |
| 85 | 18-08-2023 | 20-PSV-2602 A | PSV | Flange | 4 | Inlet | 93.1 | 0.00268 |
| | 18-08-2023 | 20-PSV-2602 A | PSV | Flange | 4 | Outlet | 20.4 | 0.00092 |
| 86 | 18-08-2023 | 20-PSV-2602 B | PSV | Flange | 6 | Inlet | 89.2 | 0.00260 |
| | 18-08-2023 | 20-PSV-2602 B | PSV | Flange | 6 | Outlet | 546.3 | 0.00930 |
| 87 | 18-08-2023 | 20-PSV-2702 A | PSV | Flange | 6 | Inlet | 214.3 | 0.00482 |
| | 18-08-2023 | 20-PSV-2702 A | PSV | Flange | 6 | Outlet | 6.2 | 0.00040 |

# BHARAT PETROLEUM CORPORATION LIMITED, BINA-M.P.
## LDAR QUARTERLY REPORT FOR JULY 2023 TO SEPTEMBER 2023
### Monitoring - VOC Plant – MS BLOCK

| S.No. | Date | Tag. No. | Equipment | Component | Line size (inch) | Location | Screening Value sv (ppm) | Estimated Emission Rate kg/day |
|---|---|---|---|---|---|---|---|---|
| COMPONENT - PSV | | | | | | | | |
| 88 | 18-08-2023 | 20-PSV-2702 B | PSV | Flange | 8 | Inlet | 30.2 | 0.00121 |
| | 18-08-2023 | 20-PSV-2702 B | PSV | Flange | 8 | Outlet | 6.5 | 0.00041 |
| 89 | 18-08-2023 | 15-PSV-2402 | PSV | Flange | 6 | Inlet | 13.2 | 0.00068 |
| | 18-08-2023 | 15-PSV-2402 | PSV | Flange | 6 | Outlet | 93.1 | 0.00268 |
| 90 | 18-08-2023 | 20-PSV-2501 | PSV | Flange | 4 | Inlet | 50.4 | 0.00174 |
| | 18-08-2023 | 20-PSV-2501 | PSV | Flange | 4 | Outlet | 46.2 | 0.00164 |
| 91 | 18-08-2023 | 20-PSV-2802 | PSV | Flange | 2 | Inlet | 20.1 | 0.00091 |
| | 18-08-2023 | 20-PSV-2802 | PSV | Flange | 2 | Outlet | 6.9 | 0.00043 |
| 92 | 18-08-2023 | 19-PSV-2402 | PSV | Flange | 4 | Inlet | 86.1 | 0.00254 |
| | 18-08-2023 | 19-PSV-2402 | PSV | Flange | 4 | Outlet | 23.8 | 0.00103 |
| 93 | 18-08-2023 | 15-PSV-1802 B | PSV | Flange | 6 | Inlet | 73.4 | 0.00227 |
| | 18-08-2023 | 15-PSV-1802 B | PSV | Flange | 6 | Outlet | 6.6 | 0.00042 |
| 94 | 18-08-2023 | 15-PSV-1801 A | PSV | Flange | 8 | Inlet | 35.2 | 0.00135 |
| | 18-08-2023 | 15-PSV-1801 A | PSV | Flange | 8 | Outlet | 122.3 | 0.00325 |
| 95 | 18-08-2023 | 15-PSV-2201 | PSV | Flange | 2 | Inlet | 63.5 | 0.00205 |
| | 18-08-2023 | 15-PSV-2201 | PSV | Flange | 2 | Outlet | 93.1 | 0.00268 |
| 96 | 18-08-2023 | 15-PSV-1501 | PSV | Flange | 6 | Inlet | 25.4 | 0.00108 |
| | 18-08-2023 | 15-PSV-1501 | PSV | Flange | 6 | Outlet | 56.3 | 0.00188 |
| 97 | 18-08-2023 | 15-PSV-1701 B | PSV | Flange | 8 | Inlet | 965.2 | 0.01387 |
| | 18-08-2023 | 15-PSV-1701 B | PSV | Flange | 8 | Outlet | 23.6 | 0.00102 |
| 98 | 18-08-2023 | 15-PSV-1701 A | PSV | Flange | 6 | Inlet | 6.5 | 0.00041 |
| | 18-08-2023 | 15-PSV-1701 A | PSV | Flange | 6 | Outlet | 5.1 | 0.00035 |
| 99 | 18-08-2023 | 19-PSV-1652 | PSV | Flange | 4 | Inlet | 23.6 | 0.00102 |
| | 18-08-2023 | 19-PSV-1652 | PSV | Flange | 4 | Outlet | 6.1 | 0.00039 |
| 100 | 18-08-2023 | 19-PSV-1653 | PSV | Flange | 6 | Inlet | 20.3 | 0.00092 |
| | 18-08-2023 | 19-PSV-1653 | PSV | Flange | 6 | Outlet | 49.8 | 0.00173 |
| 101 | 18-08-2023 | 19-PSV-2151 A | PSV | Flange | 6 | Inlet | 6.2 | 0.00040 |
| | 18-08-2023 | 19-PSV-2151 A | PSV | Flange | 6 | Outlet | 3.1 | 0.00025 |
| 102 | 18-08-2023 | 19-PSV-2151 B | PSV | Flange | 4 | Inlet | 23.6 | 0.00102 |
| | 18-08-2023 | 19-PSV-2151 B | PSV | Flange | 4 | Outlet | 80.2 | 0.00241 |
| 103 | 18-08-2023 | 19-PSV-2751 A | PSV | Flange | 8 | Inlet | 6.3 | 0.00040 |
| | 18-08-2023 | 19-PSV-2751 A | PSV | Flange | 8 | Outlet | 145.6 | 0.00367 |
| 104 | 18-08-2023 | 19-PSV-2751 B | PSV | Flange | 8 | Inlet | 23.5 | 0.00102 |
| | 18-08-2023 | 19-PSV-2751 B | PSV | Flange | 8 | Outlet | 289.4 | 0.00595 |
| 105 | 18-08-2023 | 20-PSV-3251 | PSV | Flange | 4 | Inlet | 6.5 | 0.00041 |
| | 18-08-2023 | 20-PSV-3251 | PSV | Flange | 4 | Outlet | 3.1 | 0.00025 |
| 106 | 18-08-2023 | 15-PSV-3951 A | PSV | Flange | 8 | Inlet | 26.5 | 0.00111 |
| | 18-08-2023 | 15-PSV-3951 A | PSV | Flange | 8 | Outlet | 65.4 | 0.00209 |
| 107 | 18-08-2023 | 15-PSV-3951 B | PSV | Flange | 6 | Inlet | 23.6 | 0.00102 |
| | 18-08-2023 | 15-PSV-3951 B | PSV | Flange | 6 | Outlet | 122.6 | 0.00325 |
| 108 | 18-08-2023 | 15-PSV-2252 | PSV | Flange | 8 | Inlet | 93.4 | 0.00269 |
| | 18-08-2023 | 15-PSV-2252 | PSV | Flange | 8 | Outlet | 46.2 | 0.00164 |
| 109 | 18-08-2023 | 15-PSV-2251 | PSV | Flange | 10 | Inlet | 30.6 | 0.00123 |
| | 18-08-2023 | 15-PSV-2251 | PSV | Flange | 10 | Outlet | 144.5 | 0.00365 |

# BHARAT PETROLEUM CORPORATION LIMITED, BINA-M.P.
## LDAR QUARTERLY REPORT FOR JULY 2023 TO SEPTEMBER 2023
### Monitoring - VOC Plant – MS BLOCK

| S.No. | Date | Tag. No. | Equipment | Component | Line size (inch) | Location | Screening Value sv (ppm) | Estimated Emission Rate kg/day |
|---|---|---|---|---|---|---|---|---|
| COMPONENT - PSV | | | | | | | | |
| 110 | 18-08-2023 | 15-PSV-4651 B | PSV | Flange | 8 | Inlet | 846.2 | 0.01265 |
| | 18-08-2023 | 15-PSV-4651 B | PSV | Flange | 8 | Outlet | 36.4 | 0.00138 |
| 111 | 18-08-2023 | 15-PSV-4651 A | PSV | Flange | 4 | Inlet | 50.2 | 0.00174 |
| | 18-08-2023 | 15-PSV-4651 A | PSV | Flange | 4 | Outlet | 16.3 | 0.00079 |
| 112 | 18-08-2023 | 15-PSV-3952 | PSV | Flange | 6 | Inlet | 93.1 | 0.00268 |
| | 18-08-2023 | 15-PSV-3952 | PSV | Flange | 6 | Outlet | 176.2 | 0.00420 |
| 113 | 18-08-2023 | 15-PSV-2751 | PSV | Flange | 4 | Inlet | 346.5 | 0.00675 |
| | 18-08-2023 | 15-PSV-2751 | PSV | Flange | 4 | Outlet | 21.4 | 0.00095 |
| 114 | 18-08-2023 | 25-PSV-1951 | PSV | Flange | 6 | Inlet | 98.3 | 0.00278 |
| | 18-08-2023 | 25-PSV-1951 | PSV | Flange | 6 | Outlet | 26.4 | 0.00110 |
| 115 | 18-08-2023 | 25-PSV-1352 | PSV | Flange | 8 | Inlet | 1.5 | 0.00015 |
| | 18-08-2023 | 25-PSV-1352 | PSV | Flange | 8 | Outlet | 102.6 | 0.00287 |
| 116 | 18-08-2023 | 15-PSV-1701 A | PSV | Flange | 4 | Inlet | 53.2 | 0.00181 |
| | 18-08-2023 | 15-PSV-1701 A | PSV | Flange | 4 | Outlet | 89.5 | 0.00261 |
| 117 | 18-08-2023 | 15-PSV-1701 B | PSV | Flange | 6 | Inlet | 63.2 | 0.00204 |
| | 18-08-2023 | 15-PSV-1701 B | PSV | Flange | 6 | Outlet | 143.2 | 0.00363 |
| 118 | 18-08-2023 | 15-PSV-1801 | PSV | Flange | 8 | Inlet | 56.2 | 0.00188 |
| | 18-08-2023 | 15-PSV-1801 | PSV | Flange | 8 | Outlet | 76.3 | 0.00233 |
| 119 | 18-08-2023 | 15-PSV-1902 | PSV | Flange | 8 | Inlet | 126.5 | 0.00332 |
| | 18-08-2023 | 15-PSV-1902 | PSV | Flange | 4 | Outlet | 35.4 | 0.00136 |
| 120 | 18-08-2023 | 15-PSV-1903 | PSV | Flange | 4 | Inlet | 79.5 | 0.00240 |
| | 18-08-2023 | 15-PSV-1903 | PSV | Flange | 6 | Outlet | 6.6 | 0.00042 |
| 121 | 18-08-2023 | 15-PSV-1901 | PSV | Flange | 6 | Inlet | 175.2 | 0.00418 |
| | 18-08-2023 | 15-PSV-1901 | PSV | Flange | 2 | Outlet | 963.5 | 0.01385 |
| 122 | 18-08-2023 | 15-PSV-2002 | PSV | Flange | 2 | Inlet | 26.1 | 0.00110 |
| | 18-08-2023 | 15-PSV-2002 | PSV | Flange | 6 | Outlet | 3.5 | 0.00027 |
| 123 | 18-08-2023 | 15-PSV-2003 | PSV | Flange | 6 | Inlet | 46.2 | 0.00164 |
| | 18-08-2023 | 15-PSV-2003 | PSV | Flange | 8 | Outlet | 13.5 | 0.00069 |
| 124 | 18-08-2023 | 15-PSV-2001 | PSV | Flange | 8 | Inlet | 155.6 | 0.00384 |
| | 18-08-2023 | 15-PSV-2001 | PSV | Flange | 4 | Outlet | 93.5 | 0.00269 |
| 125 | 18-08-2023 | 15-PSV-2101 A | PSV | Flange | 4 | Inlet | 178.6 | 0.00424 |
| | 18-08-2023 | 15-PSV-2101 A | PSV | Flange | 8 | Outlet | 36.2 | 0.00138 |
| 126 | 18-08-2023 | 15-PSV-2101 B | PSV | Flange | 8 | Inlet | 155.6 | 0.00384 |
| | 18-08-2023 | 15-PSV-2101 B | PSV | Flange | 8 | Outlet | 93.5 | 0.00269 |
| 127 | 18-08-2023 | 15-PSV-2201 | PSV | Flange | 8 | Inlet | 13.4 | 0.00069 |
| | 18-08-2023 | 15-PSV-2201 | PSV | Flange | 10 | Outlet | 26.3 | 0.00110 |
| 128 | 18-08-2023 | 15-PSV-2202 | PSV | Flange | 10 | Inlet | 93.5 | 0.00269 |
| | 18-08-2023 | 15-PSV-2202 | PSV | Flange | 12 | Outlet | 50.6 | 0.00175 |
| 129 | 18-08-2023 | 15-PSV-2401 A | PSV | Flange | 12 | Inlet | 31.4 | 0.00125 |
| | 18-08-2023 | 15-PSV-2401 A | PSV | Flange | 14 | Outlet | 2.2 | 0.00019 |
| 130 | 18-08-2023 | 15-PSV-2401 B | PSV | Flange | 14 | Inlet | 93.1 | 0.00268 |
| | 18-08-2023 | 15-PSV-2401 B | PSV | Flange | 8 | Outlet | 42.5 | 0.00154 |
| 131 | 18-08-2023 | 15-PSV-2402 | PSV | Flange | 8 | Inlet | 6.2 | 0.00040 |
| | 18-08-2023 | 15-PSV-2402 | PSV | Flange | 6 | Outlet | 35.4 | 0.00136 |

# BHARAT PETROLEUM CORPORATION LIMITED, BINA-M.P.
## LDAR QUARTERLY REPORT FOR JULY 2023 TO SEPTEMBER 2023
### Monitoring - VOC Plant – MS BLOCK

| S.No. | Date | Tag. No. | Equipment | Component | Line size (inch) | Location | Screening Value sv (ppm) | Estimated Emission Rate kg/day |
|---|---|---|---|---|---|---|---|---|
| COMPONENT - PSV | | | | | | | | |
| 132 | 18-08-2023 | 15-PSV-2403 A | PSV | Flange | 6 | Inlet | 13.6 | 0.00069 |
| | 18-08-2023 | 15-PSV-2403 A | PSV | Flange | 4 | Outlet | 76.1 | 0.00233 |
| 133 | 18-08-2023 | 15-PSV-2403 B | PSV | Flange | 4 | Inlet | 23.6 | 0.00102 |
| | 18-08-2023 | 15-PSV-2403 B | PSV | Flange | 2 | Outlet | 56.4 | 0.00188 |
| 134 | 18-08-2023 | 15-PSV-2501 | PSV | Flange | 2 | Inlet | 3.1 | 0.00025 |
| | 18-08-2023 | 15-PSV-2501 | PSV | Flange | 6 | Outlet | 20.6 | 0.00093 |
| 135 | 18-08-2023 | 15-PSV-2502 | PSV | Flange | 6 | Inlet | 99.6 | 0.00281 |
| | 18-08-2023 | 15-PSV-2502 | PSV | Flange | 4 | Outlet | 263.4 | 0.00557 |
| 136 | 18-08-2023 | 15-PSV-2601 A | PSV | Flange | 4 | Inlet | 813.6 | 0.01230 |
| | 18-08-2023 | 15-PSV-2601 A | PSV | Flange | 8 | Outlet | 643.2 | 0.01043 |
| 137 | 18-08-2023 | 15-PSV-2601 B | PSV | Flange | 8 | Inlet | 61.4 | 0.00200 |
| | 18-08-2023 | 15-PSV-2601 B | PSV | Flange | 8 | Outlet | 23.6 | 0.00102 |
| 138 | 18-08-2023 | 15-PSV-2702 | PSV | Flange | 6 | Inlet | 93.4 | 0.00269 |
| | 18-08-2023 | 15-PSV-2702 | PSV | Flange | 6 | Outlet | 763.2 | 0.01176 |
| 139 | 18-08-2023 | 15-PSV-2703 | PSV | Flange | 4 | Inlet | 30.6 | 0.00123 |
| | 18-08-2023 | 15-PSV-2703 | PSV | Flange | 4 | Outlet | 99.5 | 0.00281 |
| 140 | 18-08-2023 | 15-PSV-2701 | PSV | Flange | 4 | Inlet | 62.1 | 0.00202 |
| | 18-08-2023 | 15-PSV-2701 | PSV | Flange | 4 | Outlet | 13.4 | 0.00069 |
| 141 | 18-08-2023 | 15-PSV-2801 A | PSV | Flange | 4 | Inlet | 26.3 | 0.00110 |
| | 18-08-2023 | 15-PSV-2801 A | PSV | Flange | 4 | Outlet | 789.6 | 0.01204 |
| 142 | 18-08-2023 | 15-PSV-2801 B | PSV | Flange | 2 | Inlet | 6.2 | 0.00040 |
| | 18-08-2023 | 15-PSV-2801 B | PSV | Flange | 2 | Outlet | 61.2 | 0.00200 |
| 143 | 18-08-2023 | 15-PSV-2801 C | PSV | Flange | 2 | Inlet | 35.4 | 0.00136 |
| | 18-08-2023 | 15-PSV-2801 C | PSV | Flange | 2 | Outlet | 23.6 | 0.00102 |
| 144 | 18-08-2023 | 15-PSV-2801 D | PSV | Flange | 4 | Inlet | 133.2 | 0.00345 |
| | 18-08-2023 | 15-PSV-2801 D | PSV | Flange | 4 | Outlet | 56.1 | 0.00188 |
| 145 | 18-08-2023 | 15-PSV-2901 | PSV | Flange | 3 | Inlet | 43.2 | 0.00156 |
| | 18-08-2023 | 15-PSV-2901 | PSV | Flange | 3 | Outlet | 60.1 | 0.00197 |
| 146 | 18-08-2023 | 15-PSV-2901 A | PSV | Flange | 6 | Inlet | 89.6 | 0.00261 |
| | 18-08-2023 | 15-PSV-2901 A | PSV | Flange | 6 | Outlet | 35.2 | 0.00135 |
| 147 | 18-08-2023 | 15-PSV-2901 B | PSV | Flange | 4 | Inlet | 30.2 | 0.00121 |
| | 18-08-2023 | 15-PSV-2901 B | PSV | Flange | 4 | Outlet | 66.4 | 0.00211 |
| 148 | 18-08-2023 | 15-PSV-3001 | PSV | Flange | 8 | Inlet | 79.2 | 0.00239 |
| | 18-08-2023 | 15-PSV-3001 | PSV | Flange | 8 | Outlet | 16.4 | 0.00079 |
| 149 | 18-08-2023 | 15-PSV-3002 | PSV | Flange | 10 | Inlet | 155.4 | 0.00384 |
| | 18-08-2023 | 15-PSV-3002 | PSV | Flange | 10 | Outlet | 632.6 | 0.01031 |
| 150 | 18-08-2023 | 15-PSV-3101 | PSV | Flange | 8 | Inlet | 9.4 | 0.00053 |
| | 18-08-2023 | 15-PSV-3101 | PSV | Flange | 8 | Outlet | 895.2 | 0.01316 |
| 151 | 18-08-2023 | 15-PSV-3102 | PSV | Flange | 6 | Inlet | 36.1 | 0.00138 |
| | 18-08-2023 | 15-PSV-3102 | PSV | Flange | 6 | Outlet | 24.5 | 0.00105 |
| 152 | 18-08-2023 | 15-PSV-3201 | PSV | Flange | 4 | Inlet | 52.3 | 0.00179 |
| | 18-08-2023 | 15-PSV-3201 | PSV | Flange | 4 | Outlet | 16.5 | 0.00079 |
| 153 | 18-08-2023 | 15-PSV-3204 | PSV | Flange | 6 | Inlet | 89.4 | 0.00260 |
| | 18-08-2023 | 15-PSV-3204 | PSV | Flange | 6 | Outlet | 122.6 | 0.00325 |

# BHARAT PETROLEUM CORPORATION LIMITED, BINA-M.P.
## LDAR QUARTERLY REPORT FOR JULY 2023 TO SEPTEMBER 2023
### Monitoring - VOC Plant – MS BLOCK

| S.No. | Date | Tag. No. | Equipment | Component | Line size (inch) | Location | Screening Value sv (ppm) | Estimated Emission Rate kg/day |
|---|---|---|---|---|---|---|---|---|
| **COMPONENT - PSV** | | | | | | | | |
| 154 | 18-08-2023 | 15-PSV-3205 | PSV | Flange | 8 | Inlet | 35.2 | 0.00135 |
| | 18-08-2023 | 15-PSV-3205 | PSV | Flange | 8 | Outlet | 163.2 | 0.00398 |
| 155 | 18-08-2023 | 15-PSV-3202 | PSV | Flange | 6 | Inlet | 46.3 | 0.00164 |
| | 18-08-2023 | 15-PSV-3202 | PSV | Flange | 6 | Outlet | 120.6 | 0.00321 |
| 156 | 18-08-2023 | 15-PSV-3203 | PSV | Flange | 8 | Inlet | 35.2 | 0.00135 |
| | 18-08-2023 | 15-PSV-3203 | PSV | Flange | 8 | Outlet | 79.4 | 0.00240 |
| 157 | 18-08-2023 | 15-PSV-5203 | PSV | Flange | 6 | Inlet | 60.1 | 0.00197 |
| | 18-08-2023 | 15-PSV-5203 | PSV | Flange | 6 | Outlet | 452.6 | 0.00814 |
| 158 | 18-08-2023 | 15-PSV-5201 | PSV | Flange | 6 | Inlet | 36.5 | 0.00139 |
| | 18-08-2023 | 15-PSV-5201 | PSV | Flange | 6 | Outlet | 23.6 | 0.00102 |
| 159 | 18-08-2023 | 15-PSV-5301 | PSV | Flange | 4 | Inlet | 93.4 | 0.00269 |
| | 18-08-2023 | 15-PSV-5301 | PSV | Flange | 4 | Outlet | 26.5 | 0.00111 |
| 160 | 18-08-2023 | 15-PSV-5302 | PSV | Flange | 4 | Inlet | 80.3 | 0.00242 |
| | 18-08-2023 | 15-PSV-5302 | PSV | Flange | 4 | Outlet | 6.2 | 0.00040 |
| 161 | 18-08-2023 | 15-PSV-5101 A | PSV | Flange | 2 | Inlet | 23.6 | 0.00102 |
| | 18-08-2023 | 15-PSV-5101 A | PSV | Flange | 2 | Outlet | 70.1 | 0.00220 |
| 162 | 18-08-2023 | 15-PSV-5101 B | PSV | Flange | 6 | Inlet | 45.6 | 0.00162 |
| | 18-08-2023 | 15-PSV-5101 B | PSV | Flange | 6 | Outlet | 2.6 | 0.00022 |
| 163 | 18-08-2023 | 15-PSV-5202 | PSV | Flange | 8 | Inlet | 35.1 | 0.00135 |
| | 18-08-2023 | 15-PSV-5202 | PSV | Flange | 8 | Outlet | 133.6 | 0.00345 |
| **Total VOC Emission from PSV** | | | | | | | | **0.78084** |
| **COMPONENT - COMPRESSOR** | | | | | | | | |
| 1 | 18-08-2023 | 15-KM-PR-201 B | Compessor | Pump Seals | - | Compessor | 82.6 | 0.01783 |
| 2 | 18-08-2023 | 15-KM-PR-201 A | Compessor | Pump Seals | - | Compessor | 35.1 | 0.01058 |
| 3 | 18-08-2023 | 19-KM-PR-101 B | Compessor | Pump Seals | - | Compessor | 70.6 | 0.01620 |
| 4 | 18-08-2023 | 19-KM-PR-101 A | Compessor | Pump Seals | - | Compessor | 53.1 | 0.01362 |
| 5 | 18-08-2023 | 20-KM-PR-102 B | Compessor | Pump Seals | - | Compessor | 96.5 | 0.01960 |
| 6 | 18-08-2023 | 20-KM-PR-102 A | Compessor | Pump Seals | - | Compessor | 13.2 | 0.00583 |
| 7 | 18-08-2023 | 25-KA-SC-50 | Compessor | Pump Seals | - | Compessor | 40.6 | 0.01156 |
| 8 | 18-08-2023 | 15N-KA-RP-1201 | Compessor | Pump Seals | - | Compessor | 93.5 | 0.01923 |
| 9 | 18-08-2023 | 20-KA-PR-102 C | Compessor | Pump Seals | - | Compessor | 8.1 | 0.00432 |
| **Total VOC Emission from Compressor** | | | | | | | | **0.11877** |

# BHARAT PETROLEUM CORPORATION LIMITED, BINA-M.P.
## LDAR QUARTERLY REPORT FOR JULY 2023 TO SEPTEMBER 2023
### Monitoring - VOC Plant – MS BLOCK

| S.No. | Date | Tag. No. | Equipment | Component | Line size (inch) | Location | Screening Value sv (ppm) | Estimated Emission Rate kg/day |
|---|---|---|---|---|---|---|---|---|
| COMPONENT - EXCHANGER | | | | | | | | |
| 1 | 18-08-2023 | 15-EE-00-218 | Exchanger | Flange | 8 | Inlet | 86.3 | 0.00254 |
| | 18-08-2023 | 15-EE-00-218 | Exchanger | Flange | 6 | Outlet | 156.2 | 0.00386 |
| 2 | 18-08-2023 | 15-EE-00-217 | Exchanger | Flange | 10 | Inlet | 249.3 | 0.00536 |
| | 18-08-2023 | 15-EE-00-217 | Exchanger | Flange | 8 | Outlet | 30.6 | 0.00123 |
| 3 | 18-08-2023 | 15-EE-00-216 | Exchanger | Flange | 6 | Inlet | 50.1 | 0.00173 |
| | 18-08-2023 | 15-EE-00-216 | Exchanger | Flange | 4 | Outlet | 24.8 | 0.00106 |
| 4 | 18-08-2023 | 15-EE-00-219 | Exchanger | Flange | 8 | Inlet | 96.6 | 0.00275 |
| | 18-08-2023 | 15-EE-00-219 | Exchanger | Flange | 6 | Outlet | 23.4 | 0.00102 |
| 5 | 18-08-2023 | 15-EE-00-211 | Exchanger | Flange | 10 | Inlet | 56.2 | 0.00188 |
| | 18-08-2023 | 15-EE-00-211 | Exchanger | Flange | 8 | Outlet | 163.2 | 0.00398 |
| 6 | 18-08-2023 | 15-EE-00-210 | Exchanger | Flange | 12 | Inlet | 80.4 | 0.00242 |
| | 18-08-2023 | 15-EE-00-210 | Exchanger | Flange | 10 | Outlet | 26.3 | 0.00110 |
| 7 | 18-08-2023 | 15-EE-00-209 A | Exchanger | Flange | 6 | Inlet | 12.4 | 0.00065 |
| | 18-08-2023 | 15-EE-00-209 A | Exchanger | Flange | 4 | Outlet | 156.3 | 0.00386 |
| 8 | 18-08-2023 | 15-EE-00-209 B | Exchanger | Flange | 8 | Inlet | 30.4 | 0.00122 |
| | 18-08-2023 | 15-EE-00-209 B | Exchanger | Flange | 6 | Outlet | 77.6 | 0.00236 |
| 9 | 18-08-2023 | 15-EE-00-209 C | Exchanger | Flange | 6 | Inlet | 179.6 | 0.00425 |
| | 18-08-2023 | 15-EE-00-209 C | Exchanger | Flange | 4 | Outlet | 36.5 | 0.00139 |
| 10 | 18-08-2023 | 15-EE-00-208 | Exchanger | Flange | 10 | Inlet | 30.2 | 0.00121 |
| | 18-08-2023 | 15-EE-00-208 | Exchanger | Flange | 8 | Outlet | 62.5 | 0.00202 |
| 11 | 18-08-2023 | 15-EE-00-205 A | Exchanger | Flange | 12 | Inlet | 144.3 | 0.00365 |
| | 18-08-2023 | 15-EE-00-205 A | Exchanger | Flange | 10 | Outlet | 26.5 | 0.00111 |
| 12 | 18-08-2023 | 15-EE-00-205 B | Exchanger | Flange | 12 | Inlet | 23.1 | 0.00101 |
| | 18-08-2023 | 15-EE-00-205 B | Exchanger | Flange | 10 | Outlet | 30.6 | 0.00123 |
| 13 | 18-08-2023 | 15-EE-00-206 A | Exchanger | Flange | 8 | Inlet | 52.1 | 0.00178 |
| | 18-08-2023 | 15-EE-00-206 A | Exchanger | Flange | 6 | Outlet | 2.6 | 0.00022 |
| 14 | 18-08-2023 | 15-EE-00-206 B | Exchanger | Flange | 8 | Inlet | 612.3 | 0.01007 |
| | 18-08-2023 | 15-EE-00-206 B | Exchanger | Flange | 6 | Outlet | 46.5 | 0.00164 |
| 15 | 18-08-2023 | 25-EE-00-52 | Exchanger | Flange | 8 | Inlet | 2.2 | 0.00019 |
| | 18-08-2023 | 25-EE-00-52 | Exchanger | Flange | 6 | Outlet | 79.6 | 0.00240 |
| 16 | 18-08-2023 | 25-EE-00-54 | Exchanger | Flange | 8 | Inlet | 63.3 | 0.00204 |
| | 18-08-2023 | 25-EE-00-54 | Exchanger | Flange | 6 | Outlet | 23.6 | 0.00102 |
| 17 | 18-08-2023 | 25-EE-00-15 A/B | Exchanger | Flange | 8 | Inlet | 163.1 | 0.00397 |
| | 18-08-2023 | 25-EE-00-15 A/B | Exchanger | Flange | 6 | Outlet | 20.6 | 0.00093 |
| 18 | 18-08-2023 | 25-EE-00-50 | Exchanger | Flange | 8 | Inlet | 36.4 | 0.00138 |
| | 18-08-2023 | 25-EE-00-50 | Exchanger | Flange | 6 | Outlet | 163.4 | 0.00398 |
| 19 | 18-08-2023 | 25-EE-00-53 | Exchanger | Flange | 8 | Inlet | 20.6 | 0.00093 |
| | 18-08-2023 | 25-EE-00-53 | Exchanger | Flange | 6 | Outlet | 93.2 | 0.00268 |
| 20 | 18-08-2023 | 25-EE-00-55 | Exchanger | Flange | 6 | Inlet | 177.4 | 0.00422 |
| | 18-08-2023 | 25-EE-00-55 | Exchanger | Flange | 4 | Outlet | 26.3 | 0.00110 |
| 21 | 18-08-2023 | 20-EE-00-106 | Exchanger | Flange | 6 | Inlet | 31.2 | 0.00124 |
| | 18-08-2023 | 20-EE-00-106 | Exchanger | Flange | 4 | Outlet | 189.6 | 0.00442 |
| 22 | 18-08-2023 | 20-EE-00-107 A/B | Exchanger | Flange | 8 | Inlet | 36.2 | 0.00138 |
| | 18-08-2023 | 20-EE-00-107 A/B | Exchanger | Flange | 6 | Outlet | 30.6 | 0.00123 |

# BHARAT PETROLEUM CORPORATION LIMITED, BINA-M.P.
## LDAR QUARTERLY REPORT FOR JULY 2023 TO SEPTEMBER 2023
### Monitoring - VOC Plant – MS BLOCK

| S.No. | Date | Tag. No. | Equipment | Component | Line size (inch) | Location | Screening Value sv (ppm) | Estimated Emission Rate kg/day |
|---|---|---|---|---|---|---|---|---|
| COMPONENT - EXCHANGER | | | | | | | | |
| 23 | 18-08-2023 | 20-EE-00-107 C/D | Exchanger | Flange | 8 | Inlet | 53.2 | 0.00181 |
| | 18-08-2023 | 20-EE-00-107 C/D | Exchanger | Flange | 6 | Outlet | 10.2 | 0.00057 |
| 24 | 18-08-2023 | 20-EE-00-109 | Exchanger | Flange | 6 | Inlet | 46.5 | 0.00164 |
| | 18-08-2023 | 20-EE-00-109 | Exchanger | Flange | 4 | Outlet | 36.9 | 0.00140 |
| 25 | 18-08-2023 | 20-EE-00-108 A/B | Exchanger | Flange | 8 | Inlet | 83.1 | 0.00247 |
| | 18-08-2023 | 20-EE-00-108 A/B | Exchanger | Flange | 6 | Outlet | 46.5 | 0.00164 |
| 26 | 18-08-2023 | 20-EE-00-102 A/B | Exchanger | Flange | 6 | Inlet | 83.4 | 0.00248 |
| | 18-08-2023 | 20-EE-00-102 A/B | Exchanger | Flange | 4 | Outlet | 266.4 | 0.00561 |
| 27 | 18-08-2023 | 19-EE-00-106 A/B | Exchanger | Flange | 10 | Inlet | 8.4 | 0.00049 |
| | 18-08-2023 | 19-EE-00-106 A/B | Exchanger | Flange | 8 | Outlet | 163.2 | 0.00398 |
| 28 | 18-08-2023 | 19-EE-00-106 C/D | Exchanger | Flange | 10 | Inlet | 93.6 | 0.00269 |
| | 18-08-2023 | 19-EE-00-106 C/D | Exchanger | Flange | 8 | Outlet | 23.4 | 0.00102 |
| 29 | 18-08-2023 | 19-EE-00-102 | Exchanger | Flange | 12 | Inlet | 146.2 | 0.00368 |
| | 18-08-2023 | 19-EE-00-102 | Exchanger | Flange | 10 | Outlet | 53.8 | 0.00182 |
| 30 | 18-08-2023 | 19-EE-00-101 A/B | Exchanger | Flange | 14 | Inlet | 9.4 | 0.00053 |
| | 18-08-2023 | 19-EE-00-101 A/B | Exchanger | Flange | 12 | Outlet | 26.3 | 0.00110 |
| 31 | 18-08-2023 | 19-EE-00-101 C/D | Exchanger | Flange | 14 | Inlet | 66.4 | 0.00211 |
| | 18-08-2023 | 19-EE-00-101 C/D | Exchanger | Flange | 12 | Outlet | 89.7 | 0.00261 |
| 32 | 18-08-2023 | 19-EE-00-101 E/F | Exchanger | Flange | 14 | Inlet | 36.4 | 0.00138 |
| | 18-08-2023 | 19-EE-00-101 E/F | Exchanger | Flange | 12 | Outlet | 20.1 | 0.00091 |
| 33 | 18-08-2023 | 19-EE-00-103 A/B | Exchanger | Flange | 10 | Inlet | 196.4 | 0.00453 |
| | 18-08-2023 | 19-EE-00-103 A/B | Exchanger | Flange | 8 | Outlet | 23.8 | 0.00103 |
| 34 | 18-08-2023 | 19-EE-00-104 A/B | Exchanger | Flange | 8 | Inlet | 73.1 | 0.00226 |
| | 18-08-2023 | 19-EE-00-104 A/B | Exchanger | Flange | 6 | Outlet | 26.4 | 0.00110 |
| 35 | 18-08-2023 | 20-EE-00-110 | Exchanger | Flange | 10 | Inlet | 86.3 | 0.00254 |
| | 18-08-2023 | 20-EE-00-110 | Exchanger | Flange | 8 | Outlet | 66.4 | 0.00211 |
| 36 | 18-08-2023 | 20-EE-00-104 | Exchanger | Flange | 6 | Inlet | 79.1 | 0.00239 |
| | 18-08-2023 | 20-EE-00-104 | Exchanger | Flange | 4 | Outlet | 25.6 | 0.00108 |
| 37 | 18-08-2023 | 20-EE-00-105 | Exchanger | Flange | 8 | Inlet | 365.4 | 0.00701 |
| | 18-08-2023 | 20-EE-00-105 | Exchanger | Flange | 6 | Outlet | 93.4 | 0.00269 |
| 38 | 18-08-2023 | 15-EE-00-203 | Exchanger | Flange | 8 | Inlet | 126.8 | 0.00333 |
| | 18-08-2023 | 15-EE-00-203 | Exchanger | Flange | 6 | Outlet | 9.4 | 0.00053 |
| 39 | 18-08-2023 | 15-EE-00-204 | Exchanger | Flange | 10 | Inlet | 63.2 | 0.00204 |
| | 18-08-2023 | 15-EE-00-204 | Exchanger | Flange | 8 | Outlet | 13.2 | 0.00068 |
| 40 | 18-08-2023 | 15-EE-00-220 | Exchanger | Flange | 12 | Inlet | 132.6 | 0.00344 |
| | 18-08-2023 | 15-EE-00-220 | Exchanger | Flange | 10 | Outlet | 30.5 | 0.00122 |
| 41 | 18-08-2023 | 15-EE-00-221 | Exchanger | Flange | 6 | Inlet | 63.9 | 0.00206 |
| | 18-08-2023 | 15-EE-00-221 | Exchanger | Flange | 4 | Outlet | 86.1 | 0.00254 |
| 42 | 18-08-2023 | 15-EE-00-214 | Exchanger | Flange | 6 | Inlet | 28.7 | 0.00117 |
| | 18-08-2023 | 15-EE-00-214 | Exchanger | Flange | 4 | Outlet | 56.9 | 0.00190 |
| 43 | 18-08-2023 | 15-EE-00-202 | Exchanger | Flange | 6 | Inlet | 43.1 | 0.00156 |
| | 18-08-2023 | 15-EE-00-202 | Exchanger | Flange | 4 | Outlet | 56.5 | 0.00189 |
| 44 | 18-08-2023 | 15-EE-00-225 | Exchanger | Flange | 8 | Inlet | 62.2 | 0.00202 |
| | 18-08-2023 | 15-EE-00-225 | Exchanger | Flange | 6 | Outlet | 938.5 | 0.01360 |

# BHARAT PETROLEUM CORPORATION LIMITED, BINA-M.P.
## LDAR QUARTERLY REPORT FOR JULY 2023 TO SEPTEMBER 2023
### Monitoring - VOC Plant – MS BLOCK

| S.No. | Date | Tag. No. | Equipment | Component | Line size (inch) | Location | Screening Value sv (ppm) | Estimated Emission Rate kg/day |
|---|---|---|---|---|---|---|---|---|
| COMPONENT - EXCHANGER | | | | | | | | |
| 45 | 18-08-2023 | 15-EE-00-226 | Exchanger | Flange | 8 | Inlet | 89.5 | 0.00261 |
| | 18-08-2023 | 15-EE-00-226 | Exchanger | Flange | 6 | Outlet | 26.5 | 0.00111 |
| 46 | 18-08-2023 | 15-EE-00-215 | Exchanger | Flange | 6 | Inlet | 140.6 | 0.00358 |
| | 18-08-2023 | 15-EE-00-215 | Exchanger | Flange | 4 | Outlet | 36.5 | 0.00139 |
| 47 | 18-08-2023 | 15-EE-00-201 | Exchanger | Flange | 8 | Inlet | 2.5 | 0.00021 |
| | 18-08-2023 | 15-EE-00-201 | Exchanger | Flange | 6 | Outlet | 1.6 | 0.00015 |
| 48 | 18-08-2023 | 19-EE-00-108 A | Exchanger | Flange | 8 | Inlet | 35.5 | 0.00136 |
| | 18-08-2023 | 19-EE-00-108 A | Exchanger | Flange | 6 | Outlet | 6.8 | 0.00043 |
| 49 | 18-08-2023 | 19-EE-00-108 B | Exchanger | Flange | 6 | Inlet | 93.5 | 0.00269 |
| | 18-08-2023 | 19-EE-00-108 B | Exchanger | Flange | 4 | Outlet | 133.2 | 0.00345 |
| 50 | 18-08-2023 | 15-EE-00-1201 | Exchanger | Flange | 10 | Inlet | 63.5 | 0.00205 |
| | 18-08-2023 | 15-EE-00-1201 | Exchanger | Flange | 8 | Outlet | 93.5 | 0.00269 |
| 51 | 18-08-2023 | 15-EE-00-1202 | Exchanger | Flange | 10 | Inlet | 46.2 | 0.00164 |
| | 18-08-2023 | 15-EE-00-1202 | Exchanger | Flange | 8 | Outlet | 79.8 | 0.00240 |
| 52 | 18-08-2023 | 15-EE-00-1203 | Exchanger | Flange | 8 | Inlet | 35.4 | 0.00136 |
| | 18-08-2023 | 15-EE-00-1203 | Exchanger | Flange | 6 | Outlet | 13.6 | 0.00069 |
| 53 | 18-08-2023 | 15-EE-00-1204 | Exchanger | Flange | 8 | Inlet | 53.1 | 0.00181 |
| | 18-08-2023 | 15-EE-00-1204 | Exchanger | Flange | 6 | Outlet | 166.5 | 0.00403 |
| 54 | 18-08-2023 | 15-EE-00-1205 | Exchanger | Flange | 10 | Inlet | 23.6 | 0.00102 |
| | 18-08-2023 | 15-EE-00-1205 | Exchanger | Flange | 8 | Outlet | 93.4 | 0.00269 |
| 55 | 18-08-2023 | 15-EE-00-1206 | Exchanger | Flange | 6 | Inlet | 13.5 | 0.00069 |
| | 18-08-2023 | 15-EE-00-1206 | Exchanger | Flange | 4 | Outlet | 20.6 | 0.00093 |
| 56 | 18-08-2023 | 15-EE-00-1207 | Exchanger | Flange | 8 | Inlet | 55.4 | 0.00186 |
| | 18-08-2023 | 15-EE-00-1207 | Exchanger | Flange | 6 | Outlet | 89.4 | 0.00260 |
| 57 | 18-08-2023 | 15-EE-00-1208 | Exchanger | Flange | 8 | Inlet | 5.6 | 0.00037 |
| | 18-08-2023 | 15-EE-00-1208 | Exchanger | Flange | 6 | Outlet | 23.1 | 0.00101 |
| 58 | 18-08-2023 | 15-EE-00-1209 | Exchanger | Flange | 10 | Inlet | 133.6 | 0.00345 |
| | 18-08-2023 | 15-EE-00-1209 | Exchanger | Flange | 8 | Outlet | 62.4 | 0.00202 |
| 59 | 18-08-2023 | 15-EE-00-1210 | Exchanger | Flange | 6 | Inlet | 13.5 | 0.00069 |
| | 18-08-2023 | 15-EE-00-1210 | Exchanger | Flange | 4 | Outlet | 183.1 | 0.00431 |
| 60 | 18-08-2023 | 15-EE-00-1211 | Exchanger | Flange | 8 | Inlet | 26.7 | 0.00111 |
| | 18-08-2023 | 15-EE-00-1211 | Exchanger | Flange | 6 | Outlet | 89.4 | 0.00260 |
| 61 | 18-08-2023 | 15-EE-00-1212 | Exchanger | Flange | 8 | Inlet | 62.4 | 0.00202 |
| | 18-08-2023 | 15-EE-00-1212 | Exchanger | Flange | 6 | Outlet | 13.9 | 0.00070 |
| 62 | 18-08-2023 | 19-EE-00-101 K | Exchanger | Flange | 10 | Inlet | 6.9 | 0.00043 |
| | 18-08-2023 | 19-EE-00-101 K | Exchanger | Flange | 10 | Outlet | 86.1 | 0.00254 |
| 63 | 18-08-2023 | 19-EE-00-101 L | Exchanger | Flange | 8 | Inlet | 23.3 | 0.00101 |
| | 18-08-2023 | 19-EE-00-101 L | Exchanger | Flange | 8 | Outlet | 30.1 | 0.00121 |
| 64 | 18-08-2023 | 19-EE-00-101 I | Exchanger | Flange | 12 | Inlet | 26.3 | 0.00110 |
| | 18-08-2023 | 19-EE-00-101 I | Exchanger | Flange | 12 | Outlet | 61.4 | 0.00200 |
| 65 | 18-08-2023 | 19-EE-00-101 J | Exchanger | Flange | 10 | Inlet | 25.6 | 0.00108 |
| | 18-08-2023 | 19-EE-00-101 J | Exchanger | Flange | 10 | Outlet | 36.2 | 0.00138 |
| 66 | 18-08-2023 | 19-EE-00-101 G | Exchanger | Flange | 12 | Inlet | 36.3 | 0.00138 |
| | 18-08-2023 | 19-EE-00-101 G | Exchanger | Flange | 12 | Outlet | 23.6 | 0.00102 |
| 67 | 18-08-2023 | 19-EE-00-101 H | Exchanger | Flange | 10 | Inlet | 50.2 | 0.00174 |
| | 18-08-2023 | 19-EE-00-101 H | Exchanger | Flange | 10 | Outlet | 26.3 | 0.00110 |
| Total VOC Emission from Exchanger | | | | | | | | 0.28207 |

**Total VOC Emission from MS Block in Quarter July 2023 to September 2023 is 1.66810 kg/day**

# BHARAT PETROLEUM CORPORATION LIMITED, BINA-M.P.
## LDAR QUARTERLY REPORT FOR JULY 2023 TO SEPTEMBER 2023
### Monitoring - VOC Plant – SRU

| S.No. | Date | Tag. No. | Equipment | Component | Line size (inch) | Location | Screening Value sv (ppm) | Estimated Emission Rate kg/day |
|---|---|---|---|---|---|---|---|---|
| COMPONENT - VALVE | | | | | | | | |
| 1 | 25-08-2023 | 29-PA-CF-010 A | Pump Valve | Valve | 8 | Suc. Valve | 50.1 | 0.00102 |
| 2 | 25-08-2023 | 29-PA-CF-010 B | Pump Valve | Valve | 8 | Suc. Valve | 23.6 | 0.00058 |
| 3 | 25-08-2023 | 29-PA-CF-011 A | Pump Valve | Valve | 4 | Suc. Valve | 93.4 | 0.00162 |
| 4 | 25-08-2023 | 29-PA-CF-011 B | Pump Valve | Valve | 4 | Suc. Valve | 23.1 | 0.00057 |
| 5 | 25-08-2023 | 29-PA-CF-008 A | Pump Valve | Valve | 4 | Suc. Valve | 46.8 | 0.00097 |
| 6 | 25-08-2023 | 29-PA-CF-008 B | Pump Valve | Valve | 4 | Suc. Valve | 93.4 | 0.00162 |
| 7 | 25-08-2023 | 29-PA-CF-007 | Pump Valve | Valve | 12 | Suc. Valve | 26.4 | 0.00063 |
| 8 | 25-08-2023 | 29-PA-CF-006 A | Pump Valve | Valve | 12 | Suc. Valve | 13.2 | 0.00038 |
| 9 | 25-08-2023 | 29-PA-CF-006 B | Pump Valve | Valve | 12 | Suc. Valve | 30.6 | 0.00071 |
| 10 | 25-08-2023 | 28-PA-CF-102 A | Pump Valve | Valve | 12 | Suc. Valve | 93.8 | 0.00163 |
| 11 | 25-08-2023 | 28-PA-CF-102 B | Pump Valve | Valve | 6 | Suc. Valve | 73.4 | 0.00135 |
| 12 | 25-08-2023 | 28-PA-CF-102 C | Pump Valve | Valve | 6 | Suc. Valve | 15.6 | 0.00043 |
| 13 | 25-08-2023 | 28-PA-CF-103 A | Pump Valve | Valve | 8 | Suc. Valve | 123.5 | 0.00200 |
| 14 | 25-08-2023 | 28-PA-CF-103 B | Pump Valve | Valve | 8 | Suc. Valve | 63.4 | 0.00121 |
| 15 | 25-08-2023 | 28-PA-CF-202 A | Pump Valve | Valve | 4 | Suc. Valve | 80.1 | 0.00145 |
| 16 | 25-08-2023 | 28-PA-CF-202 B | Pump Valve | Valve | 4 | Suc. Valve | 2.6 | 0.00011 |
| 17 | 25-08-2023 | 28-PA-CF-203 A | Pump Valve | Valve | 6 | Suc. Valve | 316.5 | 0.00403 |
| 18 | 25-08-2023 | 28-PA-CF-203 B | Pump Valve | Valve | 6 | Suc. Valve | 2.1 | 0.00010 |
| 19 | 25-08-2023 | 28-PA-CF-204 A | Pump Valve | Valve | 10 | Suc. Valve | 20.6 | 0.00053 |
| 20 | 25-08-2023 | 28-PA-CF-204 B | Pump Valve | Valve | 10 | Suc. Valve | 34.5 | 0.00077 |
| 21 | 25-08-2023 | 28-PA-CF-204 C | Pump Valve | Valve | 10 | Suc. Valve | 63.8 | 0.00122 |
| 22 | 25-08-2023 | 29-PA-CF-002 A | Pump Valve | Valve | 12 | Suc. Valve | 93.4 | 0.00162 |
| 23 | 25-08-2023 | 29-PA-CF-002 B | Pump Valve | Valve | 12 | Suc. Valve | 23.6 | 0.00058 |
| 24 | 25-08-2023 | 29-PA-CF-002 C | Pump Valve | Valve | 4 | Suc. Valve | 53.4 | 0.00107 |
| 25 | 25-08-2023 | 29-PA-CF-002 D | Pump Valve | Valve | 4 | Suc. Valve | 80.4 | 0.00145 |
| 26 | 25-08-2023 | 27-PA-CF-102 A | Pump Valve | Valve | 6 | Suc. Valve | 156.3 | 0.00238 |
| 27 | 25-08-2023 | 27-PA-CF-102 B | Pump Valve | Valve | 6 | Suc. Valve | 20.4 | 0.00052 |
| 28 | 25-08-2023 | 29-PA-CF-009 A | Pump Valve | Valve | 6 | Suc. Valve | 73.6 | 0.00136 |
| 29 | 25-08-2023 | 29-PA-CF-009 B | Pump Valve | Valve | 6 | Suc. Valve | 93.4 | 0.00162 |
| 30 | 25-08-2023 | 29-PA-CF-009 C | Pump Valve | Valve | 20 | Suc. Valve | 156.2 | 0.00238 |
| 31 | 25-08-2023 | 27-PA-CF-101 A | Pump Valve | Valve | 20 | Suc. Valve | 36.8 | 0.00081 |
| 32 | 25-08-2023 | 27-PA-CF-101 B | Pump Valve | Valve | 20 | Suc. Valve | 98.4 | 0.00169 |
| 33 | 25-08-2023 | 27-PA-CF-103 A | Pump Valve | Valve | 6 | Suc. Valve | 153.4 | 0.00235 |
| 34 | 25-08-2023 | 27-PA-CF-103 B | Pump Valve | Valve | 6 | Suc. Valve | 60.2 | 0.00117 |
| 35 | 25-08-2023 | 29-PA-CF-010 A | Pump Valve | Valve | 2 | Dis. Valve | 13.5 | 0.00038 |
| 36 | 25-08-2023 | 29-PA-CF-010 B | Pump Valve | Valve | 2 | Dis. Valve | 83.4 | 0.00149 |
| 37 | 25-08-2023 | 29-PA-CF-011 A | Pump Valve | Valve | 6 | Dis. Valve | 16.5 | 0.00044 |
| 38 | 25-08-2023 | 29-PA-CF-011 B | Pump Valve | Valve | 6 | Dis. Valve | 3.4 | 0.00014 |
| 39 | 25-08-2023 | 29-PA-CF-008 A | Pump Valve | Valve | 10 | Dis. Valve | 20.8 | 0.00053 |
| 40 | 25-08-2023 | 29-PA-CF-008 B | Pump Valve | Valve | 10 | Dis. Valve | 73.4 | 0.00135 |
| 41 | 25-08-2023 | 29-PA-CF-007 | Pump Valve | Valve | 10 | Dis. Valve | 6.4 | 0.00022 |
| 42 | 25-08-2023 | 29-PA-CF-006 A | Pump Valve | Valve | 8 | Dis. Valve | 25.6 | 0.00062 |
| 43 | 25-08-2023 | 29-PA-CF-006 B | Pump Valve | Valve | 8 | Dis. Valve | 34.1 | 0.00076 |
| 44 | 25-08-2023 | 28-PA-CF-102 A | Pump Valve | Valve | 8 | Dis. Valve | 23.6 | 0.00058 |

# BHARAT PETROLEUM CORPORATION LIMITED, BINA-M.P.
## LDAR QUARTERLY REPORT FOR JULY 2023 TO SEPTEMBER 2023
### Monitoring - VOC Plant – SRU

| S.No. | Date | Tag. No. | Equipment | Component | Line size (inch) | Location | Screening Value sv (ppm) | Estimated Emission Rate kg/day |
|---|---|---|---|---|---|---|---|---|
| COMPONENT - VALVE | | | | | | | | |
| 45 | 25-08-2023 | 28-PA-CF-102 B | Pump Valve | Valve | 8 | Dis. Valve | 53.1 | 0.00106 |
| 46 | 25-08-2023 | 28-PA-CF-102 C | Pump Valve | Valve | 8 | Dis. Valve | 20.6 | 0.00053 |
| 47 | 25-08-2023 | 28-PA-CF-103 A | Pump Valve | Valve | 3 | Dis. Valve | 3.1 | 0.00013 |
| 48 | 25-08-2023 | 28-PA-CF-103 B | Pump Valve | Valve | 3 | Dis. Valve | 40.6 | 0.00087 |
| 49 | 25-08-2023 | 28-PA-CF-202 A | Pump Valve | Valve | 6 | Dis. Valve | 39.8 | 0.00086 |
| 50 | 25-08-2023 | 28-PA-CF-202 B | Pump Valve | Valve | 6 | Dis. Valve | 73.1 | 0.00135 |
| 51 | 25-08-2023 | 28-PA-CF-203 A | Pump Valve | Valve | 10 | Dis. Valve | 52.4 | 0.00105 |
| 52 | 25-08-2023 | 28-PA-CF-203 B | Pump Valve | Valve | 10 | Dis. Valve | 23.6 | 0.00058 |
| 53 | 25-08-2023 | 28-PA-CF-204 A | Pump Valve | Valve | 10 | Dis. Valve | 5.4 | 0.00019 |
| 54 | 25-08-2023 | 28-PA-CF-204 B | Pump Valve | Valve | 10 | Dis. Valve | 162.5 | 0.00245 |
| 55 | 25-08-2023 | 28-PA-CF-204 C | Pump Valve | Valve | 10 | Dis. Valve | 36.5 | 0.00080 |
| 56 | 25-08-2023 | 29-PA-CF-002 A | Pump Valve | Valve | 3 | Dis. Valve | 43.2 | 0.00091 |
| 57 | 25-08-2023 | 29-PA-CF-002 B | Pump Valve | Valve | 3 | Dis. Valve | 20.1 | 0.00052 |
| 58 | 25-08-2023 | 29-PA-CF-002 C | Pump Valve | Valve | 4 | Dis. Valve | 246.5 | 0.00334 |
| 59 | 25-08-2023 | 29-PA-CF-002 D | Pump Valve | Valve | 4 | Dis. Valve | 39.8 | 0.00086 |
| 60 | 25-08-2023 | 27-PA-CF-102 A | Pump Valve | Valve | 4 | Dis. Valve | 6.4 | 0.00022 |
| 61 | 25-08-2023 | 27-PA-CF-102 B | Pump Valve | Valve | 4 | Dis. Valve | 23.5 | 0.00058 |
| 62 | 25-08-2023 | 29-PA-CF-009 A | Pump Valve | Valve | 4 | Dis. Valve | 6.4 | 0.00022 |
| 63 | 25-08-2023 | 29-PA-CF-009 B | Pump Valve | Valve | 18 | Dis. Valve | 23.1 | 0.00057 |
| 64 | 25-08-2023 | 29-PA-CF-009 C | Pump Valve | Valve | 18 | Dis. Valve | 80.6 | 0.00145 |
| 65 | 25-08-2023 | 27-PA-CF-101 A | Pump Valve | Valve | 18 | Dis. Valve | 45.8 | 0.00095 |
| 66 | 25-08-2023 | 27-PA-CF-101 B | Pump Valve | Valve | 18 | Dis. Valve | 90.1 | 0.00158 |
| 67 | 25-08-2023 | 27-PA-CF-103 A | Pump Valve | Valve | 4 | Dis. Valve | 23.5 | 0.00058 |
| 68 | 25-08-2023 | 27-PA-CF-103 B | Pump Valve | Valve | 6 | Dis. Valve | 6.4 | 0.00022 |
| 69 | 25-08-2023 | 27-FV-1102 | Control Valve | Valve | 4 | Control Valve | 155.6 | 0.00237 |
| 70 | 25-08-2023 | 27-FV-1103 | Control Valve | Valve | 8 | Control Valve | 23.4 | 0.00058 |
| 71 | 25-08-2023 | 29-TV-2501 | Control Valve | Valve | 4 | Control Valve | 26.4 | 0.00063 |
| 72 | 25-08-2023 | 28-PV-2101 A | Control Valve | Valve | 10 | Control Valve | 3.5 | 0.00014 |
| 73 | 25-08-2023 | 28-FV-2203 | Control Valve | Valve | 6 | Control Valve | 24.6 | 0.00060 |
| 74 | 25-08-2023 | 29-FV-4303 | Control Valve | Valve | 6 | Control Valve | 53.8 | 0.00107 |
| 75 | 25-08-2023 | 29-FV-4302 | Control Valve | Valve | 8 | Control Valve | 97.4 | 0.00167 |
| 76 | 25-08-2023 | 29-PA-MT-1001 A | Control Valve | Valve | 1 | Suc. Valve | 56.1 | 0.00111 |
| 77 | 25-08-2023 | 29-PA-MT-1001 B | Control Valve | Valve | 1 | Suc. Valve | 13.2 | 0.00038 |
| 78 | 25-08-2023 | 29-PA-MT-1001 C | Control Valve | Valve | 1 | Suc. Valve | 56.4 | 0.00111 |
| 79 | 25-08-2023 | 29-PA-MT-1001 A | Control Valve | Valve | 1 | Dis. Valve | 30.6 | 0.00071 |
| 80 | 25-08-2023 | 29-PA-MT-1001 B | Control Valve | Valve | 1 | Dis. Valve | 53.4 | 0.00107 |
| 81 | 25-08-2023 | 29-PA-MT-1001 C | Control Valve | Valve | 1 | Dis. Valve | 20.1 | 0.00052 |
| 82 | 25-08-2023 | 29-FV-7301 | Control Valve | Valve | 4 | Control Valve | 83.4 | 0.00149 |
| 83 | 25-08-2023 | 29-FV-7302 | Control Valve | Valve | 6 | Control Valve | 93.5 | 0.00162 |
| 84 | 25-08-2023 | 29-FV-7303 | Control Valve | Valve | 4 | Control Valve | 43.1 | 0.00091 |
| 85 | 25-08-2023 | 29-PCV-7401 | Control Valve | Valve | 4 | Control Valve | 25.6 | 0.00062 |
| 86 | 25-08-2023 | 29-PCV-7402 | Control Valve | Valve | 6 | Control Valve | 80.4 | 0.00145 |
| 87 | 25-08-2023 | 29-UV-7401 | Control Valve | Valve | 6 | Control Valve | 146.2 | 0.00227 |
| 88 | 25-08-2023 | 29-LV-7701 | Control Valve | Valve | 8 | Control Valve | 36.5 | 0.00080 |

# BHARAT PETROLEUM CORPORATION LIMITED, BINA-M.P.
## LDAR QUARTERLY REPORT FOR JULY 2023 TO SEPTEMBER 2023
### Monitoring - VOC Plant – SRU

| S.No. | Date | Tag. No. | Equipment | Component | Line size (inch) | Location | Screening Value sv (ppm) | Estimated Emission Rate kg/day |
|---|---|---|---|---|---|---|---|---|
| COMPONENT - VALVE | | | | | | | | |
| 89 | 25-08-2023 | 29-FV-7704 | Control Valve | Valve | 8 | Control Valve | 80.4 | 0.00145 |
| 90 | 25-08-2023 | 29-LV-7901 | Control Valve | Valve | 2 | Control Valve | 23.6 | 0.00058 |
| 91 | 25-08-2023 | 29-LV-8101 | Control Valve | Valve | 2 | Control Valve | 53.1 | 0.00106 |
| 92 | 25-08-2023 | 29-VV-V1-1001 | Control Valve | Valve | 36 | Inlet Control Valve | 46.5 | 0.00096 |
| 93 | 25-08-2023 | 29-VV-V1-1001 | Control Valve | Valve | 34 | Outlet Control Valve | 146.2 | 0.00227 |
| 94 | 25-08-2023 | 29-VV-00-1002 | Control Valve | Valve | 36 | Inlet Control Valve | 30.6 | 0.00071 |
| 95 | 25-08-2023 | 29-VV-00-1002 | Control Valve | Valve | 34 | Outlet Control Valve | 80.4 | 0.00145 |
| 96 | 25-08-2023 | 29-RB-00-1001 | Control Valve | Valve | 36 | Inlet Control Valve | 193.5 | 0.00279 |
| 97 | 25-08-2023 | 29-RB-00-1001 | Control Valve | Valve | 34 | Outlet Control Valve | 26.4 | 0.00063 |
| 98 | 25-08-2023 | 29-RB-00-1002 | Control Valve | Valve | 36 | Inlet Control Valve | 34.2 | 0.00077 |
| 99 | 25-08-2023 | 29-RB-00-1002 | Control Valve | Valve | 34 | Outlet Control Valve | 60.1 | 0.00117 |
| 100 | 25-08-2023 | 28-FV-2001 | Control Valve | Valve | 2 | Control Valve | 23.4 | 0.00058 |
| 101 | 25-08-2023 | 27-FV-1103 | Control Valve | Valve | 6 | Bypass Valve | 80.6 | 0.00145 |
| 102 | 25-08-2023 | 29-TV-2501 | Control Valve | Valve | 2 | Bypass Valve | 346.5 | 0.00431 |
| 103 | 25-08-2023 | 28-TV-2202 | Control Valve | Valve | 8 | Bypass Valve | 20.1 | 0.00052 |
| 104 | 25-08-2023 | 28-FV-2203 | Control Valve | Valve | 4 | Bypass Valve | 63.1 | 0.00121 |
| 105 | 25-08-2023 | 29-FV-4303 | Control Valve | Valve | 6 | Bypass Valve | 20.3 | 0.00052 |
| 106 | 25-08-2023 | 29-FV-4302 | Control Valve | Valve | 6 | Bypass Valve | 93.5 | 0.00162 |
| 107 | 25-08-2023 | 29-FV-7301 | Control Valve | Valve | 2 | Bypass Valve | 80.4 | 0.00145 |
| 108 | 25-08-2023 | 29-FV-7302 | Control Valve | Valve | 4 | Bypass Valve | 63.4 | 0.00121 |
| 109 | 25-08-2023 | 29-FV-7303 | Control Valve | Valve | 2 | Bypass Valve | 20.1 | 0.00052 |
| 110 | 25-08-2023 | 29-PCV-7401 | Control Valve | Valve | 2 | Bypass Valve | 39.8 | 0.00086 |
| 111 | 25-08-2023 | 29-PCV-7402 | Control Valve | Valve | 4 | Bypass Valve | 73.2 | 0.00135 |
| 112 | 25-08-2023 | 29-UV-7401 | Control Valve | Valve | 4 | Bypass Valve | 13.5 | 0.00038 |
| 113 | 25-08-2023 | 29-LV-7701 | Control Valve | Valve | 6 | Bypass Valve | 60.2 | 0.00117 |
| 114 | 25-08-2023 | 29-FV-7704 | Control Valve | Valve | 6 | Bypass Valve | 3.4 | 0.00014 |
| 115 | 25-08-2023 | 29-LV-7901 | Control Valve | Valve | 2 | Bypass Valve | 5.5 | 0.00020 |
| 116 | 25-08-2023 | 29-LV-8101 | Control Valve | Valve | 2 | Bypass Valve | 8.9 | 0.00028 |
| 117 | 25-08-2023 | 29-VV-V1-1001 | Inlet Control Valve | Valve | 34 | Bypass Valve | 13.4 | 0.00038 |
| 118 | 25-08-2023 | 29-VV-V1-1001 | Outlet Control Valve | Valve | 32 | Bypass Valve | 26.4 | 0.00063 |
| 119 | 25-08-2023 | 29-VV-00-1002 | Inlet Control Valve | Valve | 34 | Bypass Valve | 23.6 | 0.00058 |
| 120 | 25-08-2023 | 29-VV-00-1002 | Outlet Control Valve | Valve | 32 | Bypass Valve | 5.5 | 0.00020 |
| 121 | 25-08-2023 | 29-RB-00-1001 | Inlet Control Valve | Valve | 34 | Bypass Valve | 62.4 | 0.00120 |
| 122 | 25-08-2023 | 29-RB-00-1001 | Outlet Control Valve | Valve | 32 | Bypass Valve | 16.4 | 0.00044 |
| 123 | 25-08-2023 | 29-RB-00-1002 | Inlet Control Valve | Valve | 34 | Bypass Valve | 23.4 | 0.00058 |
| 124 | 25-08-2023 | 29-RB-00-1002 | Outlet Control Valve | Valve | 32 | Bypass Valve | 46.2 | 0.00096 |
| **Total VOC Emission from Valves** | | | | | | | | **0.12801** |

# BHARAT PETROLEUM CORPORATION LIMITED, BINA-M.P.
## LDAR QUARTERLY REPORT FOR JULY 2023 TO SEPTEMBER 2023
### Monitoring - VOC Plant – SRU

| S.No. | Date | Tag. No. | Equipment | Component | Line size (inch) | Location | Screening Value sv (ppm) | Estimated Emission Rate kg/day |
|---|---|---|---|---|---|---|---|---|
| COMPONENT - PSV | | | | | | | | |
| 1 | 25-08-2023 | 29-PSV-3501 | PSV | Flange | 6 | Inlet | 23.6 | 0.00102 |
| | 25-08-2023 | 29-PSV-3501 | PSV | Flange | 6 | Outlet | 90.4 | 0.00262 |
| 2 | 25-08-2023 | 29-PSV-4601 | PSV | Flange | 6 | Inlet | 156.2 | 0.00386 |
| | 25-08-2023 | 29-PSV-4601 | PSV | Flange | 6 | Outlet | 34.8 | 0.00134 |
| 3 | 25-08-2023 | 29-PSV-4203 | PSV | Flange | 6 | Inlet | 70.3 | 0.00220 |
| | 25-08-2023 | 29-PSV-4203 | PSV | Flange | 6 | Outlet | 63.4 | 0.00205 |
| 4 | 25-08-2023 | 29-PSV-4704 | PSV | Flange | 6 | Inlet | 46.3 | 0.00164 |
| | 25-08-2023 | 29-PSV-4704 | PSV | Flange | 6 | Outlet | 90.8 | 0.00263 |
| 5 | 25-08-2023 | 29-PSV-4701 | PSV | Flange | 4 | Inlet | 5.5 | 0.00037 |
| | 25-08-2023 | 29-PSV-4701 | PSV | Flange | 4 | Outlet | 143.2 | 0.00363 |
| 6 | 25-08-2023 | 29-PSV-4702 | PSV | Flange | 4 | Inlet | 90.7 | 0.00263 |
| | 25-08-2023 | 29-PSV-4702 | PSV | Flange | 4 | Outlet | 18.9 | 0.00087 |
| 7 | 25-08-2023 | 28-PSV-1301 A | PSV | Flange | 2 | Inlet | 89.1 | 0.00260 |
| | 25-08-2023 | 28-PSV-1301 A | PSV | Flange | 2 | Outlet | 80.3 | 0.00242 |
| 8 | 25-08-2023 | 28-PSV1301 B | PSV | Flange | 2 | Inlet | 125.6 | 0.00331 |
| | 25-08-2023 | 28-PSV1301 B | PSV | Flange | 2 | Outlet | 93.1 | 0.00268 |
| 9 | 25-08-2023 | 28-PSV-1901 A | PSV | Flange | 8 | Inlet | 40.2 | 0.00148 |
| | 25-08-2023 | 28-PSV-1901 A | PSV | Flange | 8 | Outlet | 1.5 | 0.00015 |
| 10 | 25-08-2023 | 28-PSV-1901 B | PSV | Flange | 8 | Inlet | 63.4 | 0.00205 |
| | 25-08-2023 | 28-PSV-1901 B | PSV | Flange | 8 | Outlet | 23.6 | 0.00102 |
| 11 | 25-08-2023 | 28-PSV-2101 A | PSV | Flange | 8 | Inlet | 53.1 | 0.00181 |
| | 25-08-2023 | 28-PSV-2101 A | PSV | Flange | 8 | Outlet | 90.4 | 0.00262 |
| 12 | 25-08-2023 | 28-PSV-2101 B | PSV | Flange | 10 | Inlet | 5.6 | 0.00037 |
| | 25-08-2023 | 28-PSV-2101 B | PSV | Flange | 10 | Outlet | 32.1 | 0.00127 |
| 13 | 25-08-2023 | 28-PSV-1101 A | PSV | Flange | 4 | Inlet | 80.4 | 0.00242 |
| | 25-08-2023 | 28-PSV-1101 A | PSV | Flange | 4 | Outlet | 13.6 | 0.00069 |
| 14 | 25-08-2023 | 28-PSV-1101 B | PSV | Flange | 4 | Inlet | 3.5 | 0.00027 |
| | 25-08-2023 | 28-PSV-1101 B | PSV | Flange | 4 | Outlet | 126.3 | 0.00332 |
| 15 | 25-08-2023 | 28-PSV-1601 A | PSV | Flange | 10 | Inlet | 40.3 | 0.00149 |
| | 25-08-2023 | 28-PSV-1601 A | PSV | Flange | 10 | Outlet | 31.2 | 0.00124 |
| 16 | 25-08-2023 | 28-PSV-1601 B | PSV | Flange | 10 | Inlet | 80.6 | 0.00242 |
| | 25-08-2023 | 28-PSV-1601 B | PSV | Flange | 10 | Outlet | 6.4 | 0.00041 |
| 17 | 25-08-2023 | 28-PSV-1901 | PSV | Flange | 4 | Inlet | 13.5 | 0.00069 |
| | 25-08-2023 | 28-PSV-1901 | PSV | Flange | 4 | Outlet | 62.1 | 0.00202 |
| 18 | 25-08-2023 | 28-PSV-1602 | PSV | Flange | 4 | Inlet | 813.5 | 0.01230 |
| | 25-08-2023 | 28-PSV-1602 | PSV | Flange | 4 | Outlet | 62.4 | 0.00202 |
| 19 | 25-08-2023 | 27-PSV-1103 | PSV | Flange | 8 | Inlet | 80.6 | 0.00242 |
| | 25-08-2023 | 27-PSV-1103 | PSV | Flange | 8 | Outlet | 6.6 | 0.00042 |
| 20 | 25-08-2023 | 27-PSV-1701 | PSV | Flange | 8 | Inlet | 43.1 | 0.00156 |
| | 25-08-2023 | 27-PSV-1701 | PSV | Flange | 8 | Outlet | 20.6 | 0.00093 |
| 21 | 25-08-2023 | 27-PSV-1702 | PSV | Flange | 6 | Inlet | 3.5 | 0.00027 |
| | 25-08-2023 | 27-PSV-1702 | PSV | Flange | 6 | Outlet | 126.6 | 0.00333 |
| 22 | 25-08-2023 | 27-PSV-1703 | PSV | Flange | 2 | Inlet | 34.6 | 0.00134 |
| | 25-08-2023 | 27-PSV-1703 | PSV | Flange | 2 | Outlet | 53.7 | 0.00182 |

# BHARAT PETROLEUM CORPORATION LIMITED, BINA-M.P.
## LDAR QUARTERLY REPORT FOR JULY 2023 TO SEPTEMBER 2023
### Monitoring - VOC Plant – SRU

| S.No. | Date | Tag. No. | Equipment | Component | Line size (inch) | Location | Screening Value sv (ppm) | Estimated Emission Rate kg/day |
|---|---|---|---|---|---|---|---|---|
| COMPONENT - PSV | | | | | | | | |
| 23 | 25-08-2023 | 27-PSV-3615 C | PSV | Flange | 3 | Inlet | 90.1 | 0.00262 |
| | 25-08-2023 | 27-PSV-3615 C | PSV | Flange | 3 | Outlet | 15.4 | 0.00076 |
| 24 | 25-08-2023 | 27-PSV-3615 A | PSV | Flange | 4 | Inlet | 63.1 | 0.00204 |
| | 25-08-2023 | 27-PSV-3615 A | PSV | Flange | 4 | Outlet | 23.6 | 0.00102 |
| 25 | 25-08-2023 | 27-PSV-3615 B | PSV | Flange | 10 | Inlet | 30.6 | 0.00123 |
| | 25-08-2023 | 27-PSV-3615 B | PSV | Flange | 10 | Outlet | 53.8 | 0.00182 |
| 26 | 25-08-2023 | 27-PSV-3601 B | PSV | Flange | 10 | Inlet | 2.9 | 0.00023 |
| | 25-08-2023 | 27-PSV-3601 B | PSV | Flange | 10 | Outlet | 83.1 | 0.00247 |
| 27 | 25-08-2023 | 27-PSV-1101 | PSV | Flange | 6 | Inlet | 46.2 | 0.00164 |
| | 25-08-2023 | 27-PSV-1101 | PSV | Flange | 6 | Outlet | 30.6 | 0.00123 |
| 28 | 25-08-2023 | 27-PSV-1401 | PSV | Flange | 2 | Inlet | 70.4 | 0.00220 |
| | 25-08-2023 | 27-PSV-1401 | PSV | Flange | 2 | Outlet | 6.5 | 0.00041 |
| 29 | 25-08-2023 | 27-PSV-1102 A | PSV | Flange | 2 | Inlet | 13.4 | 0.00069 |
| | 25-08-2023 | 27-PSV-1102 A | PSV | Flange | 2 | Outlet | 50.6 | 0.00175 |
| 30 | 25-08-2023 | 27-PSV-1102 B | PSV | Flange | 2 | Inlet | 36.5 | 0.00139 |
| | 25-08-2023 | 27-PSV-1102 B | PSV | Flange | 2 | Outlet | 80.4 | 0.00242 |
| 31 | 25-08-2023 | 27-PSV-1501 | PSV | Flange | 2 | Inlet | 23.6 | 0.00102 |
| | 25-08-2023 | 27-PSV-1501 | PSV | Flange | 2 | Outlet | 6.4 | 0.00041 |
| 32 | 25-08-2023 | 29-PSV-1702 | PSV | Flange | 4 | Inlet | 2.3 | 0.00020 |
| | 25-08-2023 | 29-PSV-1702 | PSV | Flange | 4 | Outlet | 61.2 | 0.00200 |
| 33 | 25-08-2023 | 29-PSV-1701 | PSV | Flange | 2 | Inlet | 50.3 | 0.00174 |
| | 25-08-2023 | 29-PSV-1701 | PSV | Flange | 2 | Outlet | 62.1 | 0.00202 |
| 34 | 25-08-2023 | 29-PSV-2101 | PSV | Flange | 10 | Inlet | 156.3 | 0.00386 |
| | 25-08-2023 | 29-PSV-2101 | PSV | Flange | 10 | Outlet | 3.4 | 0.00026 |
| 35 | 25-08-2023 | 29-PSV-1201 | PSV | Flange | 10 | Inlet | 120.6 | 0.00321 |
| | 25-08-2023 | 29-PSV-1201 | PSV | Flange | 10 | Outlet | 53.4 | 0.00181 |
| 36 | 25-08-2023 | 28-PSV-3601 B | PSV | Flange | 10 | Inlet | 5.5 | 0.00037 |
| | 25-08-2023 | 28-PSV-3601 B | PSV | Flange | 10 | Outlet | 63.4 | 0.00205 |
| 37 | 25-08-2023 | 29-PSV-8501 A | PSV | Flange | 1 | Inlet | 53.1 | 0.00181 |
| | 25-08-2023 | 29-PSV-8501 A | PSV | Flange | 1 | Outlet | 20.6 | 0.00093 |
| 38 | 25-08-2023 | 29-PSV-8501 B | PSV | Flange | 1 | Inlet | 93.4 | 0.00269 |
| | 25-08-2023 | 29-PSV-8501 B | PSV | Flange | 1 | Outlet | 23.6 | 0.00102 |
| 39 | 25-08-2023 | 29-PSV-8501 C | PSV | Flange | 1 | Inlet | 53.1 | 0.00181 |
| | 25-08-2023 | 29-PSV-8501 C | PSV | Flange | 1 | Outlet | 30.6 | 0.00123 |
| 40 | 25-08-2023 | 29-PSV-8502 A | PSV | Flange | 1 | Inlet | 6.9 | 0.00043 |
| | 25-08-2023 | 29-PSV-8502 A | PSV | Flange | 1 | Outlet | 83.1 | 0.00247 |
| 41 | 25-08-2023 | 29-PSV-8502 B | PSV | Flange | 1 | Inlet | 43.5 | 0.00157 |
| | 25-08-2023 | 29-PSV-8502 B | PSV | Flange | 1 | Outlet | 83.4 | 0.00248 |
| 42 | 25-08-2023 | 29-PSV-8502 C | PSV | Flange | 1 | Inlet | 13.6 | 0.00069 |
| | 25-08-2023 | 29-PSV-8502 C | PSV | Flange | 1 | Outlet | 5.5 | 0.00037 |
| 43 | 25-08-2023 | 29-PSV-1101 | PSV | Flange | 1 | Inlet | 71.2 | 0.00222 |
| | 25-08-2023 | 29-PSV-1101 | PSV | Flange | 1 | Outlet | 56.4 | 0.00188 |
| 44 | 25-08-2023 | 29-PSV-1201 | PSV | Flange | 1 | Inlet | 23.6 | 0.00102 |
| | 25-08-2023 | 29-PSV-1201 | PSV | Flange | 1 | Outlet | 9.6 | 0.00054 |

# BHARAT PETROLEUM CORPORATION LIMITED, BINA-M.P.
## LDAR QUARTERLY REPORT FOR JULY 2023 TO SEPTEMBER 2023
### Monitoring - VOC Plant – SRU

| S.No. | Date | Tag. No. | Equipment | Component | Line size (inch) | Location | Screening Value sv (ppm) | Estimated Emission Rate kg/day |
|---|---|---|---|---|---|---|---|---|
| COMPONENT - PSV | | | | | | | | |
| 45 | 25-08-2023 | 29-PSV-1202 | PSV | Flange | 6 | Inlet | 143.6 | 0.00363 |
| | 25-08-2023 | 29-PSV-1202 | PSV | Flange | 6 | Outlet | 61.2 | 0.00200 |
| 46 | 25-08-2023 | 29-PSV-1203 | PSV | Flange | 4 | Inlet | 70.4 | 0.00220 |
| | 25-08-2023 | 29-PSV-1203 | PSV | Flange | 4 | Outlet | 93.6 | 0.00269 |
| 47 | 25-08-2023 | 29-PSV-2101 | PSV | Flange | 2 | Inlet | 31.2 | 0.00124 |
| | 25-08-2023 | 29-PSV-2101 | PSV | Flange | 2 | Outlet | 60.5 | 0.00198 |
| 48 | 25-08-2023 | 29-PSV-2701 | PSV | Flange | 4 | Inlet | 43.1 | 0.00156 |
| | 25-08-2023 | 29-PSV-2701 | PSV | Flange | 4 | Outlet | 4.4 | 0.00031 |
| 49 | 25-08-2023 | 29-PSV-3501 | PSV | Flange | 6 | Inlet | 30.1 | 0.00121 |
| | 25-08-2023 | 29-PSV-3501 | PSV | Flange | 6 | Outlet | 26.4 | 0.00110 |
| 50 | 25-08-2023 | 29-PSV-3502 A | PSV | Flange | 4 | Inlet | 70.1 | 0.00220 |
| | 25-08-2023 | 29-PSV-3502 A | PSV | Flange | 4 | Outlet | 23.6 | 0.00102 |
| 51 | 25-08-2023 | 29-PSV-3502 B | PSV | Flange | 4 | Inlet | 5.4 | 0.00036 |
| | 25-08-2023 | 29-PSV-3502 B | PSV | Flange | 4 | Outlet | 80.2 | 0.00241 |
| 52 | 25-08-2023 | 29-PSV-3503 A | PSV | Flange | 8 | Inlet | 31.4 | 0.00125 |
| | 25-08-2023 | 29-PSV-3503 A | PSV | Flange | 8 | Outlet | 26.5 | 0.00111 |
| 53 | 25-08-2023 | 29-PSV-3503 B | PSV | Flange | 6 | Inlet | 34.2 | 0.00133 |
| | 25-08-2023 | 29-PSV-3503 B | PSV | Flange | 6 | Outlet | 51.4 | 0.00176 |
| Total VOC emission from PSV | | | | | | | | 0.18335 |

# BHARAT PETROLEUM CORPORATION LIMITED, BINA-M.P.
## LDAR QUARTERLY REPORT FOR JULY 2023 TO SEPTEMBER 2023
### Monitoring - VOC Plant – SRU

| S.No. | Date | Tag. No. | Equipment | Component | Line size (inch) | Location | Screening Value sv (ppm) | Estimated Emission Rate kg/day |
|---|---|---|---|---|---|---|---|---|
| COMPONENT - EXCHANGER | | | | | | | | |
| 1 | 25-08-2023 | 28-EE-00-101 A | Exchanger | Flange | 8 | Inlet | 41.2 | 0.00151 |
| | 25-08-2023 | 28-EE-00-101 A | Exchanger | Flange | 6 | Outlet | 56.2 | 0.00188 |
| 2 | 25-08-2023 | 28-EE-00-101 B | Exchanger | Flange | 8 | Inlet | 36.5 | 0.00139 |
| | 25-08-2023 | 28-EE-00-101 B | Exchanger | Flange | 6 | Outlet | 30.4 | 0.00122 |
| 3 | 25-08-2023 | 28-EE-00-203 A | Exchanger | Flange | 6 | Inlet | 13.6 | 0.00069 |
| | 25-08-2023 | 28-EE-00-203 A | Exchanger | Flange | 6 | Outlet | 50.2 | 0.00174 |
| 4 | 25-08-2023 | 28-EE-00-203 B | Exchanger | Flange | 6 | Inlet | 156.2 | 0.00386 |
| | 25-08-2023 | 28-EE-00-203 B | Exchanger | Flange | 6 | Outlet | 3.6 | 0.00027 |
| 5 | 25-08-2023 | 28-EE-00-202 A | Exchanger | Flange | 6 | Inlet | 20.1 | 0.00091 |
| | 25-08-2023 | 28-EE-00-202 A | Exchanger | Flange | 6 | Outlet | 14.3 | 0.00072 |
| 6 | 25-08-2023 | 28-EE-00-202 B | Exchanger | Flange | 6 | Inlet | 26.5 | 0.00111 |
| | 25-08-2023 | 28-EE-00-202 B | Exchanger | Flange | 6 | Outlet | 63.1 | 0.00204 |
| 7 | 25-08-2023 | 28-EE-00-208 A | Exchanger | Flange | 6 | Inlet | 20.2 | 0.00092 |
| | 25-08-2023 | 28-EE-00-208 A | Exchanger | Flange | 6 | Outlet | 36.5 | 0.00139 |
| 8 | 25-08-2023 | 28-EE-00-208 B | Exchanger | Flange | 6 | Inlet | 71.2 | 0.00222 |
| | 25-08-2023 | 28-EE-00-208 B | Exchanger | Flange | 6 | Outlet | 56.5 | 0.00189 |
| 9 | 25-08-2023 | 28-EE-00-104 A/B | Exchanger | Flange | 10 | Inlet | 89.5 | 0.00261 |
| | 25-08-2023 | 28-EE-00-104 A/B | Exchanger | Flange | 8 | Outlet | 6.3 | 0.00040 |
| 10 | 25-08-2023 | 27-EE-00-AS-105 A/B | Exchanger | Flange | 18 | Inlet | 23.1 | 0.00101 |
| | 25-08-2023 | 27-EE-00-AS-105 A/B | Exchanger | Flange | 14 | Outlet | 93.6 | 0.00269 |
| 11 | 25-08-2023 | 27-EE-00-AS-101 A/B | Exchanger | Flange | 20 | Inlet | 13.5 | 0.00069 |
| | 25-08-2023 | 27-EE-00-AS-101 A/B | Exchanger | Flange | 18 | Outlet | 26.4 | 0.00110 |
| 12 | 25-08-2023 | 29-EE-00-019 A/B | Exchanger | Flange | 16 | Inlet | 125.3 | 0.00330 |
| | 25-08-2023 | 29-EE-00-019 A/B | Exchanger | Flange | 14 | Outlet | 16.5 | 0.00079 |
| 13 | 25-08-2023 | 29-EE-00-015 A/B | Exchanger | Flange | 16 | Inlet | 20.3 | 0.00092 |
| | 25-08-2023 | 29-EE-00-015 A/B | Exchanger | Flange | 14 | Outlet | 46.5 | 0.00164 |
| 14 | 25-08-2023 | 29-EE-00-022 | Exchanger | Flange | 16 | Inlet | 80.4 | 0.00242 |
| | 25-08-2023 | 29-EE-00-022 | Exchanger | Flange | 14 | Outlet | 56.1 | 0.00188 |
| 15 | 25-08-2023 | 29-EE-00-020 | Exchanger | Flange | 16 | Inlet | 23.2 | 0.00101 |
| | 25-08-2023 | 29-EE-00-020 | Exchanger | Flange | 14 | Outlet | 163.2 | 0.00398 |
| 16 | 25-08-2023 | 29-EE-00-014 | Exchanger | Flange | 12 | Inlet | 90.4 | 0.00262 |
| | 25-08-2023 | 29-EE-00-014 | Exchanger | Flange | 10 | Outlet | 73.6 | 0.00227 |
| 17 | 25-08-2023 | 29-EE-00-102 A | Exchanger | Flange | 16 | Inlet | 6.6 | 0.00042 |
| | 25-08-2023 | 29-EE-00-102 A | Exchanger | Flange | 14 | Outlet | 12.3 | 0.00065 |
| 18 | 25-08-2023 | 29-EE-00-102 B | Exchanger | Flange | 16 | Inlet | 613.2 | 0.01008 |
| | 25-08-2023 | 29-EE-00-102 B | Exchanger | Flange | 14 | Outlet | 30.2 | 0.00121 |
| 19 | 25-08-2023 | 28-EE-00-206 A | Exchanger | Flange | 18 | Inlet | 50.4 | 0.00174 |
| | 25-08-2023 | 28-EE-00-206 A | Exchanger | Flange | 16 | Outlet | 83.4 | 0.00248 |
| 20 | 25-08-2023 | 28-EE-00-206 B | Exchanger | Flange | 18 | Inlet | 63.3 | 0.00204 |
| | 25-08-2023 | 28-EE-00-206 B | Exchanger | Flange | 16 | Outlet | 26.5 | 0.00111 |
| 21 | 25-08-2023 | 28-EE-00-103 A | Exchanger | Flange | 12 | Inlet | 43.1 | 0.00156 |
| | 25-08-2023 | 28-EE-00-103 A | Exchanger | Flange | 10 | Outlet | 20.3 | 0.00092 |
| 22 | 25-08-2023 | 28-EE-00-103 B | Exchanger | Flange | 10 | Inlet | 16.5 | 0.00079 |
| | 25-08-2023 | 28-EE-00-103 B | Exchanger | Flange | 8 | Outlet | 2.1 | 0.00019 |

# BHARAT PETROLEUM CORPORATION LIMITED, BINA-M.P.
## LDAR QUARTERLY REPORT FOR JULY 2023 TO SEPTEMBER 2023
### Monitoring - VOC Plant – SRU

| S.No. | Date | Tag. No. | Equipment | Component | Line size (inch) | Location | Screening Value sv (ppm) | Estimated Emission Rate kg/day |
|---|---|---|---|---|---|---|---|---|
| COMPONENT - EXCHANGER | | | | | | | | |
| 23 | 25-08-2023 | 28-EE-00-105 A | Exchanger | Flange | 10 | Inlet | 83.4 | 0.00248 |
| | 25-08-2023 | 28-EE-00-105 A | Exchanger | Flange | 8 | Outlet | 56.5 | 0.00189 |
| 24 | 25-08-2023 | 28-EE-00-105 B | Exchanger | Flange | 10 | Inlet | 26.1 | 0.00110 |
| | 25-08-2023 | 28-EE-00-105 B | Exchanger | Flange | 8 | Outlet | 23.4 | 0.00102 |
| 25 | 25-08-2023 | 28-EE-00-106 A/B | Exchanger | Flange | 10 | Inlet | 80.9 | 0.00243 |
| | 25-08-2023 | 28-EE-00-106 A/B | Exchanger | Flange | 8 | Outlet | 63.4 | 0.00205 |
| 26 | 25-08-2023 | 29-EE-00-20 A/B | Exchanger | Flange | 10 | Inlet | 56.4 | 0.00188 |
| | 25-08-2023 | 29-EE-00-20 A/B | Exchanger | Flange | 8 | Outlet | 23.8 | 0.00103 |
| 27 | 25-08-2023 | 29-EE-00-14 A | Exchanger | Flange | 12 | Inlet | 73.1 | 0.00226 |
| | 25-08-2023 | 29-EE-00-14 A | Exchanger | Flange | 10 | Outlet | 60.2 | 0.00197 |
| 28 | 25-08-2023 | 29-EE-00-14 B | Exchanger | Flange | 12 | Inlet | 26.4 | 0.00110 |
| | 25-08-2023 | 29-EE-00-14 B | Exchanger | Flange | 10 | Outlet | 3.1 | 0.00025 |
| 29 | 25-08-2023 | 29-EE-00-13 A | Exchanger | Flange | 18 | Inlet | 93.4 | 0.00269 |
| | 25-08-2023 | 29-EE-00-13 A | Exchanger | Flange | 16 | Outlet | 6.1 | 0.00039 |
| 30 | 25-08-2023 | 29-EE-00-13 B | Exchanger | Flange | 18 | Inlet | 23.4 | 0.00102 |
| | 25-08-2023 | 29-EE-00-13 B | Exchanger | Flange | 16 | Outlet | 156.2 | 0.00386 |
| 31 | 25-08-2023 | 27-EE-00-103 A | Exchanger | Flange | 18 | Inlet | 6.4 | 0.00041 |
| | 25-08-2023 | 27-EE-00-103 A | Exchanger | Flange | 16 | Outlet | 301.2 | 0.00612 |
| 32 | 25-08-2023 | 27-EE-00-103 B | Exchanger | Flange | 18 | Inlet | 63.2 | 0.00204 |
| | 25-08-2023 | 27-EE-00-103 B | Exchanger | Flange | 16 | Outlet | 80.2 | 0.00241 |
| 33 | 25-08-2023 | 27-EE-00-105 A/B | Exchanger | Flange | 6 | Inlet | 16.9 | 0.00081 |
| | 25-08-2023 | 27-EE-00-105 A/B | Exchanger | Flange | 6 | Outlet | 86.7 | 0.00255 |
| 34 | 25-08-2023 | 27-EE-00-105 C | Exchanger | Flange | 6 | Inlet | 63.4 | 0.00205 |
| | 25-08-2023 | 27-EE-00-105 C | Exchanger | Flange | 4 | Outlet | 89.4 | 0.00260 |
| 35 | 25-08-2023 | 27-EE-00-105 D | Exchanger | Flange | 6 | Inlet | 156.3 | 0.00386 |
| | 25-08-2023 | 27-EE-00-105 D | Exchanger | Flange | 4 | Outlet | 63.2 | 0.00204 |
| 36 | 25-08-2023 | 27-EE-00-106 A/B | Exchanger | Flange | 12 | Inlet | 96.1 | 0.00274 |
| | 25-08-2023 | 27-EE-00-106 A/B | Exchanger | Flange | 10 | Outlet | 23.7 | 0.00102 |
| 37 | 25-08-2023 | 27-EE-00-106 C | Exchanger | Flange | 8 | Inlet | 89.4 | 0.00260 |
| | 25-08-2023 | 27-EE-00-106 C | Exchanger | Flange | 6 | Outlet | 16.3 | 0.00079 |
| 38 | 25-08-2023 | 29-EE-00-15 A | Exchanger | Flange | 8 | Inlet | 90.1 | 0.00262 |
| | 25-08-2023 | 29-EE-00-15 A | Exchanger | Flange | 6 | Outlet | 23.3 | 0.00101 |
| 39 | 25-08-2023 | 29-EE-00-15 B | Exchanger | Flange | 8 | Inlet | 6.1 | 0.00039 |
| | 25-08-2023 | 29-EE-00-15 B | Exchanger | Flange | 6 | Outlet | 43.2 | 0.00156 |
| 40 | 25-08-2023 | 29-EE-00-16 A | Exchanger | Flange | 10 | Inlet | 8.1 | 0.00048 |
| | 25-08-2023 | 29-EE-00-16 A | Exchanger | Flange | 8 | Outlet | 10.5 | 0.00058 |
| 41 | 25-08-2023 | 29-EE-00-16 B | Exchanger | Flange | 10 | Inlet | 62.4 | 0.00202 |
| | 25-08-2023 | 29-EE-00-16 B | Exchanger | Flange | 8 | Outlet | 986.3 | 0.01408 |
| 42 | 25-08-2023 | 29-EE-00-11 A | Exchanger | Flange | 10 | Inlet | 71.4 | 0.00222 |
| | 25-08-2023 | 29-EE-00-11 A | Exchanger | Flange | 8 | Outlet | 23.6 | 0.00102 |
| 43 | 25-08-2023 | 29-EE-00-11 B | Exchanger | Flange | 10 | Inlet | 6.6 | 0.00042 |
| | 25-08-2023 | 29-EE-00-11 B | Exchanger | Flange | 8 | Outlet | 53.1 | 0.00181 |
| 44 | 25-08-2023 | 29-EE-00-11 C | Exchanger | Flange | 12 | Inlet | 20.3 | 0.00092 |
| | 25-08-2023 | 29-EE-00-11 C | Exchanger | Flange | 10 | Outlet | 6.9 | 0.00043 |

# BHARAT PETROLEUM CORPORATION LIMITED, BINA-M.P.
## LDAR QUARTERLY REPORT FOR JULY 2023 TO SEPTEMBER 2023
### Monitoring - VOC Plant – SRU

| S.No. | Date | Tag. No. | Equipment | Component | Line size (inch) | Location | Screening Value sv (ppm) | Estimated Emission Rate kg/day |
|---|---|---|---|---|---|---|---|---|
| **COMPONENT - EXCHANGER** | | | | | | | | |
| 45 | 25-08-2023 | 29-EE-00-1001 | Exchanger | Flange | 20 | Inlet | 61.4 | 0.00200 |
| | 25-08-2023 | 29-EE-00-1001 | Exchanger | Flange | 18 | Outlet | 23.3 | 0.00101 |
| 46 | 25-08-2023 | 29-EE-00-1002 | Exchanger | Flange | 20 | Inlet | 63.3 | 0.00204 |
| | 25-08-2023 | 29-EE-00-1002 | Exchanger | Flange | 18 | Outlet | 30.1 | 0.00121 |
| 47 | 25-08-2023 | 29-EE-00-1003 | Exchanger | Flange | 20 | Inlet | 26.5 | 0.00111 |
| | 25-08-2023 | 29-EE-00-1003 | Exchanger | Flange | 18 | Outlet | 50.1 | 0.00173 |
| 48 | 25-08-2023 | 29-EE-00-1004 | Exchanger | Flange | 20 | Inlet | 23.6 | 0.00102 |
| | 25-08-2023 | 29-EE-00-1004 | Exchanger | Flange | 18 | Outlet | 6.4 | 0.00041 |
| **Total VOC Emission from Exchanger** | | | | | | | | **0.17580** |
| **COMPONENT - COMPRESSOR** | | | | | | | | |
| 1 | 25-08-2023 | 29-KA-CF-1001 | Compessor | Pump Seals | - | Compessor | 163.2 | **0.02701** |

**Total VOC Emission from SRU in Quarter July 2023 to September 2023 is 0.51417 kg/day**

# BHARAT PETROLEUM CORPORATION LIMITED, BINA-M.P.
## LDAR QUARTERLY REPORT FOR JULY 2023 TO SEPTEMBER 2023
### Monitoring - VOC Plant – DCU

| S.No. | Date | Tag. No. | Equipment | Component | Line size (inch) | Location | Screening Value sv (ppm) | Estimated Emission Rate kg/day |
|---|---|---|---|---|---|---|---|---|
| COMPONENT - VALVE | | | | | | | | |
| 1 | 21-08-2023 | 14-PA-CF-101 B | Pump Valve | Valve | 8 | Suc. Valve | 123.6 | 0.00200 |
| 2 | 21-08-2023 | 14-PA-CF-101 A | Pump Valve | Valve | 8 | Suc. Valve | 50.6 | 0.00103 |
| 3 | 21-08-2023 | 14-PA-CF-108 B | Pump Valve | Valve | 8 | Suc. Valve | 80.8 | 0.00146 |
| 4 | 21-08-2023 | 14-PA-CF-108 A | Pump Valve | Valve | 8 | Suc. Valve | 18.4 | 0.00048 |
| 5 | 21-08-2023 | 14-PA-CF-141 B | Pump Valve | Valve | 6 | Suc. Valve | 185.6 | 0.00271 |
| 6 | 21-08-2023 | 14-PA-CF-141 A | Pump Valve | Valve | 6 | Suc. Valve | 65.2 | 0.00124 |
| 7 | 21-08-2023 | 14-PA-CF-105 B | Pump Valve | Valve | 10 | Suc. Valve | 13.5 | 0.00038 |
| 8 | 21-08-2023 | 14-PA-CF-105 A | Pump Valve | Valve | 8 | Suc. Valve | 63.1 | 0.00121 |
| 9 | 21-08-2023 | 14-PA-CF-122 B | Pump Valve | Valve | 8 | Suc. Valve | 20.5 | 0.00052 |
| 10 | 21-08-2023 | 14-PA-CF-122 A | Pump Valve | Valve | 12 | Suc. Valve | 80.6 | 0.00145 |
| 11 | 21-08-2023 | 14-PA-CF-121 B | Pump Valve | Valve | 12 | Suc. Valve | 35.9 | 0.00079 |
| 12 | 21-08-2023 | 14-PA-CF-121 A | Pump Valve | Valve | 8 | Suc. Valve | 145.6 | 0.00226 |
| 13 | 21-08-2023 | 14-PA-CF-106 B | Pump Valve | Valve | 8 | Suc. Valve | 32.5 | 0.00074 |
| 14 | 21-08-2023 | 14-PA-CF-106 A | Pump Valve | Valve | 6 | Suc. Valve | 80.6 | 0.00145 |
| 15 | 21-08-2023 | 14-PA-CF-107 B | Pump Valve | Valve | 6 | Suc. Valve | 5.2 | 0.00019 |
| 16 | 21-08-2023 | 14-PA-CF-107 A | Pump Valve | Valve | 8 | Suc. Valve | 13.6 | 0.00039 |
| 17 | 21-08-2023 | 14-PA-CF-104 B | Pump Valve | Valve | 8 | Suc. Valve | 80.5 | 0.00145 |
| 18 | 21-08-2023 | 14-PA-CF-104 A | Pump Valve | Valve | 12 | Suc. Valve | 16.4 | 0.00044 |
| 19 | 21-08-2023 | 14-PA-CF-102 B | Pump Valve | Valve | 12 | Suc. Valve | 52.5 | 0.00106 |
| 20 | 21-08-2023 | 14-PA-CF-102 A | Pump Valve | Valve | 10 | Suc. Valve | 6.3 | 0.00022 |
| 21 | 21-08-2023 | 14-PA-CF-109 B | Pump Valve | Valve | 10 | Suc. Valve | 13.5 | 0.00038 |
| 22 | 21-08-2023 | 14-PA-CF-109 A | Pump Valve | Valve | 4 | Suc. Valve | 80.4 | 0.00145 |
| 23 | 21-08-2023 | 14-PA-CF-111 B | Pump Valve | Valve | 4 | Suc. Valve | 6.3 | 0.00022 |
| 24 | 21-08-2023 | 14-PA-CF-111 A | Pump Valve | Valve | 8 | Suc. Valve | 25.1 | 0.00061 |
| 25 | 21-08-2023 | 14-PA-CF-113 B | Pump Valve | Valve | 8 | Suc. Valve | 146.5 | 0.00227 |
| 26 | 21-08-2023 | 14-PA-CF-113 A | Pump Valve | Valve | 10 | Suc. Valve | 23.5 | 0.00058 |
| 27 | 21-08-2023 | 14-PA-CF-112 B | Pump Valve | Valve | 10 | Suc. Valve | 63.2 | 0.00121 |
| 28 | 21-08-2023 | 14-PA-CF-112 A | Pump Valve | Valve | 4 | Suc. Valve | 60.1 | 0.00117 |
| 29 | 21-08-2023 | 14-PA-CF-101 B | Pump Valve | Valve | 4 | Dis. Valve | 23.5 | 0.00058 |
| 30 | 21-08-2023 | 14-PA-CF-101 A | Pump Valve | Valve | 6 | Dis. Valve | 90.4 | 0.00158 |
| 31 | 21-08-2023 | 14-PA-CF-108-B | Pump Valve | Valve | 6 | Dis. Valve | 56.1 | 0.00111 |
| 32 | 21-08-2023 | 14-PA-CF-108 A | Pump Valve | Valve | 6 | Dis. Valve | 32.2 | 0.00073 |
| 33 | 21-08-2023 | 14-PA-CF-141 B | Pump Valve | Valve | 6 | Dis. Valve | 3.1 | 0.00013 |
| 34 | 21-08-2023 | 14-PA-CF-141 A | Pump Valve | Valve | 4 | Dis. Valve | 20.5 | 0.00052 |
| 35 | 21-08-2023 | 14-PA-CF-105 B | Pump Valve | Valve | 4 | Dis. Valve | 63.5 | 0.00122 |
| 36 | 21-08-2023 | 14-PA-CF-105 A | Pump Valve | Valve | 8 | Dis. Valve | 80.4 | 0.00145 |
| 37 | 21-08-2023 | 14-PA-CF-122 B | Pump Valve | Valve | 6 | Dis. Valve | 56.2 | 0.00111 |
| 38 | 21-08-2023 | 14-PA-CF-122 A | Pump Valve | Valve | 8 | Dis. Valve | 166.5 | 0.00250 |
| 39 | 21-08-2023 | 14-PA-CF-121 B | Pump Valve | Valve | 8 | Dis. Valve | 23.5 | 0.00058 |
| 40 | 21-08-2023 | 14-PA-CF-121 A | Pump Valve | Valve | 6 | Dis. Valve | 93.1 | 0.00162 |
| 41 | 21-08-2023 | 14-PA-CF-106 B | Pump Valve | Valve | 6 | Dis. Valve | 25.4 | 0.00061 |
| 42 | 21-08-2023 | 14-PA-CF-106 A | Pump Valve | Valve | 4 | Dis. Valve | 65.2 | 0.00124 |
| 43 | 21-08-2023 | 14-PA-CF-107 B | Pump Valve | Valve | 4 | Dis. Valve | 13.5 | 0.00038 |
| 44 | 21-08-2023 | 14-PA-CF-107 A | Pump Valve | Valve | 6 | Dis. Valve | 69.6 | 0.00130 |

# BHARAT PETROLEUM CORPORATION LIMITED, BINA-M.P.
## LDAR QUARTERLY REPORT FOR JULY 2023 TO SEPTEMBER 2023
### Monitoring - VOC Plant – DCU

| S.No. | Date | Tag. No. | Equipment | Component | Line size (inch) | Location | Screening Value sv (ppm) | Estimated Emission Rate kg/day |
|---|---|---|---|---|---|---|---|---|
| COMPONENT - VALVE | | | | | | | | |
| 45 | 21-08-2023 | 14-PA-CF-104 B | Pump Valve | Valve | 6 | Dis. Valve | 80.4 | 0.00145 |
| 46 | 21-08-2023 | 14-PA-CF-104 A | Pump Valve | Valve | 10 | Dis. Valve | 13.5 | 0.00038 |
| 47 | 21-08-2023 | 14-PA-CF-102 B | Pump Valve | Valve | 10 | Dis. Valve | 66.5 | 0.00126 |
| 48 | 21-08-2023 | 14-PA-CF-102 A | Pump Valve | Valve | 8 | Dis. Valve | 279.5 | 0.00367 |
| 49 | 21-08-2023 | 14-PA-CF-109 B | Pump Valve | Valve | 8 | Dis. Valve | 63.1 | 0.00121 |
| 50 | 21-08-2023 | 14-PA-CF-109 A | Pump Valve | Valve | 3 | Dis. Valve | 25.8 | 0.00062 |
| 51 | 21-08-2023 | 14-PA-CF-111 B | Pump Valve | Valve | 3 | Dis. Valve | 46.2 | 0.00096 |
| 52 | 21-08-2023 | 14-PA-CF-111 A | Pump Valve | Valve | 6 | Dis. Valve | 32.1 | 0.00073 |
| 53 | 21-08-2023 | 14-PA-CF-113 B | Pump Valve | Valve | 6 | Dis. Valve | 50.2 | 0.00102 |
| 54 | 21-08-2023 | 14-PA-CF-113 A | Pump Valve | Valve | 6 | Dis. Valve | 156.2 | 0.00238 |
| 55 | 21-08-2023 | 14-PA-CF-112 B | Pump Valve | Valve | 6 | Dis. Valve | 23.5 | 0.00058 |
| 56 | 21-08-2023 | 14-PA-CF-112 A | Pump Valve | Valve | 3 | Dis. Valve | 8.2 | 0.00026 |
| 57 | 21-08-2023 | 14-FV-2901 | Control Valve | Valve | 3 | Control Valve | 63.2 | 0.00121 |
| 58 | 21-08-2023 | 14-LV-2901 | Control Valve | Valve | 8 | Control Valve | 123.2 | 0.00199 |
| 59 | 21-08-2023 | 14-VL-2801 | Control Valve | Valve | 4 | Control Valve | 62.4 | 0.00120 |
| 60 | 21-08-2023 | 14-XV-2801 | Control Valve | Valve | 3 | Control Valve | 250.6 | 0.00339 |
| 61 | 21-08-2023 | 14-FV-1602 | Control Valve | Valve | 2 | Control Valve | 23.1 | 0.00057 |
| 62 | 21-08-2023 | 14-FV-3201 | Control Valve | Valve | 6 | Control Valve | 163.2 | 0.00246 |
| 63 | 21-08-2023 | 14-FV-3302 N | Control Valve | Valve | 10 | Control Valve | 69.5 | 0.00130 |
| 64 | 21-08-2023 | 14-FV-3301 | Control Valve | Valve | 8 | Control Valve | 3.6 | 0.00014 |
| 65 | 21-08-2023 | 14-FV-2801 | Control Valve | Valve | 12 | Control Valve | 40.5 | 0.00087 |
| 66 | 21-08-2023 | 14-FV-1601 | Control Valve | Valve | 6 | Control Valve | 89.4 | 0.00157 |
| 67 | 21-08-2023 | 14-FV-1402 | Control Valve | Valve | 2 | Control Valve | 62.1 | 0.00120 |
| 68 | 21-08-2023 | 14-LV-3102 | Control Valve | Valve | 4 | Control Valve | 13.6 | 0.00039 |
| 69 | 21-08-2023 | 14-FV-3302 | Control Valve | Valve | 3 | Control Valve | 90.1 | 0.00158 |
| 70 | 21-08-2023 | 14-FV-1204 | Control Valve | Valve | 2 | Control Valve | 23.6 | 0.00058 |
| 71 | 21-08-2023 | 14-FV-3603 | Control Valve | Valve | 4 | Control Valve | 66.4 | 0.00126 |
| 72 | 21-08-2023 | 14-PV-3601 | Control Valve | Valve | 4 | Control Valve | 50.2 | 0.00102 |
| 73 | 21-08-2023 | 14-FV-1902 | Control Valve | Valve | 6 | Control Valve | 13.5 | 0.00038 |
| 74 | 21-08-2023 | 14-TV-3716 | Control Valve | Valve | 6 | Control Valve | 63.5 | 0.00122 |
| 75 | 21-08-2023 | 14-LV-3801 | Control Valve | Valve | 3 | Control Valve | 20.3 | 0.00052 |
| 76 | 21-08-2023 | 14-FV-3701 | Control Valve | Valve | 2 | Control Valve | 25.8 | 0.00062 |
| 77 | 21-08-2023 | 14-FV-3602 | Control Valve | Valve | 6 | Control Valve | 74.1 | 0.00136 |
| 78 | 21-08-2023 | 14-FV-3903 | Control Valve | Valve | 8 | Control Valve | 156.2 | 0.00238 |
| 79 | 21-08-2023 | 14-FV-3902 | Control Valve | Valve | 4 | Control Valve | 91.2 | 0.00159 |
| 80 | 21-08-2023 | 14-FV-1901 | Control Valve | Valve | 6 | Control Valve | 20.1 | 0.00052 |
| 81 | 21-08-2023 | 14-LV-3703 | Control Valve | Valve | 6 | Control Valve | 13.5 | 0.00038 |
| 82 | 21-08-2023 | 14-PDV-3701 N | Control Valve | Valve | 8 | Control Valve | 40.1 | 0.00086 |
| 83 | 21-08-2023 | 14-FV-1401 | Control Valve | Valve | 2 | Control Valve | 23.9 | 0.00059 |
| 84 | 21-08-2023 | 14-FV-1404 | Control Valve | Valve | 6 | Control Valve | 80.5 | 0.00145 |
| 85 | 21-08-2023 | 14-FV-3501 | Control Valve | Valve | 8 | Control Valve | 26.5 | 0.00063 |
| 86 | 21-08-2023 | 14-FV-1901 N | Control Valve | Valve | 3 | Control Valve | 13.4 | 0.00038 |
| 87 | 21-08-2023 | 14-PV-5001 | Control Valve | Valve | 4 | Control Valve | 80.4 | 0.00145 |
| 88 | 21-08-2023 | 14-PV-5002 | Control Valve | Valve | 2 | Control Valve | 16.8 | 0.00045 |

# BHARAT PETROLEUM CORPORATION LIMITED, BINA-M.P.
## LDAR QUARTERLY REPORT FOR JULY 2023 TO SEPTEMBER 2023
### Monitoring - VOC Plant – DCU

| S.No. | Date | Tag. No. | Equipment | Component | Line size (inch) | Location | Screening Value sv (ppm) | Estimated Emission Rate kg/day |
|---|---|---|---|---|---|---|---|---|
| COMPONENT - VALVE | | | | | | | | |
| 89 | 21-08-2023 | 14-LV-3201 | Control Valve | Valve | 6 | Control Valve | 90.4 | 0.00158 |
| 90 | 21-08-2023 | 14-LV-8201 | Control Valve | Valve | 4 | Control Valve | 13.5 | 0.00038 |
| 91 | 21-08-2023 | 14-FV-1201 | Control Valve | Valve | 8 | Control Valve | 26.5 | 0.00063 |
| 92 | 21-08-2023 | 14-FV-3202 | Control Valve | Valve | 6 | Control Valve | 33.6 | 0.00076 |
| 93 | 21-08-2023 | 14-LV-8202 | Control Valve | Valve | 4 | Control Valve | 122.5 | 0.00199 |
| 94 | 21-08-2023 | 14-FV-4004 | Control Valve | Valve | 4 | Control Valve | 63.3 | 0.00121 |
| 95 | 21-08-2023 | 14-LV-1201 | Control Valve | Valve | 8 | Control Valve | 80.4 | 0.00145 |
| 96 | 21-08-2023 | 14-FV-1905 N | Control Valve | Valve | 2 | Control Valve | 56.2 | 0.00111 |
| 97 | 21-08-2023 | 14-LV-3301 | Control Valve | Valve | 6 | Control Valve | 66.5 | 0.00126 |
| 98 | 21-08-2023 | 14-PV-7902 | Control Valve | Valve | 4 | Control Valve | 26.4 | 0.00063 |
| 99 | 21-08-2023 | 14-LV-3501 | Control Valve | Valve | 8 | Control Valve | 80.2 | 0.00145 |
| 100 | 21-08-2023 | 14-FV-1701 | Control Valve | Valve | 4 | Control Valve | 36.5 | 0.00080 |
| 101 | 21-08-2023 | 14-FV-1702 | Control Valve | Valve | 6 | Control Valve | 23.5 | 0.00058 |
| 102 | 21-08-2023 | 14-XV-2210 | Control Valve | Valve | 8 | Control Valve | 60.2 | 0.00117 |
| 103 | 21-08-2023 | 14-PV-3802 | Control Valve | Valve | 6 | Control Valve | 79.4 | 0.00144 |
| 104 | 21-08-2023 | 14-XV-2202 | Control Valve | Valve | 4 | Control Valve | 346.5 | 0.00431 |
| 105 | 21-08-2023 | 14-XV-2203 | Control Valve | Valve | 8 | Control Valve | 20.1 | 0.00052 |
| 106 | 21-08-2023 | 14-PV-2207 | Control Valve | Valve | 6 | Control Valve | 23.6 | 0.00058 |
| 107 | 21-08-2023 | 14-PV-2206 | Control Valve | Valve | 6 | Control Valve | 53.2 | 0.00107 |
| 108 | 21-08-2023 | 14-FV-4801 | Control Valve | Valve | 4 | Control Valve | 55.4 | 0.00110 |
| 109 | 21-08-2023 | 14-XV-2209 | Control Valve | Valve | 8 | Control Valve | 3.6 | 0.00014 |
| 110 | 21-08-2023 | 14-XV-2208 | Control Valve | Valve | 6 | Control Valve | 23.1 | 0.00057 |
| 111 | 21-08-2023 | 14-XV-2207 | Control Valve | Valve | 6 | Control Valve | 120.3 | 0.00196 |
| 112 | 21-08-2023 | 14-XV-2204 | Control Valve | Valve | 4 | Control Valve | 63.4 | 0.00121 |
| 113 | 21-08-2023 | 14-XV-2206 | Control Valve | Valve | 4 | Control Valve | 5.5 | 0.00020 |
| 114 | 21-08-2023 | 14-PV-2204 | Control Valve | Valve | 6 | Control Valve | 23.6 | 0.00058 |
| 115 | 21-08-2023 | 14-PV-2205 | Control Valve | Valve | 8 | Control Valve | 90.4 | 0.00158 |
| 116 | 21-08-2023 | 14-TV-2212 | Control Valve | Valve | 2 | Control Valve | 13.5 | 0.00038 |
| 117 | 21-08-2023 | 14-FV-4002 | Control Valve | Valve | 6 | Control Valve | 80.4 | 0.00145 |
| 118 | 21-08-2023 | 14-PDV-2202 | Control Valve | Valve | 8 | Control Valve | 56.8 | 0.00112 |
| 119 | 21-08-2023 | 14-PDV-2201 | Control Valve | Valve | 8 | Control Valve | 92.1 | 0.00160 |
| 120 | 21-08-2023 | 14-PDV-2203 | Control Valve | Valve | 6 | Control Valve | 23.5 | 0.00058 |
| 121 | 21-08-2023 | 14-PDV-2204 | Control Valve | Valve | 6 | Control Valve | 66.5 | 0.00126 |
| 122 | 21-08-2023 | 14-FV-2206 | Control Valve | Valve | 8 | Control Valve | 46.8 | 0.00097 |
| 123 | 21-08-2023 | 14-FV-2205 | Control Valve | Valve | 8 | Control Valve | 90.5 | 0.00158 |
| 124 | 21-08-2023 | 14-XV-2216 | Control Valve | Valve | 2 | Control Valve | 36.3 | 0.00080 |
| 125 | 21-08-2023 | 14-XV-2215 | Control Valve | Valve | 6 | Control Valve | 20.2 | 0.00052 |
| 126 | 21-08-2023 | 14-XV-2213 | Control Valve | Valve | 3 | Control Valve | 13.4 | 0.00038 |
| 127 | 21-08-2023 | 14-XV-2214 | Control Valve | Valve | 6 | Control Valve | 56.2 | 0.00111 |
| 128 | 21-08-2023 | 14-FV-2208 | Control Valve | Valve | 10 | Control Valve | 36.5 | 0.00080 |
| 129 | 21-08-2023 | 14-FV-2207 | Control Valve | Valve | 12 | Control Valve | 70.4 | 0.00131 |
| 130 | 21-08-2023 | 14-LV-3801 | Control Valve | Valve | 6 | Control Valve | 18.6 | 0.00049 |
| 131 | 21-08-2023 | 14-TV-4001 | Control Valve | Valve | 2 | Control Valve | 92.1 | 0.00160 |
| 132 | 21-08-2023 | 14-XV-3005 | Control Valve | Valve | 10 | Control Valve | 23.5 | 0.00058 |

# BHARAT PETROLEUM CORPORATION LIMITED, BINA-M.P.
## LDAR QUARTERLY REPORT FOR JULY 2023 TO SEPTEMBER 2023
### Monitoring - VOC Plant – DCU

| S.No. | Date | Tag. No. | Equipment | Component | Line size (inch) | Location | Screening Value sv (ppm) | Estimated Emission Rate kg/day |
|---|---|---|---|---|---|---|---|---|
| COMPONENT - VALVE | | | | | | | | |
| 133 | 21-08-2023 | 14-FV-2008 | Control Valve | Valve | 2 | Control Valve | 166.5 | 0.00250 |
| 134 | 21-08-2023 | 14-FV-2007 | Control Valve | Valve | 4 | Control Valve | 35.4 | 0.00079 |
| 135 | 21-08-2023 | 14-FV-2006 | Control Valve | Valve | 6 | Control Valve | 30.1 | 0.00070 |
| 136 | 21-08-2023 | 14-FV-2005 | Control Valve | Valve | 8 | Control Valve | 26.5 | 0.00063 |
| 137 | 21-08-2023 | 14-FV-2025 | Control Valve | Valve | 2 | Control Valve | 6.5 | 0.00022 |
| 138 | 21-08-2023 | 14-FV-2003 | Control Valve | Valve | 6 | Control Valve | 23.4 | 0.00058 |
| 139 | 21-08-2023 | 14-FV-2026 | Control Valve | Valve | 2 | Control Valve | 13.5 | 0.00038 |
| 140 | 21-08-2023 | 14-FV-2004 | Control Valve | Valve | 2 | Control Valve | 56.9 | 0.00112 |
| 141 | 21-08-2023 | 14-FV-2023 | Control Valve | Valve | 3 | Control Valve | 80.6 | 0.00145 |
| 142 | 21-08-2023 | 14-FV-2001 | Control Valve | Valve | 2 | Control Valve | 146.8 | 0.00227 |
| 143 | 21-08-2023 | 14-FV-2004 | Control Valve | Valve | 6 | Control Valve | 93.4 | 0.00162 |
| 144 | 21-08-2023 | 14-FV-2002 | Control Valve | Valve | 4 | Control Valve | 216.5 | 0.00304 |
| 145 | 21-08-2023 | 14-XV-1701 | Control Valve | Valve | 4 | Control Valve | 23.4 | 0.00058 |
| 146 | 21-08-2023 | 14-XV-1702 | Control Valve | Valve | 4 | Control Valve | 50.6 | 0.00103 |
| 147 | 21-08-2023 | 14-XV-2902 | Control Valve | Valve | 2 | Control Valve | 62.5 | 0.00120 |
| 148 | 21-08-2023 | 14-XV-2901 | Control Valve | Valve | 3 | Control Valve | 93.5 | 0.00162 |
| 149 | 21-08-2023 | 14-XV-2906 | Control Valve | Valve | 6 | Control Valve | 20.1 | 0.00052 |
| 150 | 21-08-2023 | 14-XV-2905 | Control Valve | Valve | 6 | Control Valve | 23.6 | 0.00058 |
| 151 | 21-08-2023 | 14-PA-CF-1002 A | Pump Valve | Valve | 12 | Suc. Valve | 5.5 | 0.00020 |
| 152 | 21-08-2023 | 14-PA-CF-1002 B | Pump Valve | Valve | 4 | Suc. Valve | 63.5 | 0.00122 |
| 153 | 21-08-2023 | 14-PA-CF-1001 A | Pump Valve | Valve | 4 | Suc. Valve | 23.1 | 0.00057 |
| 154 | 21-08-2023 | 14-PA-CF-1001 B | Pump Valve | Valve | 2 | Suc. Valve | 20.3 | 0.00052 |
| 155 | 21-08-2023 | 14-PA-CF-121 (N) C | Pump Valve | Valve | 2 | Suc. Valve | 62.1 | 0.00120 |
| 156 | 21-08-2023 | 14-PA-CF-1002 A | Pump Valve | Valve | 6 | Dis. Valve | 23.6 | 0.00058 |
| 157 | 21-08-2023 | 14-PA-CF-1002 B | Pump Valve | Valve | 3 | Dis. Valve | 50.2 | 0.00102 |
| 158 | 21-08-2023 | 14-PA-CF-1001 A | Pump Valve | Valve | 3 | Dis. Valve | 80.4 | 0.00145 |
| 159 | 21-08-2023 | 14-PA-CF-1001 B | Pump Valve | Valve | 2 | Dis. Valve | 56.5 | 0.00111 |
| 160 | 21-08-2023 | 14-PA-CF-121 (N) C | Pump Valve | Valve | 2 | Dis. Valve | 62.7 | 0.00120 |
| 161 | 21-08-2023 | 14-FV-6351 | Control Valve | Valve | 6 | Control Valve | 99.6 | 0.00170 |
| 162 | 21-08-2023 | 14-FV-3351 | Control Valve | Valve | 2 | Control Valve | 50.6 | 0.00103 |
| 163 | 21-08-2023 | 14-FV-2851 | Control Valve | Valve | 8 | Control Valve | 3.4 | 0.00014 |
| 164 | 21-08-2023 | 14-XV-3752 | Control Valve | Valve | 6 | Control Valve | 52.1 | 0.00105 |
| 165 | 21-08-2023 | 14-XV-3751 | Control Valve | Valve | 4 | Control Valve | 20.2 | 0.00052 |
| 166 | 21-08-2023 | 14-LV-3551 | Control Valve | Valve | 8 | Control Valve | 66.5 | 0.00126 |
| 167 | 21-08-2023 | 14-FV-1651 | Control Valve | Valve | 6 | Control Valve | 6.3 | 0.00022 |
| 168 | 21-08-2023 | 14-FV-2151 | Control Valve | Valve | 6 | Control Valve | 13.2 | 0.00038 |
| 169 | 21-08-2023 | 14-HV-2451 | Control Valve | Valve | 8 | Control Valve | 30.2 | 0.00070 |
| 170 | 21-08-2023 | 14-XV-2452 | Control Valve | Valve | 8 | Control Valve | 6.5 | 0.00022 |
| 171 | 21-08-2023 | 14-XV-2551 | Control Valve | Valve | 4 | Control Valve | 80.5 | 0.00145 |
| 172 | 21-08-2023 | 14-XV-6052 | Control Valve | Valve | 8 | Control Valve | 26.5 | 0.00063 |
| 173 | 21-08-2023 | 14-XV-6051 | Control Valve | Valve | 12 | Control Valve | 6.5 | 0.00022 |
| 174 | 21-08-2023 | 14-PSV-6051 | Control Valve | Valve | 8 | Control Valve | 43.8 | 0.00092 |
| 175 | 21-08-2023 | 14-PSV-6053 | Control Valve | Valve | 10 | Control Valve | 79.4 | 0.00144 |
| 176 | 21-08-2023 | 14-XV-6058 | Control Valve | Valve | 4 | Control Valve | 102.6 | 0.00174 |

# BHARAT PETROLEUM CORPORATION LIMITED, BINA-M.P.
## LDAR QUARTERLY REPORT FOR JULY 2023 TO SEPTEMBER 2023
### Monitoring - VOC Plant – DCU

| S.No. | Date | Tag. No. | Equipment | Component | Line size (inch) | Location | Screening Value sv (ppm) | Estimated Emission Rate kg/day |
|---|---|---|---|---|---|---|---|---|
| COMPONENT - VALVE | | | | | | | | |
| 177 | 21-08-2023 | 14-XV-6066 | Control Valve | Valve | 8 | Control Valve | 53.4 | 0.00107 |
| 178 | 21-08-2023 | 14-XV-6065 | Control Valve | Valve | 4 | Control Valve | 80.6 | 0.00145 |
| 179 | 21-08-2023 | 14-XV-6064 | Control Valve | Valve | 8 | Control Valve | 96.5 | 0.00166 |
| 180 | 21-08-2023 | 14-XV-6063 | Control Valve | Valve | 6 | Control Valve | 42.8 | 0.00091 |
| 181 | 21-08-2023 | 14-XV-6062 | Control Valve | Valve | 4 | Control Valve | 46.1 | 0.00096 |
| 182 | 21-08-2023 | 14-XV-6061 | Control Valve | Valve | 6 | Control Valve | 23.9 | 0.00059 |
| 183 | 21-08-2023 | 14-XV-6060 | Control Valve | Valve | 2 | Control Valve | 80.5 | 0.00145 |
| 184 | 21-08-2023 | 14-XV-6059 | Control Valve | Valve | 8 | Control Valve | 23.6 | 0.00058 |
| 185 | 21-08-2023 | 14-XV-6056 | Control Valve | Valve | 8 | Control Valve | 55.6 | 0.00110 |
| 186 | 21-08-2023 | 14-XV-6057 | Control Valve | Valve | 6 | Control Valve | 80.4 | 0.00145 |
| 187 | 21-08-2023 | 14-XV-6151 | Control Valve | Valve | 6 | Control Valve | 26.3 | 0.00063 |
| 188 | 21-08-2023 | 14-LV-6253 | Control Valve | Valve | 4 | Control Valve | 88.9 | 0.00156 |
| 189 | 21-08-2023 | 14-FV-6251 | Control Valve | Valve | 8 | Control Valve | 46.2 | 0.00096 |
| 190 | 21-08-2023 | 14-LV-6252 | Control Valve | Valve | 4 | Control Valve | 15.2 | 0.00042 |
| 191 | 21-08-2023 | 14-LV-6351 | Control Valve | Valve | 6 | Control Valve | 36.5 | 0.00080 |
| 192 | 21-08-2023 | 14-FV-6352 | Control Valve | Valve | 8 | Control Valve | 807.9 | 0.00811 |
| 193 | 21-08-2023 | 14-FV-6351 | Control Valve | Valve | 2 | Control Valve | 6.5 | 0.00022 |
| 194 | 21-08-2023 | 14-FV-3351 | Control Valve | Valve | 6 | Control Valve | 26.5 | 0.00063 |
| 195 | 21-08-2023 | 14-FV-3551 | Control Valve | Valve | 8 | Control Valve | 1.5 | 0.00007 |
| 196 | 21-08-2023 | 14-XV-6552 | Control Valve | Valve | 6 | Control Valve | 46.2 | 0.00096 |
| 197 | 21-08-2023 | 14-RB-00-1001 | Control Valve | Valve | 8 | Inlet Control Valve | 365.6 | 0.00449 |
| 198 | 21-08-2023 | 14-RB-00-1001 | Control Valve | Valve | 8 | Outlet Control Valve | 23.5 | 0.00058 |
| 199 | 21-08-2023 | 14-VV-00-1002 | Control Valve | Valve | 10 | Inlet Control Valve | 5.2 | 0.00019 |
| 200 | 21-08-2023 | 14-VV-00-1002 | Control Valve | Valve | 10 | Outlet Control Valve | 36.2 | 0.00080 |
| 201 | 21-08-2023 | 14-VV-00-1004 | Control Valve | Valve | 8 | Inlet Control Valve | 13.2 | 0.00038 |
| 202 | 21-08-2023 | 14-VV-00-1004 | Control Valve | Valve | 8 | Outlet Control Valve | 6.5 | 0.00022 |
| 203 | 21-08-2023 | 14-VV-00-1001 | Control Valve | Valve | 6 | Inlet Control Valve | 46.8 | 0.00097 |
| 204 | 21-08-2023 | 14-VV-00-1001 | Control Valve | Valve | 6 | Outlet Control Valve | 92.8 | 0.00161 |
| 205 | 21-08-2023 | 14-VV-00-1003 | Control Valve | Valve | 8 | Inlet Control Valve | 56.4 | 0.00111 |
| 206 | 21-08-2023 | 14-VV-00-1003 | Control Valve | Valve | 8 | Outlet Control Valve | 3.5 | 0.00014 |
| 207 | 21-08-2023 | 14-FV-2901 | Control Valve | Valve | 1 | Bypass Valve | 46.8 | 0.00097 |
| 208 | 21-08-2023 | 14-LV-2901 | Control Valve | Valve | 6 | Bypass Valve | 93.5 | 0.00162 |
| 209 | 21-08-2023 | 14-VL-2801 | Control Valve | Valve | 2 | Bypass Valve | 26.4 | 0.00063 |
| 210 | 21-08-2023 | 14-XV-2801 | Control Valve | Valve | 1 | Bypass Valve | 13.5 | 0.00038 |
| 211 | 21-08-2023 | 14-FV-1602 | Control Valve | Valve | 1 | Bypass Valve | 66.5 | 0.00126 |
| 212 | 21-08-2023 | 14-FV-3201 | Control Valve | Valve | 4 | Bypass Valve | 80.1 | 0.00145 |
| 213 | 21-08-2023 | 14-FV-3302 N | Control Valve | Valve | 8 | Bypass Valve | 26.5 | 0.00063 |
| 214 | 21-08-2023 | 14-FV-3301 | Control Valve | Valve | 6 | Bypass Valve | 43.6 | 0.00092 |
| 215 | 21-08-2023 | 14-FV-2801 | Control Valve | Valve | 10 | Bypass Valve | 52.2 | 0.00105 |
| 216 | 21-08-2023 | 14-FV-1601 | Control Valve | Valve | 4 | Bypass Valve | 23.6 | 0.00058 |
| 217 | 21-08-2023 | 14-FV-1402 | Control Valve | Valve | 1 | Bypass Valve | 80.2 | 0.00145 |
| 218 | 21-08-2023 | 14-LV-3102 | Control Valve | Valve | 2 | Bypass Valve | 256.2 | 0.00344 |
| 219 | 21-08-2023 | 14-FV-3302 | Control Valve | Valve | 1 | Bypass Valve | 3.6 | 0.00014 |
| 220 | 21-08-2023 | 14-FV-1204 | Control Valve | Valve | 1 | Bypass Valve | 96.5 | 0.00166 |

# BHARAT PETROLEUM CORPORATION LIMITED, BINA-M.P.
## LDAR QUARTERLY REPORT FOR JULY 2023 TO SEPTEMBER 2023
### Monitoring - VOC Plant – DCU

| S.No. | Date | Tag. No. | Equipment | Component | Line size (inch) | Location | Screening Value sv (ppm) | Estimated Emission Rate kg/day |
|---|---|---|---|---|---|---|---|---|
| COMPONENT - VALVE | | | | | | | | |
| 221 | 21-08-2023 | 14-FV-3603 | Control Valve | Valve | 2 | Bypass Valve | 61.2 | 0.00118 |
| 222 | 21-08-2023 | 14-PV-3601 | Control Valve | Valve | 2 | Bypass Valve | 3.7 | 0.00015 |
| 223 | 21-08-2023 | 14-FV-1902 | Control Valve | Valve | 4 | Bypass Valve | 89.4 | 0.00157 |
| 224 | 21-08-2023 | 14-TV-3716 | Control Valve | Valve | 4 | Bypass Valve | 56.1 | 0.00111 |
| 225 | 21-08-2023 | 14-LV-3801 | Control Valve | Valve | 1 | Bypass Valve | 26.5 | 0.00063 |
| 226 | 21-08-2023 | 14-FV-3701 | Control Valve | Valve | 1 | Bypass Valve | 30.2 | 0.00070 |
| 227 | 21-08-2023 | 14-FV-3602 | Control Valve | Valve | 4 | Bypass Valve | 13.5 | 0.00038 |
| 228 | 21-08-2023 | 14-FV-3903 | Control Valve | Valve | 6 | Bypass Valve | 122.5 | 0.00199 |
| 229 | 21-08-2023 | 14-FV-3902 | Control Valve | Valve | 2 | Bypass Valve | 46.1 | 0.00096 |
| 230 | 21-08-2023 | 14-FV-1901 | Control Valve | Valve | 4 | Bypass Valve | 80.4 | 0.00145 |
| 231 | 21-08-2023 | 14-LV-3703 | Control Valve | Valve | 4 | Bypass Valve | 26.5 | 0.00063 |
| 232 | 21-08-2023 | 14-PDV-3701 N | Control Valve | Valve | 6 | Bypass Valve | 23.6 | 0.00058 |
| 233 | 21-08-2023 | 14-FV-1401 | Control Valve | Valve | 1 | Bypass Valve | 133.5 | 0.00212 |
| 234 | 21-08-2023 | 14-FV-1404 | Control Valve | Valve | 4 | Bypass Valve | 62.4 | 0.00120 |
| 235 | 21-08-2023 | 14-FV-3501 | Control Valve | Valve | 6 | Bypass Valve | 20.6 | 0.00053 |
| 236 | 21-08-2023 | 14-FV-1901 N | Control Valve | Valve | 1 | Bypass Valve | 93.4 | 0.00162 |
| 237 | 21-08-2023 | 14-PV-5001 | Control Valve | Valve | 2 | Bypass Valve | 15.2 | 0.00042 |
| 238 | 21-08-2023 | 14-PV-5002 | Control Valve | Valve | 1 | Bypass Valve | 23.6 | 0.00058 |
| 239 | 21-08-2023 | 14-LV-3201 | Control Valve | Valve | 4 | Bypass Valve | 80.6 | 0.00145 |
| 240 | 21-08-2023 | 14-LV-8201 | Control Valve | Valve | 2 | Bypass Valve | 32.1 | 0.00073 |
| 241 | 21-08-2023 | 14-FV-1201 | Control Valve | Valve | 6 | Bypass Valve | 80.6 | 0.00145 |
| 242 | 21-08-2023 | 14-FV-3202 | Control Valve | Valve | 4 | Bypass Valve | 13.5 | 0.00038 |
| 243 | 21-08-2023 | 14-LV-8202 | Control Valve | Valve | 2 | Bypass Valve | 26.9 | 0.00064 |
| 244 | 21-08-2023 | 14-FV-4004 | Control Valve | Valve | 2 | Bypass Valve | 63.2 | 0.00121 |
| 245 | 21-08-2023 | 14-LV-1201 | Control Valve | Valve | 6 | Bypass Valve | 13.5 | 0.00038 |
| 246 | 21-08-2023 | 14-FV-1905 N | Control Valve | Valve | 1 | Bypass Valve | 122.6 | 0.00199 |
| 247 | 21-08-2023 | 14-LV-3301 | Control Valve | Valve | 4 | Bypass Valve | 356.5 | 0.00440 |
| 248 | 21-08-2023 | 14-PV-7902 | Control Valve | Valve | 2 | Bypass Valve | 20.1 | 0.00052 |
| 249 | 21-08-2023 | 14-LV-3501 | Control Valve | Valve | 6 | Bypass Valve | 56.4 | 0.00111 |
| 250 | 21-08-2023 | 14-FV-1701 | Control Valve | Valve | 2 | Bypass Valve | 80.6 | 0.00145 |
| 251 | 21-08-2023 | 14-FV-1702 | Control Valve | Valve | 4 | Bypass Valve | 23.6 | 0.00058 |
| 252 | 21-08-2023 | 14-XV-2210 | Control Valve | Valve | 6 | Bypass Valve | 50.6 | 0.00103 |
| 253 | 21-08-2023 | 14-PV-3802 | Control Valve | Valve | 4 | Bypass Valve | 32.2 | 0.00073 |
| 254 | 21-08-2023 | 14-XV-2202 | Control Valve | Valve | 2 | Bypass Valve | 22.6 | 0.00056 |
| 255 | 21-08-2023 | 14-XV-2203 | Control Valve | Valve | 6 | Bypass Valve | 53.9 | 0.00108 |
| 256 | 21-08-2023 | 14-PV-2207 | Control Valve | Valve | 4 | Bypass Valve | 80.7 | 0.00145 |
| **Total VOC Emission from Valves** | | | | | | | | **0.27757** |
| COMPONENT - COMPRESSOR | | | | | | | | |
| 1 | 21-08-2023 | 14-KA-CF-101 | Compresor | Pump Seals | - | Compresor | 65.2 | 0.01543 |
| 2 | 21-08-2023 | 14-KA-CF-1001 | Compresor | Pump Seals | - | Compresor | 36.2 | 0.01078 |
| **Total VOC Emission from Compressor** | | | | | | | | **0.02621** |

# BHARAT PETROLEUM CORPORATION LIMITED, BINA-M.P.
## LDAR QUARTERLY REPORT FOR JULY 2023 TO SEPTEMBER 2023
### Monitoring - VOC Plant – DCU

| S.No. | Date | Tag. No. | Equipment | Component | Line size (inch) | Location | Screening Value sv (ppm) | Estimated Emission Rate kg/day |
|---|---|---|---|---|---|---|---|---|
| COMPONENT - PSV | | | | | | | | |
| 1 | 21-08-2023 | 14-PSV-3101 A | PSV | Flange | 6 | Inlet | 156.2 | 0.00386 |
| | 21-08-2023 | 14-PSV-3101 A | PSV | Flange | 6 | Outlet | 36.5 | 0.00139 |
| 2 | 21-08-2023 | 14-PSV-3101 B | PSV | Flange | 6 | Inlet | 2.1 | 0.00019 |
| | 21-08-2023 | 14-PSV-3101 B | PSV | Flange | 6 | Outlet | 23.2 | 0.00101 |
| 3 | 21-08-2023 | 14-PSV-1301 | PSV | Flange | 4 | Inlet | 50.6 | 0.00175 |
| | 21-08-2023 | 14-PSV-1301 | PSV | Flange | 4 | Outlet | 34.2 | 0.00133 |
| 4 | 21-08-2023 | 14-PSV-3202 A | PSV | Flange | 6 | Inlet | 2.6 | 0.00022 |
| | 21-08-2023 | 14-PSV-3202 A | PSV | Flange | 6 | Outlet | 35.2 | 0.00135 |
| 5 | 21-08-2023 | 14-PSV-3202 B | PSV | Flange | 4 | Inlet | 13.4 | 0.00069 |
| | 21-08-2023 | 14-PSV-3202 B | PSV | Flange | 4 | Outlet | 50.2 | 0.00174 |
| 6 | 21-08-2023 | 14-PSV-1201 | PSV | Flange | 4 | Inlet | 36.8 | 0.00140 |
| | 21-08-2023 | 14-PSV-1201 | PSV | Flange | 4 | Outlet | 79.8 | 0.00240 |
| 7 | 21-08-2023 | 14-PSV-3103 | PSV | Flange | 2 | Inlet | 64.5 | 0.00207 |
| | 21-08-2023 | 14-PSV-3103 | PSV | Flange | 2 | Outlet | 20.3 | 0.00092 |
| 8 | 21-08-2023 | 14-PSV-2801 | PSV | Flange | 6 | Inlet | 13.6 | 0.00069 |
| | 21-08-2023 | 14-PSV-2801 | PSV | Flange | 6 | Outlet | 56.4 | 0.00188 |
| 9 | 21-08-2023 | 14-PSV-3301 A | PSV | Flange | 4 | Inlet | 23.6 | 0.00102 |
| | 21-08-2023 | 14-PSV-3301 A | PSV | Flange | 4 | Outlet | 6.5 | 0.00041 |
| 10 | 21-08-2023 | 14-PSV-3301 B | PSV | Flange | 4 | Inlet | 89.4 | 0.00260 |
| | 21-08-2023 | 14-PSV-3301 B | PSV | Flange | 4 | Outlet | 166.5 | 0.00403 |
| 11 | 21-08-2023 | 14-PSV-2201 | PSV | Flange | 4 | Inlet | 23.5 | 0.00102 |
| | 21-08-2023 | 14-PSV-2201 | PSV | Flange | 4 | Outlet | 8.3 | 0.00049 |
| 12 | 21-08-2023 | 14-PSV-3601 | PSV | Flange | 4 | Inlet | 26.4 | 0.00110 |
| | 21-08-2023 | 14-PSV-3601 | PSV | Flange | 4 | Outlet | 15.2 | 0.00075 |
| 13 | 21-08-2023 | 14-PSV-3901 | PSV | Flange | 4 | Inlet | 635.3 | 0.01034 |
| | 21-08-2023 | 14-PSV-3901 | PSV | Flange | 4 | Outlet | 6.2 | 0.00040 |
| 14 | 21-08-2023 | 14-PSV-3602 | PSV | Flange | 6 | Inlet | 13.9 | 0.00070 |
| | 21-08-2023 | 14-PSV-3602 | PSV | Flange | 6 | Outlet | 45.2 | 0.00161 |
| 15 | 21-08-2023 | 14-PSV-3801 | PSV | Flange | 12 | Inlet | 163.2 | 0.00398 |
| | 21-08-2023 | 14-PSV-3801 | PSV | Flange | 12 | Outlet | 3.9 | 0.00029 |
| 16 | 21-08-2023 | 14-PSV-1901 | PSV | Flange | 8 | Inlet | 86.8 | 0.00255 |
| | 21-08-2023 | 14-PSV-1901 | PSV | Flange | 8 | Outlet | 46.5 | 0.00164 |
| 17 | 21-08-2023 | 14-PSV-1202 | PSV | Flange | 6 | Inlet | 26.1 | 0.00110 |
| | 21-08-2023 | 14-PSV-1202 | PSV | Flange | 6 | Outlet | 23.5 | 0.00102 |
| 18 | 21-08-2023 | 14-PSV-5002 B | PSV | Flange | 4 | Inlet | 6.5 | 0.00041 |
| | 21-08-2023 | 14-PSV-5002 B | PSV | Flange | 4 | Outlet | 145.6 | 0.00367 |
| 19 | 21-08-2023 | 14-PSV-5002 A | PSV | Flange | 8 | Inlet | 23.5 | 0.00102 |
| | 21-08-2023 | 14-PSV-5002 A | PSV | Flange | 8 | Outlet | 3.2 | 0.00025 |
| 20 | 21-08-2023 | 14-PSV-5001 B | PSV | Flange | 6 | Inlet | 60.1 | 0.00197 |
| | 21-08-2023 | 14-PSV-5001 B | PSV | Flange | 6 | Outlet | 25.5 | 0.00108 |
| 21 | 21-08-2023 | 14-PSV-5001 A | PSV | Flange | 8 | Inlet | 6.5 | 0.00041 |
| | 21-08-2023 | 14-PSV-5001 A | PSV | Flange | 8 | Outlet | 3.9 | 0.00029 |
| 22 | 21-08-2023 | 14-PSV-3703 A | PSV | Flange | 10 | Inlet | 189.6 | 0.00442 |
| | 21-08-2023 | 14-PSV-3703 A | PSV | Flange | 10 | Outlet | 53.2 | 0.00181 |

# BHARAT PETROLEUM CORPORATION LIMITED, BINA-M.P.
## LDAR QUARTERLY REPORT FOR JULY 2023 TO SEPTEMBER 2023
### Monitoring - VOC Plant – DCU

| S.No. | Date | Tag. No. | Equipment | Component | Line size (inch) | Location | Screening Value sv (ppm) | Estimated Emission Rate kg/day |
|---|---|---|---|---|---|---|---|---|
| COMPONENT - PSV | | | | | | | | |
| 23 | 21-08-2023 | 14-PSV-3703 B | PSV | Flange | 12 | Inlet | 2.4 | 0.00020 |
| | 21-08-2023 | 14-PSV-3703 B | PSV | Flange | 12 | Outlet | 2.2 | 0.00019 |
| 24 | 21-08-2023 | 14-PSV-3604 | PSV | Flange | 8 | Inlet | 36.3 | 0.00138 |
| | 21-08-2023 | 14-PSV-3604 | PSV | Flange | 8 | Outlet | 146.2 | 0.00368 |
| 25 | 21-08-2023 | 14-PSV-3603 | PSV | Flange | 6 | Inlet | 32.2 | 0.00127 |
| | 21-08-2023 | 14-PSV-3603 | PSV | Flange | 6 | Outlet | 50.6 | 0.00175 |
| 26 | 21-08-2023 | 14-PSV-2602 | PSV | Flange | 8 | Inlet | 32.1 | 0.00127 |
| | 21-08-2023 | 14-PSV-2602 | PSV | Flange | 8 | Outlet | 2.6 | 0.00022 |
| 27 | 21-08-2023 | 14-PSV-4201 | PSV | Flange | 6 | Inlet | 35.2 | 0.00135 |
| | 21-08-2023 | 14-PSV-4201 | PSV | Flange | 6 | Outlet | 3.6 | 0.00027 |
| 28 | 21-08-2023 | 14-PSV-1401 E | PSV | Flange | 8 | Inlet | 93.5 | 0.00269 |
| | 21-08-2023 | 14-PSV-1401 E | PSV | Flange | 8 | Outlet | 26.5 | 0.00111 |
| 29 | 21-08-2023 | 14-PSV-2404 | PSV | Flange | 4 | Inlet | 13.2 | 0.00068 |
| | 21-08-2023 | 14-PSV-2404 | PSV | Flange | 4 | Outlet | 60.2 | 0.00197 |
| 30 | 21-08-2023 | 14-PSV-6251 A | PSV | Flange | 6 | Inlet | 35.4 | 0.00136 |
| | 21-08-2023 | 14-PSV-6251 A | PSV | Flange | 6 | Outlet | 6.6 | 0.00042 |
| 31 | 21-08-2023 | 14-PSV-6251 B | PSV | Flange | 2 | Inlet | 156.8 | 0.00387 |
| | 21-08-2023 | 14-PSV-6251 B | PSV | Flange | 2 | Outlet | 246.5 | 0.00531 |
| 32 | 21-08-2023 | 14-PSV-6351 | PSV | Flange | 4 | Inlet | 3.6 | 0.00027 |
| | 21-08-2023 | 14-PSV-6351 | PSV | Flange | 4 | Outlet | 3.5 | 0.00027 |
| 33 | 21-08-2023 | 14-PSV-6352 A | PSV | Flange | 3 | Inlet | 66.2 | 0.00211 |
| | 21-08-2023 | 14-PSV-6352 A | PSV | Flange | 3 | Outlet | 10.6 | 0.00058 |
| 34 | 21-08-2023 | 14-PSV-6352 B | PSV | Flange | 6 | Inlet | 53.2 | 0.00181 |
| | 21-08-2023 | 14-PSV-6352 B | PSV | Flange | 6 | Outlet | 80.6 | 0.00242 |
| 35 | 21-08-2023 | 14-PSV-6451 | PSV | Flange | 8 | Inlet | 5.5 | 0.00037 |
| | 21-08-2023 | 14-PSV-6451 | PSV | Flange | 8 | Outlet | 13.2 | 0.00068 |
| 36 | 21-08-2023 | 14-PSV-6452 | PSV | Flange | 4 | Inlet | 46.5 | 0.00164 |
| | 21-08-2023 | 14-PSV-6452 | PSV | Flange | 4 | Outlet | 2.2 | 0.00019 |
| 37 | 21-08-2023 | 14-PSV-3551 | PSV | Flange | 6 | Inlet | 16.5 | 0.00079 |
| | 21-08-2023 | 14-PSV-3551 | PSV | Flange | 6 | Outlet | 122.6 | 0.00325 |
| **Total VOC Emission from PSV** | | | | | | | | **0.11662** |

# BHARAT PETROLEUM CORPORATION LIMITED, BINA-M.P.
## LDAR QUARTERLY REPORT FOR JULY 2023 TO SEPTEMBER 2023
### Monitoring - VOC Plant – DCU

| S.No. | Date | Tag. No. | Equipment | Component | Line size (inch) | Location | Screening Value sv (ppm) | Estimated Emission Rate kg/day |
|---|---|---|---|---|---|---|---|---|
| COMPOPNENT - EXCHANGER | | | | | | | | |
| 1 | 21-08-2023 | 14-EE-00-105 | Exchanger | Flange | 8 | Inlet | 15.2 | 0.00075 |
| | 21-08-2023 | 14-EE-00-105 | Exchanger | Flange | 6 | Outlet | 63.5 | 0.00205 |
| 2 | 21-08-2023 | 14-EE-00-108/119 | Exchanger | Flange | 10 | Inlet | 179.5 | 0.00425 |
| | 21-08-2023 | 14-EE-00-108/119 | Exchanger | Flange | 8 | Outlet | 68.5 | 0.00216 |
| 3 | 21-08-2023 | 14-EE-00-112 | Exchanger | Flange | 6 | Inlet | 26.1 | 0.00110 |
| | 21-08-2023 | 14-EE-00-112 | Exchanger | Flange | 4 | Outlet | 2.3 | 0.00020 |
| 4 | 21-08-2023 | 14-EE-00-103 | Exchanger | Flange | 8 | Inlet | 53.2 | 0.00181 |
| | 21-08-2023 | 14-EE-00-103 | Exchanger | Flange | 6 | Outlet | 30.6 | 0.00123 |
| 5 | 21-08-2023 | 14-EE-00-110/111 | Exchanger | Flange | 10 | Inlet | 52.1 | 0.00178 |
| | 21-08-2023 | 14-EE-00-110/111 | Exchanger | Flange | 8 | Outlet | 4.2 | 0.00030 |
| 6 | 21-08-2023 | 14-EE-00-114 | Exchanger | Flange | 12 | Inlet | 36.5 | 0.00139 |
| | 21-08-2023 | 14-EE-00-114 | Exchanger | Flange | 10 | Outlet | 40.1 | 0.00148 |
| 7 | 21-08-2023 | 14-EE-00-115 A | Exchanger | Flange | 6 | Inlet | 23.5 | 0.00102 |
| | 21-08-2023 | 14-EE-00-115 A | Exchanger | Flange | 4 | Outlet | 65.2 | 0.00209 |
| 8 | 21-08-2023 | 14-EE-00-115 B | Exchanger | Flange | 8 | Inlet | 80.4 | 0.00242 |
| | 21-08-2023 | 14-EE-00-115 B | Exchanger | Flange | 6 | Outlet | 96.3 | 0.00274 |
| 9 | 21-08-2023 | 14-EE-00-115 C | Exchanger | Flange | 6 | Inlet | 33.6 | 0.00131 |
| | 21-08-2023 | 14-EE-00-115 C | Exchanger | Flange | 4 | Outlet | 80.1 | 0.00241 |
| 10 | 21-08-2023 | 14-EE-00-115 D | Exchanger | Flange | 10 | Inlet | 24.6 | 0.00105 |
| | 21-08-2023 | 14-EE-00-115 D | Exchanger | Flange | 8 | Outlet | 31.2 | 0.00124 |
| 11 | 21-08-2023 | 14-EE-00-122 A | Exchanger | Flange | 12 | Inlet | 65.8 | 0.00210 |
| | 21-08-2023 | 14-EE-00-122 A | Exchanger | Flange | 10 | Outlet | 70.6 | 0.00221 |
| 12 | 21-08-2023 | 14-EE-00-112 B | Exchanger | Flange | 12 | Inlet | 3.5 | 0.00027 |
| | 21-08-2023 | 14-EE-00-112 B | Exchanger | Flange | 10 | Outlet | 2.1 | 0.00019 |
| 13 | 21-08-2023 | 14-EE-00-109 A | Exchanger | Flange | 8 | Inlet | 23.6 | 0.00102 |
| | 21-08-2023 | 14-EE-00-109 A | Exchanger | Flange | 6 | Outlet | 5.4 | 0.00036 |
| 14 | 21-08-2023 | 14-EE-00-109 B | Exchanger | Flange | 8 | Inlet | 62.2 | 0.00202 |
| | 21-08-2023 | 14-EE-00-109 B | Exchanger | Flange | 6 | Outlet | 6.6 | 0.00042 |
| 15 | 21-08-2023 | 14-EE-00-109 C | Exchanger | Flange | 6 | Inlet | 53.2 | 0.00181 |
| | 21-08-2023 | 14-EE-00-109 C | Exchanger | Flange | 6 | Outlet | 13.4 | 0.00069 |
| 16 | 21-08-2023 | 14-EE-00-109 D | Exchanger | Flange | 4 | Inlet | 20.2 | 0.00092 |
| | 21-08-2023 | 14-EE-00-109 D | Exchanger | Flange | 10 | Outlet | 5.5 | 0.00037 |
| 17 | 21-08-2023 | 14-EE-00-107 A | Exchanger | Flange | 8 | Inlet | 80.4 | 0.00242 |
| | 21-08-2023 | 14-EE-00-107 A | Exchanger | Flange | 12 | Outlet | 6.5 | 0.00041 |
| 18 | 21-08-2023 | 14-EE-00-107 B | Exchanger | Flange | 10 | Inlet | 23.2 | 0.00101 |
| | 21-08-2023 | 14-EE-00-107 B | Exchanger | Flange | 12 | Outlet | 6.4 | 0.00041 |
| 19 | 21-08-2023 | 14-EE-00-107 C/D | Exchanger | Flange | 10 | Inlet | 5.1 | 0.00035 |
| | 21-08-2023 | 14-EE-00-107 C/D | Exchanger | Flange | 8 | Outlet | 70.6 | 0.00221 |
| 20 | 21-08-2023 | 14-EE-00-106 A/B | Exchanger | Flange | 6 | Inlet | 32.2 | 0.00127 |
| | 21-08-2023 | 14-EE-00-106 A/B | Exchanger | Flange | 8 | Outlet | 5.5 | 0.00037 |
| 21 | 21-08-2023 | 14-EE-00-106 B | Exchanger | Flange | 6 | Inlet | 136.5 | 0.00351 |
| | 21-08-2023 | 14-EE-00-106 B | Exchanger | Flange | 8 | Outlet | 2.1 | 0.00019 |
| 22 | 21-08-2023 | 14-EE-00-106 C | Exchanger | Flange | 6 | Inlet | 23.5 | 0.00102 |
| | 21-08-2023 | 14-EE-00-106 C | Exchanger | Flange | 4 | Outlet | 80.4 | 0.00242 |

# BHARAT PETROLEUM CORPORATION LIMITED, BINA-M.P.
## LDAR QUARTERLY REPORT FOR JULY 2023 TO SEPTEMBER 2023
### Monitoring - VOC Plant – DCU

| S.No. | Date | Tag. No. | Equipment | Component | Line size (inch) | Location | Screening Value sv (ppm) | Estimated Emission Rate kg/day |
|---|---|---|---|---|---|---|---|---|
| COMPOPNENT - EXCHANGER | | | | | | | | |
| 23 | 21-08-2023 | 14-EE-00-106 D | Exchanger | Flange | 2 | Inlet | 6.5 | 0.00041 |
| | 21-08-2023 | 14-EE-00-106 D | Exchanger | Flange | 6 | Outlet | 32.1 | 0.00127 |
| 24 | 21-08-2023 | 14-EE-00-101 | Exchanger | Flange | 4 | Inlet | 3.4 | 0.00026 |
| | 21-08-2023 | 14-EE-00-101 | Exchanger | Flange | 8 | Outlet | 52.1 | 0.00178 |
| 25 | 21-08-2023 | 14-EE-00-117 | Exchanger | Flange | 6 | Inlet | 23.6 | 0.00102 |
| | 21-08-2023 | 14-EE-00-117 | Exchanger | Flange | 6 | Outlet | 5.4 | 0.00036 |
| 26 | 21-08-2023 | 14-EE-00-116 | Exchanger | Flange | 4 | Inlet | 63.1 | 0.00204 |
| | 21-08-2023 | 14-EE-00-116 | Exchanger | Flange | 4 | Outlet | 23.6 | 0.00102 |
| 27 | 21-08-2023 | 14-EE-00-102 | Exchanger | Flange | 2 | Inlet | 3.5 | 0.00027 |
| | 21-08-2023 | 14-EE-00-102 | Exchanger | Flange | 12 | Outlet | 40.2 | 0.00148 |
| 28 | 21-08-2023 | 14-EE-00-118 | Exchanger | Flange | 10 | Inlet | 8.7 | 0.00051 |
| | 21-08-2023 | 14-EE-00-118 | Exchanger | Flange | 8 | Outlet | 46.3 | 0.00164 |
| 29 | 21-08-2023 | 14-EE-00-1001 | Exchanger | Flange | 8 | Inlet | 6.6 | 0.00042 |
| | 21-08-2023 | 14-EE-00-1001 | Exchanger | Flange | 6 | Outlet | 52.1 | 0.00178 |
| 30 | 21-08-2023 | 14-EE-00-1002 A | Exchanger | Flange | 10 | Inlet | 23.1 | 0.00101 |
| | 21-08-2023 | 14-EE-00-1002 A | Exchanger | Flange | 8 | Outlet | 56.4 | 0.00188 |
| 31 | 21-08-2023 | 14-EE-00-1002 B | Exchanger | Flange | 6 | Inlet | 122.3 | 0.00325 |
| | 21-08-2023 | 14-EE-00-1002 B | Exchanger | Flange | 4 | Outlet | 46.5 | 0.00164 |
| 32 | 21-08-2023 | 14-EE-00-1006 A | Exchanger | Flange | 6 | Inlet | 6.4 | 0.00041 |
| | 21-08-2023 | 14-EE-00-1006 A | Exchanger | Flange | 4 | Outlet | 52.1 | 0.00178 |
| 33 | 21-08-2023 | 14-EE-00-1006 B | Exchanger | Flange | 8 | Inlet | 23.2 | 0.00101 |
| | 21-08-2023 | 14-EE-00-1006 B | Exchanger | Flange | 6 | Outlet | 6.5 | 0.00041 |
| 34 | 21-08-2023 | 14-EE-00-1005 | Exchanger | Flange | 12 | Inlet | 65.4 | 0.00209 |
| | 21-08-2023 | 14-EE-00-1005 | Exchanger | Flange | 10 | Outlet | 23.1 | 0.00101 |
| Total VOC Emission from Exchanger | | | | | | | | 0.08944 |

**Total VOC Emission from DCU in Quarter July 2023 to September 2023 is 0.50984 kg/day**

# BHARAT PETROLEUM CORPORATION LIMITED, BINA-M.P.
## LDAR QUARTERLY REPORT FOR JULY 2023 TO SEPTEMBER 2023
### Monitoring - VOC Plant – OFFSITE

| S.No. | Date | Tag. No. | Equipment | Component | Line size (inch) | Location | Screening Value sv (ppm) | Estimated Emission Rate kg/day |
|---|---|---|---|---|---|---|---|---|
| COMPONENT - VALVE | | | | | | | | |
| 1 | 28-08-2023 | 52-PA-CF-005 B | Pump Valve | Valve | 12 | Suc. Valve | 178.9 | 0.00263 |
| 2 | 28-08-2023 | 52-PA-CF-005 A | Pump Valve | Valve | 12 | Suc. Valve | 6.6 | 0.00022 |
| 3 | 28-08-2023 | 52-PA-CF-021 B | Pump Valve | Valve | 8 | Suc. Valve | 50.2 | 0.00102 |
| 4 | 28-08-2023 | 52-PA-CF-021 A | Pump Valve | Valve | 8 | Suc. Valve | 13.6 | 0.00039 |
| 5 | 28-08-2023 | 52-PA-CF-018 | Pump Valve | Valve | 4 | Suc. Valve | 43.1 | 0.00091 |
| 6 | 28-08-2023 | 52-PA-CF-016 B | Pump Valve | Valve | 6 | Suc. Valve | 20.5 | 0.00052 |
| 7 | 28-08-2023 | 52-PA-CF-016 A | Pump Valve | Valve | 6 | Suc. Valve | 246.5 | 0.00334 |
| 8 | 28-08-2023 | 52-PA-CF-08 B | Pump Valve | Valve | 6 | Suc. Valve | 36.5 | 0.00080 |
| 9 | 28-08-2023 | 52-PA-CF-08 A | Pump Valve | Valve | 6 | Suc. Valve | 60.1 | 0.00117 |
| 10 | 28-08-2023 | 52-PA-CF-011 B | Pump Valve | Valve | 6 | Suc. Valve | 23.5 | 0.00058 |
| 11 | 28-08-2023 | 52-PA-CF-011 A | Pump Valve | Valve | 6 | Suc. Valve | 89.4 | 0.00157 |
| 12 | 28-08-2023 | 52-PA-CF-012 B | Pump Valve | Valve | 8 | Suc. Valve | 63.1 | 0.00121 |
| 13 | 28-08-2023 | 52-PA-CF-012 A | Pump Valve | Valve | 8 | Suc. Valve | 20.1 | 0.00052 |
| 14 | 28-08-2023 | 52-PA-CF-014 B | Pump Valve | Valve | 6 | Suc. Valve | 23.6 | 0.00058 |
| 15 | 28-08-2023 | 52-PA-CF-014 A | Pump Valve | Valve | 6 | Suc. Valve | 46.2 | 0.00096 |
| 16 | 28-08-2023 | 52-PA-CF-013 B | Pump Valve | Valve | 6 | Suc. Valve | 31.5 | 0.00072 |
| 17 | 28-08-2023 | 52-PA-CF-013 A | Pump Valve | Valve | 6 | Suc. Valve | 612.3 | 0.00659 |
| 18 | 28-08-2023 | 52-PA-CF-09 B | Pump Valve | Valve | 8 | Suc. Valve | 6.4 | 0.00022 |
| 19 | 28-08-2023 | 52-PA-CF-09 A | Pump Valve | Valve | 8 | Suc. Valve | 80.4 | 0.00145 |
| 20 | 28-08-2023 | 52-PA-CF-017 B | Pump Valve | Valve | 8 | Suc. Valve | 16.5 | 0.00044 |
| 21 | 28-08-2023 | 52-PA-CF-017 A | Pump Valve | Valve | 8 | Suc. Valve | 32.5 | 0.00074 |
| 22 | 28-08-2023 | 52-PA-CF-003 B | Pump Valve | Valve | 8 | Suc. Valve | 12.7 | 0.00037 |
| 23 | 28-08-2023 | 52-PA-CF-003 A | Pump Valve | Valve | 8 | Suc. Valve | 89.4 | 0.00157 |
| 24 | 28-08-2023 | 049-PA-2403 | Pump Valve | Valve | 10 | Suc. Valve | 13.6 | 0.00039 |
| 25 | 28-08-2023 | 52-PA-SC-010 B | Pump Valve | Valve | 6 | Suc. Valve | 52.1 | 0.00105 |
| 26 | 28-08-2023 | 52-PA-SC-010 A | Pump Valve | Valve | 6 | Suc. Valve | 30.4 | 0.00070 |
| 27 | 28-08-2023 | 52-PA-SC-4C | Pump Valve | Valve | 8 | Suc. Valve | 56.8 | 0.00112 |
| 28 | 28-08-2023 | 52-PA-SC-04 B | Pump Valve | Valve | 10 | Suc. Valve | 79.6 | 0.00144 |
| 29 | 28-08-2023 | 52-PA-SC-4 A | Pump Valve | Valve | 10 | Suc. Valve | 35.4 | 0.00079 |
| 30 | 28-08-2023 | 52-PA-CF-06 A | Pump Valve | Valve | 10 | Suc. Valve | 61.2 | 0.00118 |
| 31 | 28-08-2023 | 52-PA-CF-006 | Pump Valve | Valve | 10 | Suc. Valve | 30.7 | 0.00071 |
| 32 | 28-08-2023 | 52-PA-CF-002 C | Pump Valve | Valve | 10 | Suc. Valve | 89.3 | 0.00157 |
| 33 | 28-08-2023 | 52-PA-CF-02 B | Pump Valve | Valve | 10 | Suc. Valve | 61.4 | 0.00119 |
| 34 | 28-08-2023 | 52-PA-CF-02 A | Pump Valve | Valve | 10 | Suc. Valve | 20.5 | 0.00052 |
| 35 | 28-08-2023 | 52-PA-CF-007 B | Pump Valve | Valve | 8 | Suc. Valve | 36.4 | 0.00080 |
| 36 | 28-08-2023 | 52-PA-CF-007 A | Pump Valve | Valve | 8 | Suc. Valve | 13.2 | 0.00038 |
| 37 | 28-08-2023 | 52-PA-CF-019 B | Pump Valve | Valve | 6 | Suc. Valve | 163.2 | 0.00246 |
| 38 | 28-08-2023 | 52-PA-CF-019 A | Pump Valve | Valve | 6 | Suc. Valve | 80.7 | 0.00145 |
| 39 | 28-08-2023 | 52-PA-CF-005 B | Pump Valve | Valve | 8 | Dis. Valve | 46.8 | 0.00097 |
| 40 | 28-08-2023 | 52-PA-CF-005 A | Pump Valve | Valve | 8 | Dis. Valve | 93.1 | 0.00162 |
| 41 | 28-08-2023 | 52-PA-CF-021 B | Pump Valve | Valve | 6 | Dis. Valve | 20.5 | 0.00052 |
| 42 | 28-08-2023 | 52-PA-CF-021 A | Pump Valve | Valve | 6 | Dis. Valve | 6.6 | 0.00022 |
| 43 | 28-08-2023 | 52-PA-CF-018 | Pump Valve | Valve | 3 | Dis. Valve | 3.1 | 0.00013 |
| 44 | 28-08-2023 | 52-PA-CF-016 B | Pump Valve | Valve | 4 | Dis. Valve | 20.5 | 0.00052 |

# BHARAT PETROLEUM CORPORATION LIMITED, BINA-M.P.
## LDAR QUARTERLY REPORT FOR JULY 2023 TO SEPTEMBER 2023
### Monitoring - VOC Plant – OFFSITE

| S.No. | Date | Tag. No. | Equipment | Component | Line size (inch) | Location | Screening Value sv (ppm) | Estimated Emission Rate kg/day |
|---|---|---|---|---|---|---|---|---|
| COMPONENT - VALVE | | | | | | | | |
| 45 | 28-08-2023 | 52-PA-CF-016 A | Pump Valve | Valve | 4 | Dis. Valve | 43.2 | 0.00091 |
| 46 | 28-08-2023 | 52-PA-CF-08 B | Pump Valve | Valve | 4 | Dis. Valve | 71.4 | 0.00133 |
| 47 | 28-08-2023 | 52-PA-CF-08 A | Pump Valve | Valve | 4 | Dis. Valve | 56.9 | 0.00112 |
| 48 | 28-08-2023 | 52-PA-CF-011 B | Pump Valve | Valve | 6 | Dis. Valve | 83.1 | 0.00149 |
| 49 | 28-08-2023 | 52-PA-CF-011 A | Pump Valve | Valve | 6 | Dis. Valve | 20.5 | 0.00052 |
| 50 | 28-08-2023 | 52-PA-CF-012 B | Pump Valve | Valve | 6 | Dis. Valve | 631.4 | 0.00675 |
| 51 | 28-08-2023 | 52-PA-CF-012 A | Pump Valve | Valve | 6 | Dis. Valve | 52.8 | 0.00106 |
| 52 | 28-08-2023 | 52-PA-CF-014 B | Pump Valve | Valve | 4 | Dis. Valve | 89.4 | 0.00157 |
| 53 | 28-08-2023 | 52-PA-CF-014 A | Pump Valve | Valve | 4 | Dis. Valve | 23.5 | 0.00058 |
| 54 | 28-08-2023 | 52-PA-CF-013 B | Pump Valve | Valve | 4 | Dis. Valve | 26.4 | 0.00063 |
| 55 | 28-08-2023 | 52-PA-CF-013 A | Pump Valve | Valve | 4 | Dis. Valve | 20.3 | 0.00052 |
| 56 | 28-08-2023 | 52-PA-CF-019 B | Pump Valve | Valve | 6 | Dis. Valve | 61.1 | 0.00118 |
| 57 | 28-08-2023 | 52-PA-CF-019 A | Pump Valve | Valve | 6 | Dis. Valve | 23.5 | 0.00058 |
| 58 | 28-08-2023 | 52-PA-CF-017 B | Pump Valve | Valve | 6 | Dis. Valve | 4.2 | 0.00016 |
| 59 | 28-08-2023 | 52-PA-CF-017 A | Pump Valve | Valve | 6 | Dis. Valve | 60.3 | 0.00117 |
| 60 | 28-08-2023 | 52-PA-CF-003 B | Pump Valve | Valve | 6 | Dis. Valve | 99.6 | 0.00170 |
| 61 | 28-08-2023 | 52-PA-CF-003 A | Pump Valve | Valve | 6 | Dis. Valve | 70.1 | 0.00131 |
| 62 | 28-08-2023 | 049-PA-2403 | Pump Valve | Valve | 8 | Dis. Valve | 61.4 | 0.00119 |
| 63 | 28-08-2023 | 52-PA-SC-010 B | Pump Valve | Valve | 4 | Dis. Valve | 79.4 | 0.00144 |
| 64 | 28-08-2023 | 52-PA-SC-010 A | Pump Valve | Valve | 4 | Dis. Valve | 56.2 | 0.00111 |
| 65 | 28-08-2023 | 52-PA-SC-4C | Pump Valve | Valve | 6 | Dis. Valve | 63.1 | 0.00121 |
| 66 | 28-08-2023 | 52-PA-SC-04 B | Pump Valve | Valve | 8 | Dis. Valve | 20.7 | 0.00053 |
| 67 | 28-08-2023 | 52-PA-SC-4 A | Pump Valve | Valve | 8 | Dis. Valve | 89.4 | 0.00157 |
| 68 | 28-08-2023 | 52-PA-CF-06 A | Pump Valve | Valve | 8 | Dis. Valve | 52.1 | 0.00105 |
| 69 | 28-08-2023 | 52-PA-CF-006 | Pump Valve | Valve | 8 | Dis. Valve | 216.4 | 0.00303 |
| 70 | 28-08-2023 | 52-PA-CF-002 C | Pump Valve | Valve | 8 | Dis. Valve | 23.8 | 0.00058 |
| 71 | 28-08-2023 | 52-PA-CF-02 B | Pump Valve | Valve | 8 | Dis. Valve | 93.4 | 0.00162 |
| 72 | 28-08-2023 | 52-PA-CF-02 A | Pump Valve | Valve | 8 | Dis. Valve | 30.6 | 0.00071 |
| 73 | 28-08-2023 | 52-PA-CF-007 B | Pump Valve | Valve | 8 | Dis. Valve | 12.1 | 0.00035 |
| 74 | 28-08-2023 | 52-PA-CF-007 A | Pump Valve | Valve | 6 | Dis. Valve | 23.4 | 0.00058 |
| 75 | 28-08-2023 | 52-PA-CF-019 B | Pump Valve | Valve | 6 | Dis. Valve | 50.4 | 0.00102 |
| 76 | 28-08-2023 | 52-PA-CF-019 A | Pump Valve | Valve | 4 | Dis. Valve | 10.3 | 0.00031 |
| 77 | 28-08-2023 | 52-FV-2403 | Control Valve | Valve | 8 | Control Valve | 102.6 | 0.00174 |
| 78 | 28-08-2023 | 52-FV-1301 | Control Valve | Valve | 4 | Control Valve | 5.6 | 0.00020 |
| 79 | 28-08-2023 | 52-FV-2701 | Control Valve | Valve | 2 | Control Valve | 3.4 | 0.00014 |
| 80 | 28-08-2023 | 52-FV-1901 | Control Valve | Valve | 3 | Control Valve | 80.4 | 0.00145 |
| 81 | 28-08-2023 | 52-FV-2301 | Control Valve | Valve | 2 | Control Valve | 73.1 | 0.00135 |
| 82 | 28-08-2023 | 52-FV-2401 | Control Valve | Valve | 2 | Control Valve | 26.6 | 0.00064 |
| 83 | 28-08-2023 | 52-FV-2201 | Control Valve | Valve | 2 | Control Valve | 6.4 | 0.00022 |
| 84 | 28-08-2023 | 52-FV-2101 | Control Valve | Valve | 4 | Control Valve | 23.9 | 0.00059 |
| 85 | 28-08-2023 | 52-FV-1801 | Control Valve | Valve | 2 | Control Valve | 86.4 | 0.00153 |
| 86 | 28-08-2023 | 52-FV-2601 | Control Valve | Valve | 2 | Control Valve | 3.1 | 0.00013 |
| 87 | 28-08-2023 | 52-FV-1502 | Control Valve | Valve | 3 | Control Valve | 20.5 | 0.00052 |
| 88 | 28-08-2023 | 52-FV-2801 | Control Valve | Valve | 2 | Control Valve | 6.6 | 0.00022 |

# BHARAT PETROLEUM CORPORATION LIMITED, BINA-M.P.
## LDAR QUARTERLY REPORT FOR JULY 2023 TO SEPTEMBER 2023
### Monitoring - VOC Plant – OFFSITE

| S.No. | Date | Tag. No. | Equipment | Component | Line size (inch) | Location | Screening Value sv (ppm) | Estimated Emission Rate kg/day |
|---|---|---|---|---|---|---|---|---|
| COMPONENT - VALVE | | | | | | | | |
| 89 | 28-08-2023 | 52-FV-1501 | Control Valve | Valve | 4 | Control Valve | 53.1 | 0.00106 |
| 90 | 28-08-2023 | 52-PV-2001 | Control Valve | Valve | 4 | Control Valve | 23.1 | 0.00057 |
| 91 | 28-08-2023 | 52-PV-1401 | Control Valve | Valve | 6 | Control Valve | 30.4 | 0.00070 |
| 92 | 28-08-2023 | 52-PV-1203 | Control Valve | Valve | 6 | Control Valve | 63.5 | 0.00122 |
| 93 | 28-08-2023 | 52-FV-1202 | Control Valve | Valve | 4 | Control Valve | 2.2 | 0.00010 |
| 94 | 28-08-2023 | 52-FV-1201 | Control Valve | Valve | 4 | Control Valve | 89.4 | 0.00157 |
| 95 | 28-08-2023 | 52-FV-1601 | Control Valve | Valve | 3 | Control Valve | 56.2 | 0.00111 |
| 96 | 28-08-2023 | 52-FV-1701 | Control Valve | Valve | 3 | Control Valve | 13.4 | 0.00038 |
| 97 | 28-08-2023 | 52-FV-2901 | Control Valve | Valve | 2 | Control Valve | 70.6 | 0.00132 |
| 98 | 28-08-2023 | 52-PV-3201 | Control Valve | Valve | 4 | Control Valve | 36.6 | 0.00081 |
| 99 | 28-08-2023 | 52-PV-3202 | Control Valve | Valve | 3 | Control Valve | 93.5 | 0.00162 |
| 100 | 28-08-2023 | 52-FV-3206 | Control Valve | Valve | 4 | Control Valve | 120.3 | 0.00196 |
| 101 | 28-08-2023 | 52-FV-3205 | Control Valve | Valve | 2 | Control Valve | 36.5 | 0.00080 |
| 102 | 28-08-2023 | 52-FV-3204 | Control Valve | Valve | 2 | Control Valve | 43.1 | 0.00091 |
| 103 | 28-08-2023 | 52-FV-3105 B | Control Valve | Valve | 2 | Control Valve | 80.2 | 0.00145 |
| 104 | 28-08-2023 | 52-FV-3105 A | Control Valve | Valve | 2 | Control Valve | 13.6 | 0.00039 |
| 105 | 28-08-2023 | 52-PV-3105 | Control Valve | Valve | 6 | Control Valve | 49.6 | 0.00101 |
| 106 | 28-08-2023 | 52-FV-3104 B | Control Valve | Valve | 4 | Control Valve | 36.6 | 0.00081 |
| 107 | 28-08-2023 | 52-FV-3104 A | Control Valve | Valve | 3 | Control Valve | 79.4 | 0.00144 |
| 108 | 28-08-2023 | 52-PV-3104 | Control Valve | Valve | 4 | Control Valve | 26.1 | 0.00063 |
| 109 | 28-08-2023 | 52-PV-3103 | Control Valve | Valve | 4 | Control Valve | 43.2 | 0.00091 |
| 110 | 28-08-2023 | 52-FV-3103 | Control Valve | Valve | 2 | Control Valve | 61.2 | 0.00118 |
| 111 | 28-08-2023 | 52-FV-3106 | Control Valve | Valve | 2 | Control Valve | 46.5 | 0.00096 |
| 112 | 28-08-2023 | 52-PV-3203 | Control Valve | Valve | 4 | Control Valve | 23.8 | 0.00058 |
| 113 | 28-08-2023 | 52-PV-3101 | Control Valve | Valve | 4 | Control Valve | 79.4 | 0.00144 |
| 114 | 28-08-2023 | 52-FV-3101 A | Control Valve | Valve | 6 | Control Valve | 60.1 | 0.00117 |
| 115 | 28-08-2023 | 52-FV-3101 B | Control Valve | Valve | 6 | Control Valve | 156.4 | 0.00238 |
| 116 | 28-08-2023 | 52-FV-3102 A | Control Valve | Valve | 6 | Control Valve | 83.4 | 0.00149 |
| 117 | 28-08-2023 | 52-PV-3102 N | Control Valve | Valve | 4 | Control Valve | 129.5 | 0.00207 |
| 118 | 28-08-2023 | 52-FV-3102 B | Control Valve | Valve | 4 | Control Valve | 63.1 | 0.00121 |
| 119 | 28-08-2023 | 52-PV-3106 | Control Valve | Valve | 8 | Control Valve | 20.5 | 0.00052 |
| 120 | 28-08-2023 | 52-FV-3202 | Control Valve | Valve | 3 | Control Valve | 46.7 | 0.00097 |
| 121 | 28-08-2023 | 52-FV-3203 | Control Valve | Valve | 2 | Control Valve | 36.1 | 0.00080 |
| 122 | 28-08-2023 | 52-FV-3201 | Control Valve | Valve | 4 | Control Valve | 20.5 | 0.00052 |
| 123 | 28-08-2023 | 52-XV-1501 A | Control Valve | Valve | 6 | Control Valve | 63.9 | 0.00122 |
| 124 | 28-08-2023 | 52-XV-1501 B | Control Valve | Valve | 4 | Control Valve | 80.4 | 0.00145 |
| 125 | 28-08-2023 | 52-XV-1501 C | Control Valve | Valve | 6 | Control Valve | 13.6 | 0.00039 |
| 126 | 28-08-2023 | 52-XV-2401 B | Control Valve | Valve | 6 | Control Valve | 245.6 | 0.00334 |
| 127 | 28-08-2023 | 52-XV-2401 A | Control Valve | Valve | 4 | Control Valve | 36.2 | 0.00080 |
| 128 | 28-08-2023 | 52-XV-2301 B | Control Valve | Valve | 8 | Control Valve | 80.4 | 0.00145 |
| 129 | 28-08-2023 | 52-XV-2301 A | Control Valve | Valve | 4 | Control Valve | 5.6 | 0.00020 |
| 130 | 28-08-2023 | 52-XV-2701 B | Control Valve | Valve | 4 | Control Valve | 23.2 | 0.00057 |
| 131 | 28-08-2023 | 52-XV-2901 A | Control Valve | Valve | 8 | Control Valve | 4.4 | 0.00017 |
| 132 | 28-08-2023 | 52-XV-1701 A | Control Valve | Valve | 8 | Control Valve | 2.6 | 0.00011 |

# BHARAT PETROLEUM CORPORATION LIMITED, BINA-M.P.
## LDAR QUARTERLY REPORT FOR JULY 2023 TO SEPTEMBER 2023
### Monitoring - VOC Plant – OFFSITE

| S.No. | Date | Tag. No. | Equipment | Component | Line size (inch) | Location | Screening Value sv (ppm) | Estimated Emission Rate kg/day |
|---|---|---|---|---|---|---|---|---|
| COMPONENT - VALVE | | | | | | | | |
| 133 | 28-08-2023 | 52-XV-2901 B | Control Valve | Valve | 8 | Control Valve | 35.1 | 0.00078 |
| 134 | 28-08-2023 | 52-XV-2901 C | Control Valve | Valve | 8 | Control Valve | 31.2 | 0.00072 |
| 135 | 28-08-2023 | 52-XV-1901 B | Control Valve | Valve | 4 | Control Valve | 62.5 | 0.00120 |
| 136 | 28-08-2023 | 52-XV-1901 C | Control Valve | Valve | 4 | Control Valve | 6.5 | 0.00022 |
| 137 | 28-08-2023 | 52-XV-1901 A | Control Valve | Valve | 6 | Control Valve | 143.2 | 0.00223 |
| 138 | 28-08-2023 | 52-XV-2201 | Control Valve | Valve | 6 | Control Valve | 60.2 | 0.00117 |
| 139 | 28-08-2023 | 52-XV-1301 A | Control Valve | Valve | 6 | Control Valve | 9.5 | 0.00029 |
| 140 | 28-08-2023 | 52-XV-1301 B | Control Valve | Valve | 4 | Control Valve | 43.2 | 0.00091 |
| 141 | 28-08-2023 | 52-XV-1301 C | Control Valve | Valve | 8 | Control Valve | 156.3 | 0.00238 |
| 142 | 28-08-2023 | 52-XV-2701 A | Control Valve | Valve | 6 | Control Valve | 24.2 | 0.00059 |
| 143 | 28-08-2023 | 52-XV-2001 A | Control Valve | Valve | 8 | Control Valve | 80.7 | 0.00145 |
| 144 | 28-08-2023 | 52-XV-1401 A | Control Valve | Valve | 4 | Control Valve | 93.4 | 0.00162 |
| 145 | 28-08-2023 | 52-XV-1401 B | Control Valve | Valve | 8 | Control Valve | 16.5 | 0.00044 |
| 146 | 28-08-2023 | 52-XV-1401 C | Control Valve | Valve | 6 | Control Valve | 23.4 | 0.00058 |
| 147 | 28-08-2023 | 52-XV-1401 D | Control Valve | Valve | 4 | Control Valve | 26.9 | 0.00064 |
| 148 | 28-08-2023 | 52-XV-1401 F | Control Valve | Valve | 8 | Control Valve | 83.4 | 0.00149 |
| 149 | 28-08-2023 | 52-XV-1201 C | Control Valve | Valve | 6 | Control Valve | 12.7 | 0.00037 |
| 150 | 28-08-2023 | 52-XV-1201 B | Control Valve | Valve | 8 | Control Valve | 80.4 | 0.00145 |
| 151 | 28-08-2023 | 52-FV-1301 | Control Valve | Valve | 4 | Bypass Valve | 13.5 | 0.00038 |
| 152 | 28-08-2023 | 52-FV-2701 | Control Valve | Valve | 2 | Bypass Valve | 26.3 | 0.00063 |
| 153 | 28-08-2023 | 52-FV-1901 | Control Valve | Valve | 3 | Bypass Valve | 96.4 | 0.00166 |
| 154 | 28-08-2023 | 52-FV-2301 | Control Valve | Valve | 2 | Bypass Valve | 70.8 | 0.00132 |
| 155 | 28-08-2023 | 52-FV-2401 | Control Valve | Valve | 2 | Bypass Valve | 56.4 | 0.00111 |
| 156 | 28-08-2023 | 52-FV-2201 | Control Valve | Valve | 2 | Bypass Valve | 123.6 | 0.00200 |
| 157 | 28-08-2023 | 52-FV-2101 | Control Valve | Valve | 4 | Bypass Valve | 879.6 | 0.00864 |
| 158 | 28-08-2023 | 52-FV-1801 | Control Valve | Valve | 2 | Bypass Valve | 36.5 | 0.00080 |
| 159 | 28-08-2023 | 52-FV-2601 | Control Valve | Valve | 2 | Bypass Valve | 23.1 | 0.00057 |
| 160 | 28-08-2023 | 52-FV-1502 | Control Valve | Valve | 3 | Bypass Valve | 26.4 | 0.00063 |
| 161 | 28-08-2023 | 52-FV-2801 | Control Valve | Valve | 2 | Bypass Valve | 50.3 | 0.00102 |
| 162 | 28-08-2023 | 52-FV-1501 | Control Valve | Valve | 2 | Bypass Valve | 26.4 | 0.00063 |
| 163 | 28-08-2023 | 52-PV-2001 | Control Valve | Valve | 2 | Bypass Valve | 18.9 | 0.00049 |
| 164 | 28-08-2023 | 52-PV-1401 | Control Valve | Valve | 4 | Bypass Valve | 63.5 | 0.00122 |
| 165 | 28-08-2023 | 52-PV-1203 | Control Valve | Valve | 4 | Bypass Valve | 23.1 | 0.00057 |
| 166 | 28-08-2023 | 52-FV-1202 | Control Valve | Valve | 2 | Bypass Valve | 20.3 | 0.00052 |
| 167 | 28-08-2023 | 52-FV-1201 | Control Valve | Valve | 4 | Bypass Valve | 126.4 | 0.00203 |
| 168 | 28-08-2023 | 52-FV-1601 | Control Valve | Valve | 3 | Bypass Valve | 23.4 | 0.00058 |
| 169 | 28-08-2023 | 52-FV-1701 | Control Valve | Valve | 3 | Bypass Valve | 5.8 | 0.00020 |
| 170 | 28-08-2023 | 52-FV-2901 | Control Valve | Valve | 2 | Bypass Valve | 90.8 | 0.00159 |
| **Total VOC Emission from Valves** | | | | | | | | **0.18675** |

# BHARAT PETROLEUM CORPORATION LIMITED, BINA-M.P.
## LDAR QUARTERLY REPORT FOR JULY 2023 TO SEPTEMBER 2023
**Monitoring - VOC** **Plant – OFFSITE**

| S.No. | Date | Tag. No. | Equipment | Component | Line size (inch) | Location | Screening Value sv (ppm) | Estimated Emission Rate kg/day |
|---|---|---|---|---|---|---|---|---|
| **COMPONENT - PSV** | | | | | | | | |
| 1 | 28-08-2023 | 52-PSV-1801 | PSV | Flange | 8 | Inlet | 146.3 | 0.00368 |
| | 28-08-2023 | 52-PSV-1801 | PSV | Flange | 8 | Outlet | 20.1 | 0.00091 |
| 2 | 28-08-2023 | 52-PSV-1801 A | PSV | Flange | 8 | Inlet | 36.5 | 0.00139 |
| | 28-08-2023 | 52-PSV-1801 A | PSV | Flange | 8 | Outlet | 43.1 | 0.00156 |
| 3 | 28-08-2023 | 52-PSV-1801 B | PSV | Flange | 8 | Inlet | 20.8 | 0.00093 |
| | 28-08-2023 | 52-PSV-1801 B | PSV | Flange | 8 | Outlet | 93.4 | 0.00269 |
| 4 | 28-08-2023 | 52-PSV-2101 | PSV | Flange | 8 | Inlet | 56.5 | 0.00189 |
| | 28-08-2023 | 52-PSV-2101 | PSV | Flange | 8 | Outlet | 23.6 | 0.00102 |
| 5 | 28-08-2023 | 52-PSV-2101 A | PSV | Flange | 8 | Inlet | 6.4 | 0.00041 |
| | 28-08-2023 | 52-PSV-2101 A | PSV | Flange | 8 | Outlet | 23.5 | 0.00102 |
| 6 | 28-08-2023 | 52-PSV-2101 B | PSV | Flange | 8 | Inlet | 6.1 | 0.00039 |
| | 28-08-2023 | 52-PSV-2101 B | PSV | Flange | 8 | Outlet | 23.5 | 0.00102 |
| 7 | 28-08-2023 | 52-PSV-2102 | PSV | Flange | 8 | Inlet | 345.6 | 0.00674 |
| | 28-08-2023 | 52-PSV-2102 | PSV | Flange | 8 | Outlet | 62.1 | 0.00202 |
| 8 | 28-08-2023 | 52-PSV-2102 A | PSV | Flange | 8 | Inlet | 23.6 | 0.00102 |
| | 28-08-2023 | 52-PSV-2102 A | PSV | Flange | 8 | Outlet | 80.4 | 0.00242 |
| 9 | 28-08-2023 | 52-PSV-2102 B | PSV | Flange | 8 | Inlet | 26.3 | 0.00110 |
| | 28-08-2023 | 52-PSV-2102 B | PSV | Flange | 8 | Outlet | 63.5 | 0.00205 |
| 10 | 28-08-2023 | 52-PSV-2601 | PSV | Flange | 8 | Inlet | 20.1 | 0.00091 |
| | 28-08-2023 | 52-PSV-2601 | PSV | Flange | 8 | Outlet | 3.5 | 0.00027 |
| 11 | 28-08-2023 | 52-PSV-2601 A | PSV | Flange | 8 | Inlet | 80.4 | 0.00242 |
| | 28-08-2023 | 52-PSV-2601 A | PSV | Flange | 8 | Outlet | 26.5 | 0.00111 |
| 12 | 28-08-2023 | 52-PSV-2601 B | PSV | Flange | 8 | Inlet | 23.6 | 0.00102 |
| | 28-08-2023 | 52-PSV-2601 B | PSV | Flange | 8 | Outlet | 10.2 | 0.00057 |
| 13 | 28-08-2023 | 52-PSV-2801 | PSV | Flange | 8 | Inlet | 53.4 | 0.00181 |
| | 28-08-2023 | 52-PSV-2801 | PSV | Flange | 8 | Outlet | 83.4 | 0.00248 |
| 14 | 28-08-2023 | 52-PSV-2801 A | PSV | Flange | 8 | Inlet | 6.5 | 0.00041 |
| | 28-08-2023 | 52-PSV-2801 A | PSV | Flange | 8 | Outlet | 23.4 | 0.00102 |
| 15 | 28-08-2023 | 52-PSV-2801 B | PSV | Flange | 8 | Inlet | 246.5 | 0.00531 |
| | 28-08-2023 | 52-PSV-2801 B | PSV | Flange | 8 | Outlet | 413.6 | 0.00764 |
| 16 | 28-08-2023 | 52-PSV-1851 A | PSV | Flange | 10 | Inlet | 52.2 | 0.00178 |
| | 28-08-2023 | 52-PSV-1851 A | PSV | Flange | 10 | Outlet | 80.6 | 0.00242 |
| 17 | 28-08-2023 | 52-PSV-1851 B | PSV | Flange | 10 | Inlet | 39.8 | 0.00147 |
| | 28-08-2023 | 52-PSV-1851 B | PSV | Flange | 10 | Outlet | 213.6 | 0.00480 |
| 18 | 28-08-2023 | 52-PSV-1851 C | PSV | Flange | 10 | Inlet | 50.2 | 0.00174 |
| | 28-08-2023 | 52-PSV-1851 C | PSV | Flange | 10 | Outlet | 3.6 | 0.00027 |
| 19 | 28-08-2023 | 52-PSV-2851 A | PSV | Flange | 10 | Inlet | 2.2 | 0.00019 |
| | 28-08-2023 | 52-PSV-2851 A | PSV | Flange | 10 | Outlet | 13.2 | 0.00068 |
| 20 | 28-08-2023 | 52-PSV-2851 B | PSV | Flange | 10 | Inlet | 62.1 | 0.00202 |
| | 28-08-2023 | 52-PSV-2851 B | PSV | Flange | 10 | Outlet | 63.2 | 0.00204 |
| 21 | 28-08-2023 | 52-PSV-2851 C | PSV | Flange | 10 | Inlet | 13.2 | 0.00068 |
| | 28-08-2023 | 52-PSV-2851 C | PSV | Flange | 10 | Outlet | 20.2 | 0.00092 |
| **Total VOC Emission from PSV** | | | | | | | | **0.07623** |

# BHARAT PETROLEUM CORPORATION LIMITED, BINA-M.P.
## LDAR QUARTERLY REPORT FOR JULY 2023 TO SEPTEMBER 2023
**Monitoring - VOC** **Plant – OFFSITE**

| S.No. | Date | Tag. No. | Equipment | Component | Line size (inch) | Location | Screening Value sv (ppm) | Estimated Emission Rate kg/day |
|---|---|---|---|---|---|---|---|---|
| **COMPONENT - LOCAL VENT** | | | | | | | | |
| 1 | 28-08-2023 | 52-TT-DR-08 | Local Vent | Flange | - | Flange | 89.7 | 0.00261 |
| 2 | 28-08-2023 | 52-TT-DR-11 B | Local Vent | Flange | - | Flange | 23.9 | 0.00103 |
| 3 | 28-08-2023 | 52-TT-DR-11 A | Local Vent | Flange | - | Flange | 80.4 | 0.00242 |
| 4 | 28-08-2023 | 52-TT-DR-16 | Local Vent | Flange | - | Flange | 36.1 | 0.00138 |
| 5 | 28-08-2023 | 52-TT-DR-18 | Local Vent | Flange | - | Flange | 9.4 | 0.00053 |
| 6 | 28-08-2023 | 52-TT-CR-05 A | Local Vent | Flange | - | Flange | 12.5 | 0.00065 |
| 7 | 28-08-2023 | 52-TT-CR-05 B | Local Vent | Flange | - | Flange | 61.4 | 0.00200 |
| 8 | 28-08-2023 | 52-TT-DR-08 B | Local Vent | Flange | - | Flange | 23.4 | 0.00102 |
| 9 | 28-08-2023 | 52-TT-DR-18 B | Local Vent | Flange | - | Flange | 6.9 | 0.00043 |
| 10 | 28-08-2023 | 52-TT-DR-18 B | Local Vent | Flange | - | Flange | 142.5 | 0.00361 |
| 11 | 28-08-2023 | 52-TT-DR-18 B | Local Vent | Flange | - | Flange | 36.5 | 0.00139 |
| **Total VOC Emission from Local Vent** | | | | | | | | **0.01707** |
| **COMPONENT - PRV** | | | | | | | | |
| 1 | 28-08-2023 | 52-PVRV-1201 | PRV | Flange | - | Flange | 63.2 | 0.00204 |
| 2 | 28-08-2023 | 52-PVRV-1202 | PRV | Flange | - | Flange | 15.4 | 0.00076 |
| 3 | 28-08-2023 | 52-PVRV-1203 | PRV | Flange | - | Flange | 6.6 | 0.00042 |
| 4 | 28-08-2023 | 52-PVRV-1501 | PRV | Flange | - | Flange | 35.2 | 0.00135 |
| **Total VOC Emission from PRV** | | | | | | | | **0.00457** |
| **COMPONENT - VRV** | | | | | | | | |
| 1 | 28-08-2023 | 52-VRV-1801 | VRV | Flange | - | Flange | 23.1 | 0.00101 |
| 2 | 28-08-2023 | 52-VRV-2101 | VRV | Flange | - | Flange | 60.4 | 0.00198 |
| 3 | 28-08-2023 | 52-VRV-2102 | VRV | Flange | - | Flange | 71.6 | 0.00223 |
| 4 | 28-08-2023 | 52-VRV-2601 | VRV | Flange | - | Flange | 36.9 | 0.00140 |
| 5 | 28-08-2023 | 52-VRV-2801 | VRV | Flange | - | Flange | 2.3 | 0.00020 |
| **Total VOC Emission from VRV** | | | | | | | | **0.00681** |
| **COMPONENT - EMERGENCY VENT** | | | | | | | | |
| 1 | 28-08-2023 | 52-EV-1201 | EV | Flange | - | Flange | 23.1 | 0.00101 |
| 2 | 28-08-2023 | 52-EV-1202 | EV | Flange | - | Flange | 20.6 | 0.00093 |
| 3 | 28-08-2023 | 52-EV-1203 | EV | Flange | - | Flange | 147.8 | 0.00371 |
| 4 | 28-08-2023 | 52-EV-1501 | EV | Flange | - | Flange | 93.8 | 0.00269 |
| **Total VOC Emission from EV** | | | | | | | | **0.00834** |

**Total VOC Emission from OFFSITE in Quarter July 2023 to September 2023 is 0.29977 kg/day**

# BHARAT PETROLEUM CORPORATION LIMITED, BINA-M.P.
## LDAR QUARTERLY REPORT FOR JULY 2023 TO SEPTEMBER 2023
### Monitoring - VOC Plant – HGU

| S.No. | Date | Tag. No. | Equipment | Component | Line size (inch) | Location | Screening Value sv (ppm) | Estimated Emission Rate kg/day |
|---|---|---|---|---|---|---|---|---|
| COMPONENT - VALVE | | | | | | | | |
| 1 | 23-08-2023 | 18-PA-CF-11 A | Pump Valve | Valve | 6 | Suc. Valve | 156.2 | 0.00238 |
| 2 | 23-08-2023 | 18-PA-CF-11 B | Pump Valve | Valve | 10 | Suc. Valve | 36.5 | 0.00080 |
| 3 | 23-08-2023 | 18-PA-CF-11 A | Pump Valve | Valve | 4 | Dis. Valve | 20.3 | 0.00052 |
| 4 | 23-08-2023 | 18-PA-CF-11 B | Pump Valve | Valve | 8 | Dis. Valve | 63.1 | 0.00121 |
| 5 | 23-08-2023 | 18-PV-2804 A | Control Valve | Valve | 16 | Control Valve | 20.6 | 0.00053 |
| 6 | 23-08-2023 | 18-FV-4001 | Control Valve | Valve | 2 | Control Valve | 186.4 | 0.00272 |
| 7 | 23-08-2023 | 18-PV-2207 | Control Valve | Valve | 4 | Control Valve | 23.6 | 0.00058 |
| 8 | 23-08-2023 | 18-XV-2902 | Control Valve | Valve | 6 | Control Valve | 246.5 | 0.00334 |
| 9 | 23-08-2023 | 18-LV-2204 | Control Valve | Valve | 8 | Control Valve | 3.6 | 0.00014 |
| 10 | 23-08-2023 | 18-XV-2205 | Control Valve | Valve | 8 | Control Valve | 50.1 | 0.00102 |
| 11 | 23-08-2023 | 18-FV-2304 | Control Valve | Valve | 8 | Control Valve | 23.9 | 0.00059 |
| 12 | 23-08-2023 | 18-LV-4005 | Control Valve | Valve | 2 | Control Valve | 86.4 | 0.00153 |
| 13 | 23-08-2023 | 18-PV-4006 | Control Valve | Valve | 6 | Control Valve | 23.7 | 0.00058 |
| 14 | 23-08-2023 | 18-FV-3901 | Control Valve | Valve | 2 | Control Valve | 80.4 | 0.00145 |
| 15 | 23-08-2023 | 18-LV-3901 | Control Valve | Valve | 2 | Control Valve | 1.5 | 0.00007 |
| 16 | 23-08-2023 | 18-PV-3003 A | Control Valve | Valve | 8 | Control Valve | 26.6 | 0.00064 |
| 17 | 23-08-2023 | 18-PV-3003 B | Control Valve | Valve | 8 | Control Valve | 39.5 | 0.00085 |
| 18 | 23-08-2023 | 18-PV-3101 A | Control Valve | Valve | 14 | Control Valve | 23.6 | 0.00058 |
| 19 | 23-08-2023 | 18-PV-3101 B | Control Valve | Valve | 10 | Control Valve | 20.6 | 0.00053 |
| 20 | 23-08-2023 | 18-XV-3606 | Control Valve | Valve | 6 | Control Valve | 35.2 | 0.00078 |
| 21 | 23-08-2023 | 18-XV-3605 | Control Valve | Valve | 6 | Control Valve | 133.2 | 0.00211 |
| 22 | 23-08-2023 | 18-PV-2307 B | Control Valve | Valve | 12 | Control Valve | 50.6 | 0.00103 |
| 23 | 23-08-2023 | 18-PV-3205 A | Control Valve | Valve | 2 | Control Valve | 3.9 | 0.00015 |
| 24 | 23-08-2023 | 18-PV-3205 B | Control Valve | Valve | 2 | Control Valve | 86.4 | 0.00153 |
| 25 | 23-08-2023 | 18-PV-3203 A | Control Valve | Valve | 2 | Control Valve | 20.5 | 0.00052 |
| 26 | 23-08-2023 | 18-LV-3201 | Control Valve | Valve | 6 | Control Valve | 23.6 | 0.00058 |
| 27 | 23-08-2023 | 18-XV-3202 | Control Valve | Valve | 8 | Control Valve | 4.1 | 0.00016 |
| 28 | 23-08-2023 | 18-XV-3201 | Control Valve | Valve | 36 | Control Valve | 25.8 | 0.00062 |
| 29 | 23-08-2023 | 18-PV-3207 A | Control Valve | Valve | 36 | Control Valve | 93.5 | 0.00162 |
| 30 | 23-08-2023 | 18-PV-3205 B | Control Valve | Valve | 8 | Control Valve | 16.4 | 0.00044 |
| 31 | 23-08-2023 | 18-PV-3104 | Control Valve | Valve | 6 | Control Valve | 23.6 | 0.00058 |
| 32 | 23-08-2023 | 18-XV-3607 | Control Valve | Valve | 6 | Control Valve | 50.6 | 0.00103 |
| 33 | 23-08-2023 | 18-PV-3603 | Control Valve | Valve | 3 | Control Valve | 23.1 | 0.00057 |
| 34 | 23-08-2023 | 18-FV-3601 B | Control Valve | Valve | 4 | Control Valve | 42.6 | 0.00090 |
| 35 | 23-08-2023 | 18-FV-3601 A | Control Valve | Valve | 4 | Control Valve | 93.5 | 0.00162 |
| 36 | 23-08-2023 | 18-TV-2801 | Control Valve | Valve | 1 | Control Valve | 80.4 | 0.00145 |
| 37 | 23-08-2023 | 18-PDV-4501 | Control Valve | Valve | 1 | Control Valve | 56.8 | 0.00112 |
| 38 | 23-08-2023 | 18-LV-2201 | Control Valve | Valve | 8 | Control Valve | 79.4 | 0.00144 |
| 39 | 23-08-2023 | 18-FV-4601 | Control Valve | Valve | 8 | Control Valve | 56.1 | 0.00111 |
| 40 | 23-08-2023 | 18-FV-2302 A | Control Valve | Valve | 8 | Control Valve | 23.2 | 0.00057 |
| 41 | 23-08-2023 | 18-FV-2302 B | Control Valve | Valve | 2 | Control Valve | 30.6 | 0.00071 |
| 42 | 23-08-2023 | 18-XV-2501 | Control Valve | Valve | 2 | Control Valve | 80.1 | 0.00145 |
| 43 | 23-08-2023 | 18-FV-2501 | Control Valve | Valve | 16 | Control Valve | 46.2 | 0.00096 |
| 44 | 23-08-2023 | 18-PV-2405 B | Control Valve | Valve | 4 | Control Valve | 22.5 | 0.00056 |

# BHARAT PETROLEUM CORPORATION LIMITED, BINA-M.P.
## LDAR QUARTERLY REPORT FOR JULY 2023 TO SEPTEMBER 2023
### Monitoring - VOC Plant – HGU

| S.No. | Date | Tag. No. | Equipment | Component | Line size (inch) | Location | Screening Value sv (ppm) | Estimated Emission Rate kg/day |
|---|---|---|---|---|---|---|---|---|
| COMPONENT - VALVE | | | | | | | | |
| 45 | 23-08-2023 | 18-LV-4702 | Control Valve | Valve | 2 | Control Valve | 80.4 | 0.00145 |
| 46 | 23-08-2023 | 18-PV-2201 B | Control Valve | Valve | 4 | Control Valve | 23.9 | 0.00059 |
| 47 | 23-08-2023 | 18-PV-4001 B | Control Valve | Valve | 14 | Control Valve | 6.4 | 0.00022 |
| 48 | 23-08-2023 | 18-PV-2804 B | Control Valve | Valve | 1 | Control Valve | 122.4 | 0.00198 |
| 49 | 23-08-2023 | 18-PV-4502 B | Control Valve | Valve | 6 | Control Valve | 56.8 | 0.00112 |
| 50 | 23-08-2023 | 18-FV-2302 C | Control Valve | Valve | 3 | Control Valve | 70.6 | 0.00132 |
| 51 | 23-08-2023 | 18-FV-2502 | Control Valve | Valve | 3 | Control Valve | 93.5 | 0.00162 |
| 52 | 23-08-2023 | 18-XV-2903 | Control Valve | Valve | 2 | Control Valve | 512.6 | 0.00577 |
| 53 | 23-08-2023 | 18-TV-2803 | Control Valve | Valve | 2 | Control Valve | 43.6 | 0.00092 |
| 54 | 23-08-2023 | 18-PV-2201 A | Control Valve | Valve | 6 | Control Valve | 50.1 | 0.00102 |
| 55 | 23-08-2023 | 18-XV-2201 | Control Valve | Valve | 4 | Control Valve | 23.9 | 0.00059 |
| 56 | 23-08-2023 | 18-LV-4001 A | Control Valve | Valve | 2 | Control Valve | 86.7 | 0.00153 |
| 57 | 23-08-2023 | 18-LV-4001 D | Control Valve | Valve | 2 | Control Valve | 41.5 | 0.00089 |
| 58 | 23-08-2023 | 18-LV-2101 A | Control Valve | Valve | 2 | Control Valve | 26.5 | 0.00063 |
| 59 | 23-08-2023 | 18-FV-2103 | Control Valve | Valve | 6 | Control Valve | 93.8 | 0.00163 |
| 60 | 23-08-2023 | 18-FV-2101 | Control Valve | Valve | 6 | Control Valve | 156.2 | 0.00238 |
| 61 | 23-08-2023 | 18-LV-2101 B | Control Valve | Valve | 10 | Control Valve | 32.5 | 0.00074 |
| 62 | 23-08-2023 | 18-LV-4001 A | Control Valve | Valve | 4 | Control Valve | 6.4 | 0.00022 |
| 63 | 23-08-2023 | 18-PV-4001 A | Control Valve | Valve | 36 | Control Valve | 80.4 | 0.00145 |
| 64 | 23-08-2023 | 18-XV-2302 | Control Valve | Valve | 12 | Control Valve | 13.5 | 0.00038 |
| 65 | 23-08-2023 | 18-XV-2301 | Control Valve | Valve | 6 | Control Valve | 62.5 | 0.00120 |
| 66 | 23-08-2023 | 18-XV-2901 | Control Valve | Valve | 6 | Control Valve | 80.4 | 0.00145 |
| 67 | 23-08-2023 | 18-TV-2307 | Control Valve | Valve | 4 | Control Valve | 16.5 | 0.00044 |
| 68 | 23-08-2023 | 18-FV-2901 | Control Valve | Valve | 8 | Control Valve | 23.5 | 0.00058 |
| 69 | 23-08-2023 | 18-TV-2902 A | Control Valve | Valve | 8 | Control Valve | 66.5 | 0.00126 |
| 70 | 23-08-2023 | 18-TV-2902 B | Control Valve | Valve | 8 | Control Valve | 20.6 | 0.00053 |
| 71 | 23-08-2023 | 18-HV-3513 | Control Valve | Valve | 8 | Control Valve | 32.1 | 0.00073 |
| 72 | 23-08-2023 | 18-FV-3501 | Control Valve | Valve | 8 | Control Valve | 89.4 | 0.00157 |
| 73 | 23-08-2023 | 18-XV-6103 | Control Valve | Valve | 8 | Control Valve | 216.5 | 0.00304 |
| 74 | 23-08-2023 | 18-XV-6104 | Control Valve | Valve | 6 | Control Valve | 43.5 | 0.00092 |
| 75 | 23-08-2023 | 18-XV-6105 | Control Valve | Valve | 6 | Control Valve | 62.4 | 0.00120 |
| 76 | 23-08-2023 | 18-FV-2351 | Control Valve | Valve | 6 | Control Valve | 23.6 | 0.00058 |
| 77 | 23-08-2023 | 18-PV-4051 | Control Valve | Valve | 6 | Control Valve | 50.2 | 0.00102 |
| 78 | 23-08-2023 | 18-PV-5151 | Control Valve | Valve | 4 | Control Valve | 13.8 | 0.00039 |
| 79 | 23-08-2023 | 18-FV-2552 | Control Valve | Valve | 6 | Control Valve | 79.4 | 0.00144 |
| 80 | 23-08-2023 | 18-HV-2952 | Control Valve | Valve | 18 | Control Valve | 50.1 | 0.00102 |
| 81 | 23-08-2023 | 18-HV-2951 | Control Valve | Valve | 18 | Control Valve | 46.5 | 0.00096 |
| 82 | 23-08-2023 | 18-MOV-5051 | Control Valve | Valve | 8 | Control Valve | 26.6 | 0.00064 |
| 83 | 23-08-2023 | 18-MOV-5052 | Control Valve | Valve | 4 | Control Valve | 36.9 | 0.00081 |
| 84 | 23-08-2023 | 18-MOV-5053 | Control Valve | Valve | 4 | Control Valve | 80.4 | 0.00145 |
| 85 | 23-08-2023 | 18-FV-5252 | Control Valve | Valve | 8 | Control Valve | 246.8 | 0.00335 |
| 86 | 23-08-2023 | 18-FV-5251 | Control Valve | Valve | 8 | Control Valve | 92.1 | 0.00160 |
| 87 | 23-08-2023 | 18-RB-00 -11 | Control Valve | Valve | 12 | Inlet Control Valve | 63.5 | 0.00122 |
| 88 | 23-08-2023 | 18-RB-00 -11 | Control Valve | Valve | 12 | Outlet Control Valve | 13.2 | 0.00038 |

# BHARAT PETROLEUM CORPORATION LIMITED, BINA-M.P.
## LDAR QUARTERLY REPORT FOR JULY 2023 TO SEPTEMBER 2023
### Monitoring - VOC Plant – HGU

| S.No. | Date | Tag. No. | Equipment | Component | Line size (inch) | Location | Screening Value sv (ppm) | Estimated Emission Rate kg/day |
|---|---|---|---|---|---|---|---|---|
| COMPONENT - VALVE | | | | | | | | |
| 89 | 23-08-2023 | 18-RB-00 -12 A | Control Valve | Valve | 12 | Inlet Control Valve | 30.5 | 0.00070 |
| 90 | 23-08-2023 | 18-RB-00 -12 A | Control Valve | Valve | 12 | Outlet Control Valve | 6.4 | 0.00022 |
| 91 | 23-08-2023 | 18-RB-00 -12 B | Control Valve | Valve | 12 | Inlet Control Valve | 80.6 | 0.00145 |
| 92 | 23-08-2023 | 18-RB-00 -12 B | Control Valve | Valve | 12 | Outlet Control Valve | 53.9 | 0.00108 |
| 93 | 23-08-2023 | 18-RB-00 -1010 A | Control Valve | Valve | 12 | Inlet Control Valve | 8.4 | 0.00027 |
| 94 | 23-08-2023 | 18-RB-00 -1010 A | Control Valve | Valve | 12 | Outlet Control Valve | 56.3 | 0.00111 |
| 95 | 23-08-2023 | 18-RB-00 -13 | Control Valve | Valve | 12 | Inlet Control Valve | 92.4 | 0.00161 |
| 96 | 23-08-2023 | 18-RB-00 -13 | Control Valve | Valve | 12 | Outlet Control Valve | 13.5 | 0.00038 |
| 97 | 23-08-2023 | 18-RB-00 -1014 | Control Valve | Valve | 12 | Inlet Control Valve | 6.5 | 0.00022 |
| 98 | 23-08-2023 | 18-RB-00- 1014 | Control Valve | Valve | 12 | Outlet Control Valve | 20.6 | 0.00053 |
| 99 | 23-08-2023 | 18-XV-2351 | Control Valve | Valve | 10 | Control Valve | 23.4 | 0.00058 |
| 100 | 23-08-2023 | 18-TV-2901 | Control Valve | Valve | 24 | Control Valve | 15.8 | 0.00043 |
| 101 | 23-08-2023 | 18-LZ-1017 | Control Valve | Valve | 24 | Control Valve | 76.4 | 0.00140 |
| 102 | 23-08-2023 | 18-TV-5053 | Control Valve | Valve | 12 | Control Valve | 23.6 | 0.00058 |
| 103 | 23-08-2023 | 18-LV-3001 | Control Valve | Valve | 4 | Control Valve | 93.1 | 0.00162 |
| 104 | 23-08-2023 | 18-LV-2901 | Control Valve | Valve | 4 | Control Valve | 26.5 | 0.00063 |
| 105 | 23-08-2023 | 18-LV-3403 | Control Valve | Valve | 6 | Control Valve | 40.6 | 0.00087 |
| 106 | 23-08-2023 | 18-LV-3401 | Control Valve | Valve | 6 | Control Valve | 23.5 | 0.00058 |
| 107 | 23-08-2023 | 18-XV-2206 | Control Valve | Valve | 16 | Control Valve | 155.6 | 0.00237 |
| 108 | 23-08-2023 | 18-XV-2208 | Control Valve | Valve | 2 | Control Valve | 93.4 | 0.00162 |
| 109 | 23-08-2023 | 18-XV-2209 | Control Valve | Valve | 2 | Control Valve | 12.5 | 0.00036 |
| 110 | 23-08-2023 | 18-XV-2207 | Control Valve | Valve | 4 | Control Valve | 26.5 | 0.00063 |
| 111 | 23-08-2023 | 14-FV-2208 | Control Valve | Valve | 6 | Control Valve | 3.6 | 0.00014 |
| 112 | 23-08-2023 | 18-PV-3403A | Control Valve | Valve | 6 | Control Valve | 6.6 | 0.00022 |
| 113 | 23-08-2023 | 18-PV-3203B | Control Valve | Valve | 6 | Control Valve | 90.1 | 0.00158 |
| 114 | 23-08-2023 | 18-LV-4001C | Control Valve | Valve | 2 | Control Valve | 56.4 | 0.00111 |
| 115 | 23-08-2023 | 18-LV-4001B | Control Valve | Valve | 4 | Control Valve | 23.8 | 0.00058 |
| 116 | 23-08-2023 | 18-LV-4001D | Control Valve | Valve | 2 | Control Valve | 90.1 | 0.00158 |
| 117 | 23-08-2023 | 18-LV-2101B | Control Valve | Valve | 2 | Control Valve | 56.4 | 0.00111 |
| 118 | 23-08-2023 | 18-PV-2804 A | Control Valve | Valve | 6 | Bypass Valve | 346.5 | 0.00431 |
| 119 | 23-08-2023 | 18-FV-4001 | Control Valve | Valve | 6 | Bypass Valve | 80.4 | 0.00145 |
| 120 | 23-08-2023 | 18-PV-2207 | Control Valve | Valve | 12 | Bypass Valve | 23.9 | 0.00059 |
| 121 | 23-08-2023 | 18-LV-2204 | Control Valve | Valve | 8 | Bypass Valve | 63.1 | 0.00121 |
| 122 | 23-08-2023 | 18-FV-2304 | Control Valve | Valve | 4 | Bypass Valve | 79.4 | 0.00144 |
| 123 | 23-08-2023 | 18-LV-4005 | Control Valve | Valve | 4 | Bypass Valve | 20.6 | 0.00053 |
| 124 | 23-08-2023 | 18-PV-4006 | Control Valve | Valve | 10 | Bypass Valve | 89.7 | 0.00157 |
| 125 | 23-08-2023 | 18-FV-3901 | Control Valve | Valve | 2 | Bypass Valve | 50.1 | 0.00102 |
| 126 | 23-08-2023 | 18-LV-3901 | Control Valve | Valve | 2 | Bypass Valve | 26.4 | 0.00063 |
| 127 | 23-08-2023 | 18-PV-3003 A | Control Valve | Valve | 2 | Bypass Valve | 23.9 | 0.00059 |
| 128 | 23-08-2023 | 18-PV-3003 B | Control Valve | Valve | 4 | Bypass Valve | 80.4 | 0.00145 |
| 129 | 23-08-2023 | 18-PV-3101 A | Control Valve | Valve | 6 | Bypass Valve | 522.1 | 0.00585 |
| 130 | 23-08-2023 | 18-PV-3101 B | Control Valve | Valve | 34 | Bypass Valve | 63.9 | 0.00122 |
| 131 | 23-08-2023 | 18-PV-2307 B | Control Valve | Valve | 34 | Bypass Valve | 56.4 | 0.00111 |
| 132 | 23-08-2023 | 18-PV-3205 A | Control Valve | Valve | 6 | Bypass Valve | 23.1 | 0.00057 |

# BHARAT PETROLEUM CORPORATION LIMITED, BINA-M.P.
## LDAR QUARTERLY REPORT FOR JULY 2023 TO SEPTEMBER 2023
### Monitoring - VOC Plant – HGU

| S.No. | Date | Tag. No. | Equipment | Component | Line size (inch) | Location | Screening Value sv (ppm) | Estimated Emission Rate kg/day |
|---|---|---|---|---|---|---|---|---|
| COMPONENT - VALVE | | | | | | | | |
| 133 | 23-08-2023 | 18-PV-3205 B | Pump Valve | Valve | 4 | Bypass Valve | 80.9 | 0.00146 |
| 134 | 23-08-2023 | 18-PV-3203 A | Pump Valve | Valve | 4 | Bypass Valve | 63.5 | 0.00122 |
| 135 | 23-08-2023 | 18-PV-3203B | Pump Valve | Valve | 1 | Bypass Valve | 20.9 | 0.00053 |
| 136 | 23-08-2023 | 18-PV-3207 A | Pump Valve | Valve | 2 | Bypass Valve | 46.2 | 0.00096 |
| 137 | 23-08-2023 | 18-PV-3205 B | Control Valve | Valve | 2 | Bypass Valve | 13.5 | 0.00038 |
| 138 | 23-08-2023 | 18-PV-3104 | Control Valve | Valve | 1 | Bypass Valve | 6.5 | 0.00022 |
| 139 | 23-08-2023 | 18-PV-3403A | Control Valve | Valve | 1 | Bypass Valve | 23.5 | 0.00058 |
| 140 | 23-08-2023 | 18-PV-3603 | Control Valve | Valve | 6 | Bypass Valve | 20.1 | 0.00052 |
| 141 | 23-08-2023 | 18-FV-3601 B | Control Valve | Valve | 6 | Bypass Valve | 36.4 | 0.00080 |
| 142 | 23-08-2023 | 18-FV-3601 A | Control Valve | Valve | 6 | Bypass Valve | 80.1 | 0.00145 |
| 143 | 23-08-2023 | 18-TV-2801 | Control Valve | Valve | 2 | Bypass Valve | 26.4 | 0.00063 |
| 144 | 23-08-2023 | 18-PDV-4501 | Control Valve | Valve | 2 | Bypass Valve | 20.6 | 0.00053 |
| 145 | 23-08-2023 | 18-LV-2201 | Control Valve | Valve | 14 | Bypass Valve | 23.1 | 0.00057 |
| 146 | 23-08-2023 | 18-FV-4601 | Control Valve | Valve | 4 | Bypass Valve | 49.8 | 0.00101 |
| 147 | 23-08-2023 | 18-FV-2302 A | Control Valve | Valve | 1 | Bypass Valve | 813.2 | 0.00815 |
| 148 | 23-08-2023 | 18-FV-2302 B | Control Valve | Valve | 2 | Bypass Valve | 36.5 | 0.00080 |
| 149 | 23-08-2023 | 18-FV-2501 | Control Valve | Valve | 12 | Bypass Valve | 20.4 | 0.00052 |
| 150 | 23-08-2023 | 18-PV-2405 B | Control Valve | Valve | 1 | Bypass Valve | 16.5 | 0.00044 |
| 151 | 23-08-2023 | 18-LV-4702 | Control Valve | Valve | 4 | Bypass Valve | 23.5 | 0.00058 |
| 152 | 23-08-2023 | 18-PV-2201 B | Control Valve | Valve | 2 | Bypass Valve | 6.5 | 0.00022 |
| 153 | 23-08-2023 | 18-PV-4001 B | Control Valve | Valve | 2 | Bypass Valve | 43.8 | 0.00092 |
| 154 | 23-08-2023 | 18-PV-2804 B | Control Valve | Valve | 2 | Bypass Valve | 93.4 | 0.00162 |
| 155 | 23-08-2023 | 18-PV-4502 B | Control Valve | Valve | 2 | Bypass Valve | 13.5 | 0.00038 |
| 156 | 23-08-2023 | 18-FV-2302 C | Control Valve | Valve | 4 | Bypass Valve | 62.5 | 0.00120 |
| 157 | 23-08-2023 | 18-FV-2502 | Control Valve | Valve | 2 | Bypass Valve | 3.6 | 0.00014 |
| 158 | 23-08-2023 | 18-TV-2803 | Control Valve | Valve | 2 | Bypass Valve | 9.1 | 0.00029 |
| 159 | 23-08-2023 | 18-PV-2201 A | Control Valve | Valve | 1 | Bypass Valve | 246.8 | 0.00335 |
| 160 | 23-08-2023 | 18-PV-3403B | Control Valve | Valve | 1 | Bypass Valve | 53.2 | 0.00107 |
| 161 | 23-08-2023 | 18-LV-4001 A | Control Valve | Valve | 4 | Bypass Valve | 16.7 | 0.00045 |
| 162 | 23-08-2023 | 18-LV-4001 D | Control Valve | Valve | 4 | Bypass Valve | 46.8 | 0.00097 |
| 163 | 23-08-2023 | 18-LV-2101 A | Control Valve | Valve | 8 | Bypass Valve | 93.2 | 0.00162 |
| 164 | 23-08-2023 | 18-FV-2103 | Control Valve | Valve | 2 | Bypass Valve | 13.5 | 0.00038 |
| 165 | 23-08-2023 | 18-FV-2101 | Control Valve | Valve | 34 | Bypass Valve | 26.5 | 0.00063 |
| 166 | 23-08-2023 | 18-LV-2101 B | Control Valve | Valve | 10 | Bypass Valve | 122.5 | 0.00199 |
| 167 | 23-08-2023 | 18-LV-4001 A | Control Valve | Valve | 4 | Bypass Valve | 63.5 | 0.00122 |
| 168 | 23-08-2023 | 18-PV-4001 A | Control Valve | Valve | 4 | Bypass Valve | 20.6 | 0.00053 |
| 169 | 23-08-2023 | 18-LV-4001C | Control Valve | Valve | 2 | Bypass Valve | 23.5 | 0.00058 |
| 170 | 23-08-2023 | 18-TV-2307 | Control Valve | Valve | 6 | Bypass Valve | 46.8 | 0.00097 |
| 171 | 23-08-2023 | 18-FV-2901 | Control Valve | Valve | 6 | Bypass Valve | 93.1 | 0.00162 |
| 172 | 23-08-2023 | 18-TV-2902 A | Control Valve | Valve | 6 | Bypass Valve | 26.4 | 0.00063 |
| 173 | 23-08-2023 | 18-TV-2902 B | Control Valve | Valve | 6 | Bypass Valve | 5.5 | 0.00020 |
| 174 | 23-08-2023 | 18-HV-3513 | Control Valve | Valve | 8 | Bypass Valve | 23.6 | 0.00058 |
| 175 | 23-08-2023 | 18-FV-3501 | Control Valve | Valve | 6 | Bypass Valve | 20.6 | 0.00053 |
| 176 | 23-08-2023 | 18-LV-4001 B | Control Valve | Valve | 4 | Bypass Valve | 35.1 | 0.00078 |
| Total VOC Emission from Valves | | | | | | | | 0.19122 |

# BHARAT PETROLEUM CORPORATION LIMITED, BINA-M.P.
## LDAR QUARTERLY REPORT FOR JULY 2023 TO SEPTEMBER 2023
### Monitoring - VOC Plant – HGU

| S.No. | Date | Tag. No. | Equipment | Component | Line size (inch) | Location | Screening Value sv (ppm) | Estimated Emission Rate kg/day |
|---|---|---|---|---|---|---|---|---|
| COMPONENT - PSV | | | | | | | | |
| 1 | 23-08-2023 | 18-PSV-3330 A | PSV | Flange | 10 | Inlet | 122.3 | 0.00325 |
| | 23-08-2023 | 18-PSV-3330 A | PSV | Flange | 10 | Outlet | 80.2 | 0.00241 |
| 2 | 23-08-2023 | 18-PSV-3331 A | PSV | Flange | 10 | Inlet | 36.5 | 0.00139 |
| | 23-08-2023 | 18-PSV-3331 A | PSV | Flange | 10 | Outlet | 156.2 | 0.00386 |
| 3 | 23-08-2023 | 18-PSV-3330 B | PSV | Flange | 10 | Inlet | 3.6 | 0.00027 |
| | 23-08-2023 | 18-PSV-3330 B | PSV | Flange | 10 | Outlet | 80.4 | 0.00242 |
| 4 | 23-08-2023 | 18-PSV-3331 B | PSV | Flange | 10 | Inlet | 26.5 | 0.00111 |
| | 23-08-2023 | 18-PSV-3331 B | PSV | Flange | 10 | Outlet | 35.2 | 0.00135 |
| 5 | 23-08-2023 | 18-PSV-3208 A | PSV | Flange | 10 | Inlet | 13.6 | 0.00069 |
| | 23-08-2023 | 18-PSV-3208 A | PSV | Flange | 10 | Outlet | 63.9 | 0.00206 |
| 6 | 23-08-2023 | 18-PSV-3208 B | PSV | Flange | 10 | Inlet | 50.4 | 0.00174 |
| | 23-08-2023 | 18-PSV-3208 B | PSV | Flange | 10 | Outlet | 13.2 | 0.00068 |
| 7 | 23-08-2023 | 18-PSV-3108 A | PSV | Flange | 12 | Inlet | 56.8 | 0.00189 |
| | 23-08-2023 | 18-PSV-3108 A | PSV | Flange | 12 | Outlet | 93.1 | 0.00268 |
| 8 | 23-08-2023 | 18-PSV-3108 B | PSV | Flange | 12 | Inlet | 42.5 | 0.00154 |
| | 23-08-2023 | 18-PSV-3108 B | PSV | Flange | 12 | Outlet | 122.6 | 0.00325 |
| 9 | 23-08-2023 | 18-PSV-3108 C | PSV | Flange | 12 | Inlet | 53.9 | 0.00182 |
| | 23-08-2023 | 18-PSV-3108 C | PSV | Flange | 12 | Outlet | 63.2 | 0.00204 |
| 10 | 23-08-2023 | 18-PSV-3202 A | PSV | Flange | 4 | Inlet | 13.5 | 0.00069 |
| | 23-08-2023 | 18-PSV-3202 A | PSV | Flange | 4 | Outlet | 50.4 | 0.00174 |
| 11 | 23-08-2023 | 18-PSV-2304 A | PSV | Flange | 4 | Inlet | 13.6 | 0.00069 |
| | 23-08-2023 | 18-PSV-2304 A | PSV | Flange | 4 | Outlet | 80.4 | 0.00242 |
| 12 | 23-08-2023 | 18-PSV-2304 B | PSV | Flange | 6 | Inlet | 26.6 | 0.00111 |
| | 23-08-2023 | 18-PSV-2304 B | PSV | Flange | 6 | Outlet | 66.5 | 0.00212 |
| 13 | 23-08-2023 | 18-PSV-3202 B | PSV | Flange | 6 | Inlet | 23.5 | 0.00102 |
| | 23-08-2023 | 18-PSV-3202 B | PSV | Flange | 6 | Outlet | 2.6 | 0.00022 |
| 14 | 23-08-2023 | 18-PSV-3703 B | PSV | Flange | 6 | Inlet | 546.2 | 0.00930 |
| | 23-08-2023 | 18-PSV-3703 B | PSV | Flange | 6 | Outlet | 36.9 | 0.00140 |
| 15 | 23-08-2023 | 18-PSV-3703 A | PSV | Flange | 6 | Inlet | 80.4 | 0.00242 |
| | 23-08-2023 | 18-PSV-3703 A | PSV | Flange | 6 | Outlet | 15.2 | 0.00075 |
| 16 | 23-08-2023 | 18-PSV-3704 A | PSV | Flange | 6 | Inlet | 6.5 | 0.00041 |
| | 23-08-2023 | 18-PSV-3704 A | PSV | Flange | 6 | Outlet | 23.5 | 0.00102 |
| 17 | 23-08-2023 | 18-PSV-3704 B | PSV | Flange | 6 | Inlet | 3.6 | 0.00027 |
| | 23-08-2023 | 18-PSV-3704 B | PSV | Flange | 6 | Outlet | 50.1 | 0.00173 |
| 18 | 23-08-2023 | 18-PSV-3708 A | PSV | Flange | 10 | Inlet | 23.5 | 0.00102 |
| | 23-08-2023 | 18-PSV-3708 A | PSV | Flange | 10 | Outlet | 8.7 | 0.00051 |
| 19 | 23-08-2023 | 18-PSV-3708 B | PSV | Flange | 6 | Inlet | 93.1 | 0.00268 |
| | 23-08-2023 | 18-PSV-3708 B | PSV | Flange | 6 | Outlet | 46.5 | 0.00164 |
| 20 | 23-08-2023 | 18-PSV-3706 A | PSV | Flange | 6 | Inlet | 20.5 | 0.00092 |
| | 23-08-2023 | 18-PSV-3706 A | PSV | Flange | 6 | Outlet | 589.6 | 0.00981 |
| 21 | 23-08-2023 | 18-PSV-3706 B | PSV | Flange | 6 | Inlet | 63.5 | 0.00205 |
| | 23-08-2023 | 18-PSV-3706 B | PSV | Flange | 6 | Outlet | 23.1 | 0.00101 |
| 22 | 23-08-2023 | 18-PSV-3707 A | PSV | Flange | 6 | Inlet | 40.6 | 0.00150 |
| | 23-08-2023 | 18-PSV-3707 A | PSV | Flange | 6 | Outlet | 32.5 | 0.00128 |

# BHARAT PETROLEUM CORPORATION LIMITED, BINA-M.P.
## LDAR QUARTERLY REPORT FOR JULY 2023 TO SEPTEMBER 2023
### Monitoring - VOC Plant – HGU

| S.No. | Date | Tag. No. | Equipment | Component | Line size (inch) | Location | Screening Value sv (ppm) | Estimated Emission Rate kg/day |
|---|---|---|---|---|---|---|---|---|
| COMPONENT - PSV | | | | | | | | |
| 23 | 23-08-2023 | 18-PSV-3707 B | PSV | Flange | 2 | Inlet | 6.5 | 0.00041 |
| | 23-08-2023 | 18-PSV-3707 B | PSV | Flange | 2 | Outlet | 23.1 | 0.00101 |
| 24 | 23-08-2023 | 18-PSV-4704 | PSV | Flange | 2 | Inlet | 60.5 | 0.00198 |
| | 23-08-2023 | 18-PSV-4704 | PSV | Flange | 2 | Outlet | 89.7 | 0.00261 |
| 25 | 23-08-2023 | 18-PSV-4702 | PSV | Flange | 2 | Inlet | 156.2 | 0.00386 |
| | 23-08-2023 | 18-PSV-4702 | PSV | Flange | 2 | Outlet | 36.2 | 0.00138 |
| 26 | 23-08-2023 | 18-PSV-3001 | PSV | Flange | 12 | Inlet | 13.9 | 0.00070 |
| | 23-08-2023 | 18-PSV-3001 | PSV | Flange | 12 | Outlet | 879.6 | 0.01299 |
| 27 | 23-08-2023 | 18-PSV-2902 B | PSV | Flange | 12 | Inlet | 35.2 | 0.00135 |
| | 23-08-2023 | 18-PSV-2902 B | PSV | Flange | 12 | Outlet | 15.6 | 0.00076 |
| 28 | 23-08-2023 | 18-PSV-2902 A | PSV | Flange | 6 | Inlet | 43.2 | 0.00156 |
| | 23-08-2023 | 18-PSV-2902 A | PSV | Flange | 6 | Outlet | 30.5 | 0.00122 |
| 29 | 23-08-2023 | 18-PSV-2209 A | PSV | Flange | 6 | Inlet | 122.3 | 0.00325 |
| | 23-08-2023 | 18-PSV-2209 A | PSV | Flange | 6 | Outlet | 63.5 | 0.00205 |
| 30 | 23-08-2023 | 18-PSV-2209 B | PSV | Flange | 6 | Inlet | 20.6 | 0.00093 |
| | 23-08-2023 | 18-PSV-2209 B | PSV | Flange | 6 | Outlet | 43.1 | 0.00156 |
| 31 | 23-08-2023 | 18-PSV-2203 A | PSV | Flange | 6 | Inlet | 20.3 | 0.00092 |
| | 23-08-2023 | 18-PSV-2203 A | PSV | Flange | 6 | Outlet | 69.5 | 0.00218 |
| 32 | 23-08-2023 | 18-PSV-2203 B | PSV | Flange | 10 | Inlet | 43.2 | 0.00156 |
| | 23-08-2023 | 18-PSV-2203 B | PSV | Flange | 10 | Outlet | 5.6 | 0.00037 |
| 33 | 23-08-2023 | 18-PSV-4005 A | PSV | Flange | 10 | Inlet | 3.2 | 0.00025 |
| | 23-08-2023 | 18-PSV-4005 A | PSV | Flange | 10 | Outlet | 20.1 | 0.00091 |
| 34 | 23-08-2023 | 18-PSV-4005 B | PSV | Flange | 2 | Inlet | 46.5 | 0.00164 |
| | 23-08-2023 | 18-PSV-4005 B | PSV | Flange | 2 | Outlet | 813.5 | 0.01230 |
| 35 | 23-08-2023 | 18-PSV-3701 A | PSV | Flange | 2 | Inlet | 62.5 | 0.00202 |
| | 23-08-2023 | 18-PSV-3701 A | PSV | Flange | 2 | Outlet | 23.6 | 0.00102 |
| 36 | 23-08-2023 | 18-PSV-3701 B | PSV | Flange | 6 | Inlet | 40.3 | 0.00149 |
| | 23-08-2023 | 18-PSV-3701 B | PSV | Flange | 6 | Outlet | 2.6 | 0.00022 |
| 37 | 23-08-2023 | 18-PSV-4004 A | PSV | Flange | 6 | Inlet | 5.3 | 0.00036 |
| | 23-08-2023 | 18-PSV-4004 A | PSV | Flange | 6 | Outlet | 62.5 | 0.00202 |
| 38 | 23-08-2023 | 18-PSV-4004 B | PSV | Flange | 2 | Inlet | 8.4 | 0.00049 |
| | 23-08-2023 | 18-PSV-4004 B | PSV | Flange | 2 | Outlet | 2.6 | 0.00022 |
| 39 | 23-08-2023 | 18-PSV-2403 A | PSV | Flange | 2 | Inlet | 53.1 | 0.00181 |
| | 23-08-2023 | 18-PSV-2403 A | PSV | Flange | 2 | Outlet | 8.9 | 0.00051 |
| 40 | 23-08-2023 | 18-PSV-2403 B | PSV | Flange | 10 | Inlet | 6.3 | 0.00040 |
| | 23-08-2023 | 18-PSV-2403 B | PSV | Flange | 10 | Outlet | 23.1 | 0.00101 |
| 41 | 23-08-2023 | 18-PSV-4505 A | PSV | Flange | 10 | Inlet | 5.6 | 0.00037 |
| | 23-08-2023 | 18-PSV-4505 A | PSV | Flange | 10 | Outlet | 5.4 | 0.00036 |
| 42 | 23-08-2023 | 18-PSV-4505 B | PSV | Flange | 8 | Inlet | 80.6 | 0.00242 |
| | 23-08-2023 | 18-PSV-4505 B | PSV | Flange | 8 | Outlet | 23.1 | 0.00101 |
| 43 | 23-08-2023 | 18-PSV-64 D N | PSV | Flange | 10 | Inlet | 60.5 | 0.00198 |
| | 23-08-2023 | 18-PSV-64 D N | PSV | Flange | 10 | Outlet | 23.1 | 0.00101 |
| 44 | 23-08-2023 | 18-PSV-5153 | PSV | Flange | 2 | Inlet | 5.4 | 0.00036 |
| | 23-08-2023 | 18-PSV-5153 | PSV | Flange | 2 | Outlet | 5.6 | 0.00037 |

# BHARAT PETROLEUM CORPORATION LIMITED, BINA-M.P.
## LDAR QUARTERLY REPORT FOR JULY 2023 TO SEPTEMBER 2023
### Monitoring - VOC Plant – HGU

| S.No. | Date | Tag. No. | Equipment | Component | Line size (inch) | Location | Screening Value sv (ppm) | Estimated Emission Rate kg/day |
|---|---|---|---|---|---|---|---|---|
| **COMPONENT - PSV** | | | | | | | | |
| 45 | 23-08-2023 | 18-PSV-5451 B | PSV | Flange | 2 | Inlet | 23.6 | 0.00102 |
| | 23-08-2023 | 18-PSV-5451 B | PSV | Flange | 2 | Outlet | 50.6 | 0.00175 |
| 46 | 23-08-2023 | 18-PSV-5451 A | PSV | Flange | 2 | Inlet | 23.5 | 0.00102 |
| | 23-08-2023 | 18-PSV-5451 A | PSV | Flange | 12 | Outlet | 2.1 | 0.00019 |
| 47 | 23-08-2023 | 18-PSV-2902 D | PSV | Flange | 12 | Inlet | 60.5 | 0.00198 |
| | 23-08-2023 | 18-PSV-2902 D | PSV | Flange | 12 | Outlet | 9.5 | 0.00054 |
| 48 | 23-08-2023 | 18-PSV-2902 C | PSV | Flange | 12 | Inlet | 6.3 | 0.00040 |
| | 23-08-2023 | 18-PSV-2902 C | PSV | Flange | 4 | Outlet | 13.5 | 0.00069 |
| 49 | 23-08-2023 | 18-PSV-4953 B | PSV | Flange | 4 | Inlet | 26.4 | 0.00110 |
| | 23-08-2023 | 18-PSV-4953 B | PSV | Flange | 4 | Outlet | 80.4 | 0.00242 |
| 50 | 23-08-2023 | 18-PSV-4953 A | PSV | Flange | 4 | Inlet | 56.5 | 0.00189 |
| | 23-08-2023 | 18-PSV-4953 A | PSV | Flange | 3 | Outlet | 93.7 | 0.00269 |
| 51 | 23-08-2023 | 18-PSV- 3001 A (N) | PSV | Flange | 3 | Inlet | 80.4 | 0.00242 |
| | 23-08-2023 | 18-PSV- 3001 A (N) | PSV | Flange | 3 | Outlet | 120.6 | 0.00321 |
| 52 | 23-08-2023 | 18-PSV- 3001 B (N) | PSV | Flange | 3 | Inlet | 23.2 | 0.00101 |
| | 23-08-2023 | 18-PSV- 3001 B (N) | PSV | Flange | 3 | Outlet | 20.1 | 0.00091 |
| 53 | 23-08-2023 | 18-PSV- 3108 D (N) | PSV | Flange | 4 | Inlet | 23.6 | 0.00102 |
| | 23-08-2023 | 18-PSV- 3108 D (N) | PSV | Flange | 4 | Outlet | 93.4 | 0.00269 |
| 54 | 23-08-2023 | 18-PSV- 5054 A | PSV | Flange | 4 | Inlet | 25.1 | 0.00107 |
| | 23-08-2023 | 18-PSV- 5054 A | PSV | Flange | 4 | Outlet | 20.1 | 0.00091 |
| 55 | 23-08-2023 | 18-PSV- 5054 B | PSV | Flange | 8 | Inlet | 3.6 | 0.00027 |
| | 23-08-2023 | 18-PSV- 5054 B | PSV | Flange | 8 | Outlet | 50.2 | 0.00174 |
| 56 | 23-08-2023 | 18-PSV- 5054 C | PSV | Flange | 8 | Inlet | 13.5 | 0.00069 |
| | 23-08-2023 | 18-PSV- 5054 C | PSV | Flange | 8 | Outlet | 6.6 | 0.00042 |
| 57 | 23-08-2023 | 18-PSV- 5055 A | PSV | Flange | 8 | Inlet | 53.1 | 0.00181 |
| | 23-08-2023 | 18-PSV- 5055 A | PSV | Flange | 8 | Outlet | 20.4 | 0.00092 |
| 58 | 23-08-2023 | 18-PSV- 5055 B | PSV | Flange | 6 | Inlet | 23.5 | 0.00102 |
| | 23-08-2023 | 18-PSV- 5055 B | PSV | Flange | 6 | Outlet | 6.3 | 0.00040 |
| **Total VOC Emission from PSV** | | | | | | | | **0.19756** |
| **COMPONENT - COMPRESSOR** | | | | | | | | |
| 1 | 23-08-2023 | 18-KA-SC-41 A | Compressor | Pump Seals | - | Compressor | 50.6 | 0.01322 |
| 2 | 23-08-2023 | 18-KA-SC-41 B | Compressor | Pump Seals | - | Compressor | 23.4 | 0.00826 |
| 3 | 23-08-2023 | 18-KA-RP-13 | Compressor | Pump Seals | - | Compressor | 13.2 | 0.00583 |
| 4 | 23-08-2023 | 18-KA-RP-14 A | Compressor | Pump Seals | - | Compressor | 50.6 | 0.01322 |
| 5 | 23-08-2023 | 18-KA-RP-14 B | Compressor | Pump Seals | - | Compressor | 23.8 | 0.00835 |
| 6 | 23-08-2023 | 18-KA-RP-13 C (N) | Compressor | Pump Seals | - | Compressor | 9.6 | 0.00480 |
| **Total VOC Emission from Compressor** | | | | | | | | **0.05367** |

# BHARAT PETROLEUM CORPORATION LIMITED, BINA-M.P.
## LDAR QUARTERLY REPORT FOR JULY 2023 TO SEPTEMBER 2023
### Monitoring - VOC Plant – HGU

| S.No. | Date | Tag. No. | Equipment | Component | Line size (inch) | Location | Screening Value sv (ppm) | Estimated Emission Rate kg/day |
|---|---|---|---|---|---|---|---|---|
| COMPONENT - EXCHANGER | | | | | | | | |
| 1 | 23-08-2023 | 18-EE-00 -31 | Exchanger | Flange | 4 | Inlet | 56.2 | 0.00188 |
| | 23-08-2023 | 18-EE-00 -31 | Exchanger | Flange | 3 | Outlet | 30.2 | 0.00121 |
| 2 | 23-08-2023 | 18-EE-00 -19 | Exchanger | Flange | 8 | Inlet | 8.8 | 0.00051 |
| | 23-08-2023 | 18-EE-00 -19 | Exchanger | Flange | 6 | Outlet | 46.9 | 0.00165 |
| 3 | 23-08-2023 | 18-EE-00 -20 | Exchanger | Flange | 8 | Inlet | 65.4 | 0.00209 |
| | 23-08-2023 | 18-EE-00 -20 | Exchanger | Flange | 6 | Outlet | 13.2 | 0.00068 |
| 4 | 23-08-2023 | 18-EE-00 -27 | Exchanger | Flange | 10 | Inlet | 155.6 | 0.00384 |
| | 23-08-2023 | 18-EE-00 -27 | Exchanger | Flange | 8 | Outlet | 23.4 | 0.00102 |
| 5 | 23-08-2023 | 18-EE-00 -12 | Exchanger | Flange | 36 | Inlet | 20.6 | 0.00093 |
| | 23-08-2023 | 18-EE-00 -12 | Exchanger | Flange | 34 | Outlet | 32.8 | 0.00129 |
| 6 | 23-08-2023 | 18-EE-00 -13 | Exchanger | Flange | 6 | Inlet | 43.1 | 0.00156 |
| | 23-08-2023 | 18-EE-00 -13 | Exchanger | Flange | 4 | Outlet | 25.6 | 0.00108 |
| 7 | 23-08-2023 | 18-EE-00 -11 A N | Exchanger | Flange | 8 | Inlet | 55.2 | 0.00186 |
| | 23-08-2023 | 18-EE-00 -11 A N | Exchanger | Flange | 6 | Outlet | 79.7 | 0.00240 |
| 8 | 23-08-2023 | 18-EE-00 -11 B N | Exchanger | Flange | 6 | Inlet | 80.4 | 0.00242 |
| | 23-08-2023 | 18-EE-00 -11 B N | Exchanger | Flange | 4 | Outlet | 146.2 | 0.00368 |
| 9 | 23-08-2023 | 18-EE-00 -15 | Exchanger | Flange | 6 | Inlet | 53.2 | 0.00181 |
| | 23-08-2023 | 18-EE-00 -15 | Exchanger | Flange | 4 | Outlet | 80.6 | 0.00242 |
| 10 | 23-08-2023 | 18-EE-00 -14 A | Exchanger | Flange | 4 | Inlet | 23.1 | 0.00101 |
| | 23-08-2023 | 18-EE-00 -14 A | Exchanger | Flange | 4 | Outlet | 80.6 | 0.00242 |
| 11 | 23-08-2023 | 18-EE-00 -14 B | Exchanger | Flange | 8 | Inlet | 53.1 | 0.00181 |
| | 23-08-2023 | 18-EE-00 -14 B | Exchanger | Flange | 6 | Outlet | 23.5 | 0.00102 |
| 12 | 23-08-2023 | 18-EE-00 -16 A | Exchanger | Flange | 8 | Inlet | 66.5 | 0.00212 |
| | 23-08-2023 | 18-EE-00 -16 A | Exchanger | Flange | 6 | Outlet | 80.2 | 0.00241 |
| 13 | 23-08-2023 | 18-EE-00 -16 B | Exchanger | Flange | 10 | Inlet | 56.1 | 0.00188 |
| | 23-08-2023 | 18-EE-00 -16 B | Exchanger | Flange | 8 | Outlet | 43.2 | 0.00156 |
| 14 | 23-08-2023 | 18-EE-00 -16 C | Exchanger | Flange | 10 | Inlet | 63.2 | 0.00204 |
| | 23-08-2023 | 18-EE-00 -16 C | Exchanger | Flange | 8 | Outlet | 50.2 | 0.00174 |
| 15 | 23-08-2023 | 18-EE-00 -16 D | Exchanger | Flange | 6 | Inlet | 93.8 | 0.00269 |
| | 23-08-2023 | 18-EE-00 -16 D | Exchanger | Flange | 4 | Outlet | 846.5 | 0.01265 |
| 16 | 23-08-2023 | 18-EE-00 -37 A | Exchanger | Flange | 6 | Inlet | 23.1 | 0.00101 |
| | 23-08-2023 | 18-EE-00 -37 A | Exchanger | Flange | 4 | Outlet | 50.2 | 0.00174 |
| 17 | 23-08-2023 | 18-EE-00 -37 B | Exchanger | Flange | 8 | Inlet | 6.5 | 0.00041 |
| | 23-08-2023 | 18-EE-00 -37 B | Exchanger | Flange | 6 | Outlet | 23.5 | 0.00102 |
| 18 | 23-08-2023 | 18-EE-00-1035 | Exchanger | Flange | 10 | Inlet | 40.3 | 0.00149 |
| | 23-08-2023 | 18-EE-00-1035 | Exchanger | Flange | 8 | Outlet | 25.6 | 0.00108 |
| Total VOC Emission from Exchanger | | | | | | | | 0.07241 |

**Total VOC Emission from HGU in Quarter July 2023 to September 2023 is 0.51486 kg/day**

## BHARAT PETROLEUM CORPORATION LIMITED, BINA-M.P.
## LDAR QUARTERLY REPORT FOR JULY 2023 TO SEPTEMBER 2023

**Monitoring - VOC** **Plant – ETP**

| S.No. | Date | Tag. No. | Equipment | Component | Line size | Location | Screening Value sv (ppm) | Estimated Emission Rate kg/day |
|---|---|---|---|---|---|---|---|---|
| **COMPONENT - PRV** | | | | | | | | |
| 1 | 19-08-2023 | 056-PRV-401 | PRV | Flange | 3 | Inlet | 56.2 | 0.00188 |
| | 19-08-2023 | 056-PRV-401 | PRV | Flange | 3 | Outlet | 36.1 | 0.00138 |
| 2 | 19-08-2023 | 056-PRV-404 | PRV | Flange | 3 | Inlet | 40.6 | 0.00150 |
| | 19-08-2023 | 056-PRV-404 | PRV | Flange | 3 | Outlet | 3.5 | 0.00027 |
| **Total VOC Emission from PRV** | | | | | | | | **0.00502** |
| **COMPONENT - LOCAL VENT** | | | | | | | | |
| 1 | 19-08-2023 | 056-T-09 | Local Vent | Flange | - | Flange | 56.2 | **0.00188** |

**Total VOC Emission from ETP in Quarter July 2023 to September 2023 is 0.00690 kg/day**

# BHARAT PETROLEUM CORPORATION LIMITED, BINA-M.P.
## LDAR QUARTERLY REPORT FOR JULY 2023 TO SEPTEMBER 2023
### Monitoring - VOC Plant – KHDS

| S.No. | Date | Tag. No. | Equipment | Component | Line size (inch) | Location | Screening Value sv (ppm) | Estimated Emission Rate kg/day |
|---|---|---|---|---|---|---|---|---|
| COMPONENT - VALVE | | | | | | | | |
| 1 | 26-08-2023 | 17-PA-CF-103 A | Pump Valve | Valve | 4 | Suc. Valve | 56.2 | 0.00111 |
| 2 | 26-08-2023 | 17-PA-CF-103 B | Pump Valve | Valve | 4 | Suc. Valve | 12.6 | 0.00036 |
| 3 | 26-08-2023 | 17-PA-RP-107 A | Pump Valve | Valve | 2 | Suc. Valve | 25.3 | 0.00061 |
| 4 | 26-08-2023 | 17-PA-RP-107 B | Pump Valve | Valve | 2 | Suc. Valve | 55.9 | 0.00111 |
| 5 | 26-08-2023 | 17-PA-RP-108 A | Pump Valve | Valve | 2 | Suc. Valve | 63.1 | 0.00121 |
| 6 | 26-08-2023 | 17-PA-RP-108 B | Pump Valve | Valve | 2 | Suc. Valve | 20.5 | 0.00052 |
| 7 | 26-08-2023 | 17-PA-CF-104 A | Pump Valve | Valve | 12 | Suc. Valve | 79.5 | 0.00144 |
| 8 | 26-08-2023 | 17-PA-CF-104 B | Pump Valve | Valve | 12 | Suc. Valve | 63.1 | 0.00121 |
| 9 | 26-08-2023 | 17-PA-CF-106 A | Pump Valve | Valve | 4 | Suc. Valve | 4250.0 | 0.02798 |
| 10 | 26-08-2023 | 17-PA-CF-106 B | Pump Valve | Valve | 4 | Suc. Valve | 80.4 | 0.00145 |
| 11 | 26-08-2023 | 17-PA-CF-101 A | Pump Valve | Valve | 10 | Suc. Valve | 13.6 | 0.00039 |
| 12 | 26-08-2023 | 17-PA-CF-101 B | Pump Valve | Valve | 10 | Suc. Valve | 246.5 | 0.00334 |
| 13 | 26-08-2023 | 17-PA-RP-102 A | Pump Valve | Valve | 2 | Suc. Valve | 6.5 | 0.00022 |
| 14 | 26-08-2023 | 17-PA-RP-102 B | Pump Valve | Valve | 2 | Suc. Valve | 80.1 | 0.00145 |
| 15 | 26-08-2023 | 17-PA-MT-125 A | Pump Valve | Valve | 1 | Suc. Valve | 23.6 | 0.00058 |
| 16 | 26-08-2023 | 17-PA-MT-125 B | Pump Valve | Valve | 1 | Suc. Valve | 9.4 | 0.00029 |
| 17 | 26-08-2023 | 17-PA-MT-124 A | Pump Valve | Valve | 1 | Suc. Valve | 83.1 | 0.00149 |
| 18 | 26-08-2023 | 17-PA-MT-124 B | Pump Valve | Valve | 1 | Suc. Valve | 2.2 | 0.00010 |
| 19 | 26-08-2023 | 17-PA-MT-123 A | Pump Valve | Valve | 1 | Suc. Valve | 6.2 | 0.00021 |
| 20 | 26-08-2023 | 17-PA-MT-123 B | Pump Valve | Valve | 1 | Suc. Valve | 13.2 | 0.00038 |
| 21 | 26-08-2023 | 17-PA-RP-105 A | Pump Valve | Valve | 2 | Suc. Valve | 80.4 | 0.00145 |
| 22 | 26-08-2023 | 17-PA-RP-105 B | Pump Valve | Valve | 2 | Suc. Valve | 93.6 | 0.00162 |
| 23 | 26-08-2023 | 17-PA-CF-103 A | Pump Valve | Valve | 3 | Dis. Valve | 133.2 | 0.00211 |
| 24 | 26-08-2023 | 17-PA-CF-103 B | Pump Valve | Valve | 3 | Dis. Valve | 63.2 | 0.00121 |
| 25 | 26-08-2023 | 17-PA-RP-107 A | Pump Valve | Valve | 2 | Dis. Valve | 13.2 | 0.00038 |
| 26 | 26-08-2023 | 17-PA-RP-107 B | Pump Valve | Valve | 2 | Dis. Valve | 50.2 | 0.00102 |
| 27 | 26-08-2023 | 17-PA-RP-108 A | Pump Valve | Valve | 2 | Dis. Valve | 15.4 | 0.00042 |
| 28 | 26-08-2023 | 17-PA-RP-108 B | Pump Valve | Valve | 2 | Dis. Valve | 63.2 | 0.00121 |
| 29 | 26-08-2023 | 17-PA-CF-104 A | Pump Valve | Valve | 10 | Dis. Valve | 30.2 | 0.00070 |
| 30 | 26-08-2023 | 17-PA-CF-104 B | Pump Valve | Valve | 10 | Dis. Valve | 16.5 | 0.00044 |
| 31 | 26-08-2023 | 17-PA-CF-106 A | Pump Valve | Valve | 3 | Dis. Valve | 79.8 | 0.00144 |
| 32 | 26-08-2023 | 17-PA-CF-106 B | Pump Valve | Valve | 3 | Dis. Valve | 3507.0 | 0.02424 |
| 33 | 26-08-2023 | 17-PA-CF-101 A | Pump Valve | Valve | 6 | Dis. Valve | 42.5 | 0.00090 |
| 34 | 26-08-2023 | 17-PA-CF-101 B | Pump Valve | Valve | 6 | Dis. Valve | 30.6 | 0.00071 |
| 35 | 26-08-2023 | 17-PA-RP-102 A | Pump Valve | Valve | 2 | Dis. Valve | 63.1 | 0.00121 |
| 36 | 26-08-2023 | 17-PA-RP-102 B | Pump Valve | Valve | 2 | Dis. Valve | 56.2 | 0.00111 |
| 37 | 26-08-2023 | 17-PA-MT-125 A | Pump Valve | Valve | 1 | Dis. Valve | 30.2 | 0.00070 |
| 38 | 26-08-2023 | 17-PA-MT-125 B | Pump Valve | Valve | 1 | Dis. Valve | 144.5 | 0.00225 |
| 39 | 26-08-2023 | 17-PA-MT-124 A | Pump Valve | Valve | 1 | Dis. Valve | 50.2 | 0.00102 |
| 40 | 26-08-2023 | 17-PA-MT-124 B | Pump Valve | Valve | 1 | Dis. Valve | 13.6 | 0.00039 |
| 41 | 26-08-2023 | 17-PA-MT-123 A | Pump Valve | Valve | 1 | Dis. Valve | 6.4 | 0.00022 |
| 42 | 26-08-2023 | 17-PA-MT-123 B | Pump Valve | Valve | 1 | Dis. Valve | 52.1 | 0.00105 |
| 43 | 26-08-2023 | 17-PA-RP-105 A | Pump Valve | Valve | 2 | Dis. Valve | 30.2 | 0.00070 |
| 44 | 26-08-2023 | 17-PA-RP-105 B | Pump Valve | Valve | 2 | Dis. Valve | 16.5 | 0.00044 |
| 45 | 26-08-2023 | 17-PA-SM-121 A | Pump Valve | Valve | 4 | Dis. Valve | 23.4 | 0.00058 |
| 46 | 26-08-2023 | 17-PA-SM-121 B | Pump Valve | Valve | 4 | Dis. Valve | 60.1 | 0.00117 |
| 47 | 26-08-2023 | 17-FV-1102 | Control Valve | Valve | 4 | Control Valve | 23.5 | 0.00058 |
| 48 | 26-08-2023 | 17-FV-1101 | Control Valve | Valve | 6 | Control Valve | 47.8 | 0.00098 |
| 49 | 26-08-2023 | 17-PV-1201 A | Control Valve | Valve | 2 | Control Valve | 14.6 | 0.00041 |
| 50 | 26-08-2023 | 17-PV-1201 B | Control Valve | Valve | 3 | Control Valve | 102.5 | 0.00174 |
| 51 | 26-08-2023 | 17-FV-1201 | Control Valve | Valve | 6 | Control Valve | 3.8 | 0.00015 |

# BHARAT PETROLEUM CORPORATION LIMITED, BINA-M.P.
## LDAR QUARTERLY REPORT FOR JULY 2023 TO SEPTEMBER 2023
### Monitoring - VOC Plant – KHDS

| S.No. | Date | Tag. No. | Equipment | Component | Line size (inch) | Location | Screening Value sv (ppm) | Estimated Emission Rate kg/day |
|---|---|---|---|---|---|---|---|---|
| COMPONENT - VALVE | | | | | | | | |
| 52 | 26-08-2023 | 17-FV-1203 | Control Valve | Valve | 4 | Control Valve | 8.4 | 0.00027 |
| 53 | 26-08-2023 | 17-FV-1205 | Control Valve | Valve | 6 | Control Valve | 56.2 | 0.00111 |
| 54 | 26-08-2023 | 17-HV-1301 | Control Valve | Valve | 4 | Control Valve | 6.6 | 0.00022 |
| 55 | 26-08-2023 | 17-LV-1601 | Control Valve | Valve | 3 | Control Valve | 53.1 | 0.00106 |
| 56 | 26-08-2023 | 17-FV-1702 | Control Valve | Valve | 2 | Control Valve | 20.2 | 0.00052 |
| 57 | 26-08-2023 | 17-FV-1701 | Control Valve | Valve | 3 | Control Valve | 13.5 | 0.00038 |
| 58 | 26-08-2023 | 17-LV-1701 | Control Valve | Valve | 2 | Control Valve | 46.5 | 0.00096 |
| 59 | 26-08-2023 | 17-FV-1801 | Control Valve | Valve | 4 | Control Valve | 62.1 | 0.00120 |
| 60 | 26-08-2023 | 17-FV-1902 | Control Valve | Valve | 2 | Control Valve | 93.5 | 0.00162 |
| 61 | 26-08-2023 | 17-FV-1901 | Control Valve | Valve | 4 | Control Valve | 16.5 | 0.00044 |
| 62 | 26-08-2023 | 17-FV-1904 | Control Valve | Valve | 6 | Control Valve | 23.5 | 0.00058 |
| 63 | 26-08-2023 | 17-PV-1901 A | Control Valve | Valve | 6 | Control Valve | 155.4 | 0.00237 |
| 64 | 26-08-2023 | 17-PV-1901 B | Control Valve | Valve | 3 | Control Valve | 632.2 | 0.00675 |
| 65 | 26-08-2023 | 17-FV-2101 | Control Valve | Valve | 2 | Control Valve | 80.5 | 0.00145 |
| 66 | 26-08-2023 | 17-FV-2201 A | Control Valve | Valve | 6 | Control Valve | 17.8 | 0.00047 |
| 67 | 26-08-2023 | 17-FV-2201 B | Control Valve | Valve | 6 | Control Valve | 3375.0 | 0.02356 |
| 68 | 26-08-2023 | 17-PV-2306 | Control Valve | Valve | 3 | Control Valve | 50.2 | 0.00102 |
| 69 | 26-08-2023 | 17-FV-2301 | Control Valve | Valve | 4 | Control Valve | 36.2 | 0.00080 |
| 70 | 26-08-2023 | 17-FV-2402 | Control Valve | Valve | 3 | Control Valve | 13.2 | 0.00038 |
| 71 | 26-08-2023 | 17-FV-2401 | Control Valve | Valve | 6 | Control Valve | 6.1 | 0.00021 |
| 72 | 26-08-2023 | 17-FV-2403 | Control Valve | Valve | 3 | Control Valve | 42.5 | 0.00090 |
| 73 | 26-08-2023 | 17-FV-2404 | Control Valve | Valve | 6 | Control Valve | 46.2 | 0.00096 |
| 74 | 26-08-2023 | 17-FV-2501 | Control Valve | Valve | 8 | Control Valve | 13.4 | 0.00038 |
| 75 | 26-08-2023 | 17-TV-2601 B | Control Valve | Valve | 6 | Control Valve | 60.5 | 0.00117 |
| 76 | 26-08-2023 | 17-TV-2601 A | Control Valve | Valve | 4 | Control Valve | 23.5 | 0.00058 |
| 77 | 26-08-2023 | 17-PV-2701 | Control Valve | Valve | 2 | Control Valve | 64.2 | 0.00123 |
| 78 | 26-08-2023 | 17-FV-2703 | Control Valve | Valve | 4 | Control Valve | 50.1 | 0.00102 |
| 79 | 26-08-2023 | 17-PV-3102 | Control Valve | Valve | 2 | Control Valve | 23.5 | 0.00058 |
| 80 | 26-08-2023 | 17-LV-3101 | Control Valve | Valve | 2 | Control Valve | 20.2 | 0.00052 |
| 81 | 26-08-2023 | 17-PV-3101 | Control Valve | Valve | 2 | Control Valve | 3515.0 | 0.02428 |
| 82 | 26-08-2023 | 17-PV-3704 | Control Valve | Valve | 3 | Control Valve | 26.5 | 0.00063 |
| 83 | 26-08-2023 | 17-PDV-3702 | Control Valve | Valve | 3 | Control Valve | 42.1 | 0.00089 |
| 84 | 26-08-2023 | 17-LV-3704 | Control Valve | Valve | 2 | Control Valve | 693.2 | 0.00723 |
| 85 | 26-08-2023 | 17-PV-3701 | Control Valve | Valve | 2 | Control Valve | 50.2 | 0.00102 |
| 86 | 26-08-2023 | 17-PDV-3802 | Control Valve | Valve | 2 | Control Valve | 13.5 | 0.00038 |
| 87 | 26-08-2023 | 17-PV-3804 | Control Valve | Valve | 3 | Control Valve | 26.5 | 0.00063 |
| 88 | 26-08-2023 | 17-PV-3801 | Control Valve | Valve | 4 | Control Valve | 50.1 | 0.00102 |
| 89 | 26-08-2023 | 17-FV-6502 | Control Valve | Valve | 4 | Control Valve | 13.4 | 0.00038 |
| 90 | 26-08-2023 | 17-UV-1151 | Control Valve | Valve | 6 | Control Valve | 6.3 | 0.00022 |
| 91 | 26-08-2023 | 17-UV-1101 | Control Valve | Valve | 6 | Control Valve | 62.5 | 0.00120 |
| 92 | 26-08-2023 | 17-UV-1301 | Control Valve | Valve | 2 | Control Valve | 80.4 | 0.00145 |
| 93 | 26-08-2023 | 17-UV-1402 B | Control Valve | Valve | 2 | Control Valve | 23.6 | 0.00058 |
| 94 | 26-08-2023 | 17-UV-1403 | Control Valve | Valve | 6 | Control Valve | 50.1 | 0.00102 |
| 95 | 26-08-2023 | 17-UV-1601 | Control Valve | Valve | 6 | Control Valve | 23.5 | 0.00058 |
| 96 | 26-08-2023 | 17-UV-1602 | Control Valve | Valve | 8 | Control Valve | 63.4 | 0.00121 |
| 97 | 26-08-2023 | 17-UV-1651 | Control Valve | Valve | 8 | Control Valve | 89.6 | 0.00157 |
| 98 | 26-08-2023 | 17-UV-1702 | Control Valve | Valve | 2 | Control Valve | 43.1 | 0.00091 |
| 99 | 26-08-2023 | 17-UZV-1701 | Control Valve | Valve | 4 | Control Valve | 20.5 | 0.00052 |
| 100 | 26-08-2023 | 17-UV-1802 | Control Valve | Valve | 2 | Control Valve | 23.6 | 0.00058 |
| 101 | 26-08-2023 | 17-UV-1801 | Control Valve | Valve | 4 | Control Valve | 36.5 | 0.00080 |
| 102 | 26-08-2023 | 17-UV-1901 | Control Valve | Valve | 4 | Control Valve | 43.8 | 0.00092 |

# BHARAT PETROLEUM CORPORATION LIMITED, BINA-M.P.
## LDAR QUARTERLY REPORT FOR JULY 2023 TO SEPTEMBER 2023
### Monitoring - VOC Plant – KHDS

| S.No. | Date | Tag. No. | Equipment | Component | Line size (inch) | Location | Screening Value sv (ppm) | Estimated Emission Rate kg/day |
|---|---|---|---|---|---|---|---|---|
| COMPONENT - VALVE | | | | | | | | |
| 103 | 26-08-2023 | 17-UV-1902 | Control Valve | Valve | 2 | Control Valve | 80.5 | 0.00145 |
| 104 | 26-08-2023 | 17-UV-2202 | Control Valve | Valve | 2 | Control Valve | 26.5 | 0.00063 |
| 105 | 26-08-2023 | 17-UV-2203 | Control Valve | Valve | 6 | Control Valve | 63.2 | 0.00121 |
| 106 | 26-08-2023 | 17-UV-2302 | Control Valve | Valve | 6 | Control Valve | 3.5 | 0.00014 |
| 107 | 26-08-2023 | 17-UV-2601 | Control Valve | Valve | 4 | Control Valve | 26.5 | 0.00063 |
| 108 | 26-08-2023 | 17-UV-3001 A | Control Valve | Valve | 3 | Control Valve | 36.2 | 0.00080 |
| 109 | 26-08-2023 | 17-UV-3001 B | Control Valve | Valve | 3 | Control Valve | 13.2 | 0.00038 |
| 110 | 26-08-2023 | 17-UV-3707 | Control Valve | Valve | 3 | Control Valve | 40.1 | 0.00086 |
| 111 | 26-08-2023 | 17-UV-3703 | Control Valve | Valve | 3 | Control Valve | 23.6 | 0.00058 |
| 112 | 26-08-2023 | 17-UV-3704 | Control Valve | Valve | 2 | Control Valve | 50.2 | 0.00102 |
| 113 | 26-08-2023 | 17-UV-3708 | Control Valve | Valve | 3 | Control Valve | 6.5 | 0.00022 |
| 114 | 26-08-2023 | 17-UV-3705 | Control Valve | Valve | 4 | Control Valve | 23.8 | 0.00058 |
| 115 | 26-08-2023 | 17-UV-3706 | Control Valve | Valve | 2 | Control Valve | 90.1 | 0.00158 |
| 116 | 26-08-2023 | 17-UV-3701 | Control Valve | Valve | 4 | Control Valve | 23.6 | 0.00058 |
| 117 | 26-08-2023 | 17-UV-3702 | Control Valve | Valve | 6 | Control Valve | 20.6 | 0.00053 |
| 118 | 26-08-2023 | 17-UV-3807 | Control Valve | Valve | 3 | Control Valve | 53.2 | 0.00107 |
| 119 | 26-08-2023 | 17-UV-3808 | Control Valve | Valve | 4 | Control Valve | 3.1 | 0.00013 |
| 120 | 26-08-2023 | 17-UV-3805 | Control Valve | Valve | 4 | Control Valve | 20.5 | 0.00052 |
| 121 | 26-08-2023 | 17-UV-3806 | Control Valve | Valve | 2 | Control Valve | 64.2 | 0.00123 |
| 122 | 26-08-2023 | 17-UV-3801 | Control Valve | Valve | 4 | Control Valve | 155.4 | 0.00237 |
| 123 | 26-08-2023 | 17-UV-3802 | Control Valve | Valve | 4 | Control Valve | 63.9 | 0.00122 |
| 124 | 26-08-2023 | 17-UV-3803 | Control Valve | Valve | 2 | Control Valve | 80.1 | 0.00145 |
| 125 | 26-08-2023 | 17-UV-3809 | Control Valve | Valve | 2 | Control Valve | 25.3 | 0.00061 |
| 126 | 26-08-2023 | 17-UV-3804 | Control Valve | Valve | 2 | Control Valve | 62.5 | 0.00120 |
| 127 | 26-08-2023 | 17-UV-3810 | Control Valve | Valve | 2 | Control Valve | 13.2 | 0.00038 |
| 128 | 26-08-2023 | 17-LT-2601 | Control Valve | Valve | 3 | Control Valve | 60.3 | 0.00117 |
| 129 | 26-08-2023 | 17-LT-2602 | Control Valve | Valve | 3 | Control Valve | 26.8 | 0.00064 |
| 130 | 26-08-2023 | 17-LG-2606 | Control Valve | Valve | 3 | Control Valve | 93.1 | 0.00162 |
| 131 | 26-08-2023 | 17-FV-1102 | Control Valve | Valve | 2 | Bypass Valve | 20.6 | 0.00053 |
| 132 | 26-08-2023 | 17-FV-1101 | Control Valve | Valve | 4 | Bypass Valve | 53.1 | 0.00106 |
| 133 | 26-08-2023 | 17-PV-1201 A | Control Valve | Valve | 2 | Bypass Valve | 50.7 | 0.00103 |
| 134 | 26-08-2023 | 17-PV-1201 B | Control Valve | Valve | 2 | Bypass Valve | 69.5 | 0.00130 |
| 135 | 26-08-2023 | 17-FV-1201 | Control Valve | Valve | 4 | Bypass Valve | 3320.0 | 0.02327 |
| 136 | 26-08-2023 | 17-FV-1203 | Control Valve | Valve | 2 | Bypass Valve | 50.1 | 0.00102 |
| 137 | 26-08-2023 | 17-FV-1205 | Control Valve | Valve | 4 | Bypass Valve | 20.6 | 0.00053 |
| 138 | 26-08-2023 | 17-HV-1301 | Control Valve | Valve | 2 | Bypass Valve | 3.5 | 0.00014 |
| 139 | 26-08-2023 | 17-LV-1601 | Control Valve | Valve | 2 | Bypass Valve | 23.6 | 0.00058 |
| 140 | 26-08-2023 | 17-FV-1702 | Control Valve | Valve | 2 | Bypass Valve | 25.6 | 0.00062 |
| 141 | 26-08-2023 | 17-FV-1701 | Control Valve | Valve | 2 | Bypass Valve | 93.5 | 0.00162 |
| 142 | 26-08-2023 | 17-LV-1701 | Control Valve | Valve | 2 | Bypass Valve | 26.5 | 0.00063 |
| 143 | 26-08-2023 | 17-FV-1801 | Control Valve | Valve | 2 | Bypass Valve | 23.6 | 0.00058 |
| 144 | 26-08-2023 | 17-FV-1902 | Control Valve | Valve | 2 | Bypass Valve | 56.8 | 0.00112 |
| 145 | 26-08-2023 | 17-FV-1901 | Control Valve | Valve | 2 | Bypass Valve | 53.1 | 0.00106 |
| 146 | 26-08-2023 | 17-FV-1904 | Control Valve | Valve | 4 | Bypass Valve | 26.4 | 0.00063 |
| 147 | 26-08-2023 | 17-PV-1901 A | Control Valve | Valve | 4 | Bypass Valve | 26.5 | 0.00063 |
| 148 | 26-08-2023 | 17-PV-1901 B | Control Valve | Valve | 2 | Bypass Valve | 93.2 | 0.00162 |
| 149 | 26-08-2023 | 17-FV-2101 | Control Valve | Valve | 2 | Bypass Valve | 23.6 | 0.00058 |
| 150 | 26-08-2023 | 17-FV-2201 A | Control Valve | Valve | 4 | Bypass Valve | 3710.0 | 0.02528 |

# BHARAT PETROLEUM CORPORATION LIMITED, BINA-M.P.
## LDAR QUARTERLY REPORT FOR JULY 2023 TO SEPTEMBER 2023
### Monitoring - VOC Plant – KHDS

| S.No. | Date | Tag. No. | Equipment | Component | Line size (inch) | Location | Screening Value sv (ppm) | Estimated Emission Rate kg/day |
|---|---|---|---|---|---|---|---|---|
| **COMPONENT - VALVE** | | | | | | | | |
| 151 | 26-08-2023 | 17-FV-2201 B | Control Valve | Valve | 4 | Bypass Valve | 43.1 | 0.00091 |
| 152 | 26-08-2023 | 17-PV-2306 | Control Valve | Valve | 2 | Bypass Valve | 20.6 | 0.00053 |
| 153 | 26-08-2023 | 17-FV-2301 | Control Valve | Valve | 2 | Bypass Valve | 36.5 | 0.00080 |
| 154 | 26-08-2023 | 17-FV-2402 | Control Valve | Valve | 2 | Bypass Valve | 80.1 | 0.00145 |
| 155 | 26-08-2023 | 17-FV-2401 | Control Valve | Valve | 4 | Bypass Valve | 26.4 | 0.00063 |
| 156 | 26-08-2023 | 17-FV-2403 | Control Valve | Valve | 2 | Bypass Valve | 233.6 | 0.00321 |
| 157 | 26-08-2023 | 17-FV-2404 | Control Valve | Valve | 4 | Bypass Valve | 50.6 | 0.00103 |
| 158 | 26-08-2023 | 17-FV-2501 | Control Valve | Valve | 6 | Bypass Valve | 23.9 | 0.00059 |
| 159 | 26-08-2023 | 17-TV-2601 B | Control Valve | Valve | 4 | Bypass Valve | 6.5 | 0.00022 |
| 160 | 26-08-2023 | 17-TV-2601 A | Control Valve | Valve | 2 | Bypass Valve | 80.4 | 0.00145 |
| 161 | 26-08-2023 | 17-PV-2701 | Control Valve | Valve | 2 | Bypass Valve | 13.5 | 0.00038 |
| 162 | 26-08-2023 | 17-FV-2703 | Control Valve | Valve | 2 | Bypass Valve | 62.2 | 0.00120 |
| 163 | 26-08-2023 | 17-PV-3102 | Control Valve | Valve | 2 | Bypass Valve | 36.1 | 0.00080 |
| 164 | 26-08-2023 | 17-LV-3101 | Control Valve | Valve | 2 | Bypass Valve | 57.5 | 0.00113 |
| 165 | 26-08-2023 | 17-PV-3101 | Control Valve | Valve | 2 | Bypass Valve | 14.6 | 0.00041 |
| 166 | 26-08-2023 | 17-PV-3704 | Control Valve | Valve | 3 | Bypass Valve | 22.8 | 0.00057 |
| 167 | 26-08-2023 | 17-PDV-3702 | Control Valve | Valve | 3 | Bypass Valve | 14.3 | 0.00040 |
| 168 | 26-08-2023 | 17-LV-3704 | Control Valve | Valve | 2 | Bypass Valve | 1.5 | 0.00007 |
| 169 | 26-08-2023 | 17-PV-3701 | Control Valve | Valve | 2 | Bypass Valve | 22.1 | 0.00055 |
| 170 | 26-08-2023 | 17-PDV-3802 | Control Valve | Valve | 2 | Bypass Valve | 48.6 | 0.00100 |
| **Total VOC Emission from Valves** | | | | | | | | **0.30473** |
| **COMPONENT - COMPRESSOR** | | | | | | | | |
| 1 | 26-08-2023 | 17-KM-RP-101 A | Compessor | Pump Seals | - | Compessor | 56.8 | 0.01419 |
| 2 | 26-08-2023 | 17-KM-RP-101 B | Compessor | Pump Seals | - | Compessor | 15.4 | 0.00640 |
| **Total VOC Emission from Compressor** | | | | | | | | **0.02059** |

# BHARAT PETROLEUM CORPORATION LIMITED, BINA-M.P.
## LDAR QUARTERLY REPORT FOR JULY 2023 TO SEPTEMBER 2023
### Monitoring - VOC Plant – KHDS

| S.No. | Date | Tag. No. | Equipment | Component | Line size (inch) | Location | Screening Value sv (ppm) | Estimated Emission Rate kg/day |
|---|---|---|---|---|---|---|---|---|
| COMPONENT - PSV | | | | | | | | |
| 1 | 26-08-2023 | 17-PSV-2702 A | PSV | Flange | 3 | Inlet | 156.3 | 0.00386 |
| | 26-08-2023 | 17-PSV-2702 A | PSV | Flange | 4 | Outlet | 14.2 | 0.00071 |
| 2 | 26-08-2023 | 17-PSV-2702 B | PSV | Flange | 3 | Inlet | 16.9 | 0.00081 |
| | 26-08-2023 | 17-PSV-2702 B | PSV | Flange | 4 | Outlet | 28.1 | 0.00115 |
| 3 | 26-08-2023 | 17-PSV-2601 A | PSV | Flange | 6 | Inlet | 20.6 | 0.00093 |
| | 26-08-2023 | 17-PSV-2601 A | PSV | Flange | 10 | Outlet | 50.2 | 0.00174 |
| 4 | 26-08-2023 | 17-PSV-2601 B | PSV | Flange | 6 | Inlet | 36.5 | 0.00139 |
| | 26-08-2023 | 17-PSV-2601 B | PSV | Flange | 10 | Outlet | 12.5 | 0.00065 |
| 5 | 26-08-2023 | 17-PSV-3101 A | PSV | Flange | 3 | Inlet | 89.4 | 0.00260 |
| | 26-08-2023 | 17-PSV-3101 A | PSV | Flange | 6 | Outlet | 63.1 | 0.00204 |
| 6 | 26-08-2023 | 17-PSV-3101 B | PSV | Flange | 3 | Inlet | 20.6 | 0.00093 |
| | 26-08-2023 | 17-PSV-3101 B | PSV | Flange | 6 | Outlet | 53.4 | 0.00181 |
| 7 | 26-08-2023 | 17-PSV-3001 A | PSV | Flange | 2 | Inlet | 89.4 | 0.00260 |
| | 26-08-2023 | 17-PSV-3001 A | PSV | Flange | 2 | Outlet | 50.2 | 0.00174 |
| 8 | 26-08-2023 | 17-PSV-3001 B | PSV | Flange | 2 | Inlet | 133.6 | 0.00345 |
| | 26-08-2023 | 17-PSV-3001 B | PSV | Flange | 2 | Outlet | 52.8 | 0.00180 |
| 9 | 26-08-2023 | 17-PSV-3001 C | PSV | Flange | 2 | Inlet | 46.8 | 0.00165 |
| | 26-08-2023 | 17-PSV-3001 C | PSV | Flange | 2 | Outlet | 93.4 | 0.00269 |
| 10 | 26-08-2023 | 17-PSV-3001 D | PSV | Flange | 2 | Inlet | 16.5 | 0.00079 |
| | 26-08-2023 | 17-PSV-3001 D | PSV | Flange | 2 | Outlet | 23.6 | 0.00102 |
| 11 | 26-08-2023 | 17-PSV-1801 C | PSV | Flange | 3 | Inlet | 80.4 | 0.00242 |
| | 26-08-2023 | 17-PSV-1801 C | PSV | Flange | 6 | Outlet | 156.9 | 0.00387 |
| 12 | 26-08-2023 | 17-PSV-1801 D | PSV | Flange | 3 | Inlet | 80.6 | 0.00242 |
| | 26-08-2023 | 17-PSV-1801 D | PSV | Flange | 6 | Outlet | 32.5 | 0.00128 |
| 13 | 26-08-2023 | 17-PSV-2801 A | PSV | Flange | 2 | Inlet | 50.1 | 0.00173 |
| | 26-08-2023 | 17-PSV-2801 A | PSV | Flange | 3 | Outlet | 23.6 | 0.00102 |
| 14 | 26-08-2023 | 17-PSV-2801 B | PSV | Flange | 2 | Inlet | 80.4 | 0.00242 |
| | 26-08-2023 | 17-PSV-2801 B | PSV | Flange | 3 | Outlet | 93.4 | 0.00269 |
| 15 | 26-08-2023 | 17-PSV-1801 A | PSV | Flange | 3 | Inlet | 13.6 | 0.00069 |
| | 26-08-2023 | 17-PSV-1801 A | PSV | Flange | 6 | Outlet | 26.5 | 0.00111 |
| 16 | 26-08-2023 | 17-PSV-1801 B | PSV | Flange | 3 | Inlet | 35.4 | 0.00136 |
| | 26-08-2023 | 17-PSV-1801 B | PSV | Flange | 6 | Outlet | 216.5 | 0.00485 |
| 17 | 26-08-2023 | 17-PSV-1821 A | PSV | Flange | 3 | Inlet | 32.1 | 0.00127 |
| | 26-08-2023 | 17-PSV-1821 A | PSV | Flange | 6 | Outlet | 60.2 | 0.00197 |
| 18 | 26-08-2023 | 17-PSV-2602 A | PSV | Flange | 4 | Inlet | 43.5 | 0.00157 |
| | 26-08-2023 | 17-PSV-2602 A | PSV | Flange | 6 | Outlet | 13.2 | 0.00068 |
| 19 | 26-08-2023 | 17-PSV-2602 B | PSV | Flange | 4 | Inlet | 50.1 | 0.00173 |
| | 26-08-2023 | 17-PSV-2602 B | PSV | Flange | 6 | Outlet | 23.5 | 0.00102 |
| 20 | 26-08-2023 | 17-PSV-1106 A | PSV | Flange | 3 | Inlet | 93.4 | 0.00269 |
| | 26-08-2023 | 17-PSV-1106 A | PSV | Flange | 4 | Outlet | 56.2 | 0.00188 |
| 21 | 26-08-2023 | 17-PSV-1106 B | PSV | Flange | 3 | Inlet | 30.6 | 0.00123 |
| | 26-08-2023 | 17-PSV-1106 B | PSV | Flange | 4 | Outlet | 11.2 | 0.00060 |
| 22 | 26-08-2023 | 17-PSV-1821 B | PSV | Flange | 3 | Inlet | 5.9 | 0.00039 |
| | 26-08-2023 | 17-PSV-1821 B | PSV | Flange | 6 | Outlet | 31.5 | 0.00125 |

# BHARAT PETROLEUM CORPORATION LIMITED, BINA-M.P.
## LDAR QUARTERLY REPORT FOR JULY 2023 TO SEPTEMBER 2023
### Monitoring - VOC Plant – KHDS

| S.No. | Date | Tag. No. | Equipment | Component | Line size (inch) | Location | Screening Value sv (ppm) | Estimated Emission Rate kg/day |
|---|---|---|---|---|---|---|---|---|
| COMPONENT - PSV | | | | | | | | |
| 23 | 26-08-2023 | 17-PSV-3401 A | PSV | Flange | 3 | Inlet | 80.4 | 0.00242 |
| | 26-08-2023 | 17-PSV-3401 A | PSV | Flange | 4 | Outlet | 16.5 | 0.00079 |
| 24 | 26-08-2023 | 17-PSV-3401 B | PSV | Flange | 3 | Inlet | 23.8 | 0.00103 |
| | 26-08-2023 | 17-PSV-3401 B | PSV | Flange | 4 | Outlet | 93.4 | 0.00269 |
| 25 | 26-08-2023 | 17-PSV-7201 | PSV | Flange | 3 | Inlet | 52.1 | 0.00178 |
| | 26-08-2023 | 17-PSV-7201 | PSV | Flange | 4 | Outlet | 22.6 | 0.00099 |
| 26 | 26-08-2023 | 17-PSV-1901 A | PSV | Flange | 2 | Inlet | 35.2 | 0.00135 |
| | 26-08-2023 | 17-PSV-1901 A | PSV | Flange | 3 | Outlet | 6.1 | 0.00039 |
| 27 | 26-08-2023 | 17-PSV-1901 B | PSV | Flange | 2 | Inlet | 23.5 | 0.00102 |
| | 26-08-2023 | 17-PSV-1901 B | PSV | Flange | 3 | Outlet | 6.4 | 0.00041 |
| 28 | 26-08-2023 | 17-PSV-1201 A | PSV | Flange | 8 | Inlet | 233.8 | 0.00512 |
| | 26-08-2023 | 17-PSV-1201 A | PSV | Flange | 10 | Outlet | 93.4 | 0.00269 |
| 29 | 26-08-2023 | 17-PSV-1201 B | PSV | Flange | 8 | Inlet | 26.5 | 0.00111 |
| | 26-08-2023 | 17-PSV-1201 B | PSV | Flange | 10 | Outlet | 13.5 | 0.00069 |
| 30 | 26-08-2023 | 17-PSV-1601 A | PSV | Flange | 6 | Inlet | 26.4 | 0.00110 |
| | 26-08-2023 | 17-PSV-1601 A | PSV | Flange | 10 | Outlet | 31.2 | 0.00124 |
| 31 | 26-08-2023 | 17-PSV-1601 B | PSV | Flange | 6 | Inlet | 5.5 | 0.00037 |
| | 26-08-2023 | 17-PSV-1601 B | PSV | Flange | 10 | Outlet | 46.1 | 0.00163 |
| 32 | 26-08-2023 | 17-PSV-2005 A | PSV | Flange | 8 | Inlet | 20.3 | 0.00092 |
| | 26-08-2023 | 17-PSV-2005 A | PSV | Flange | 18 | Outlet | 66.9 | 0.00212 |
| 33 | 26-08-2023 | 17-PSV-2005 B | PSV | Flange | 8 | Inlet | 83.4 | 0.00248 |
| | 26-08-2023 | 17-PSV-2005 B | PSV | Flange | 18 | Outlet | 13.5 | 0.00069 |
| 34 | 26-08-2023 | 17-PSV-2101 A | PSV | Flange | 8 | Inlet | 246.5 | 0.00531 |
| | 26-08-2023 | 17-PSV-2101 A | PSV | Flange | 10 | Outlet | 23.1 | 0.00101 |
| 35 | 26-08-2023 | 17-PSV-2101 B | PSV | Flange | 8 | Inlet | 16.8 | 0.00080 |
| | 26-08-2023 | 17-PSV-2101 B | PSV | Flange | 10 | Outlet | 30.4 | 0.00122 |
| Total VOC Emission from PSV | | | | | | | | 0.11787 |

# BHARAT PETROLEUM CORPORATION LIMITED, BINA-M.P.
## LDAR QUARTERLY REPORT FOR JULY 2023 TO SEPTEMBER 2023
### Monitoring - VOC Plant – KHDS

| S.No. | Date | Tag. No. | Equipment | Component | Line size (inch) | Location | Screening Value sv (ppm) | Estimated Emission Rate kg/day |
|---|---|---|---|---|---|---|---|---|
| COMPONENT - EXCHANGER | | | | | | | | |
| 1 | 26-08-2023 | 17-EE-00-104 | Exchanger | Flange | 6 | Inlet | 80.6 | 0.00242 |
| | 26-08-2023 | 17-EE-00-104 | Exchanger | Flange | 8 | Outlet | 15.3 | 0.00075 |
| 2 | 26-08-2023 | 17-EE-00-109 | Exchanger | Flange | 3 | Inlet | 22.8 | 0.00100 |
| | 26-08-2023 | 17-EE-00-109 | Exchanger | Flange | 3 | Outlet | 70.1 | 0.00220 |
| 3 | 26-08-2023 | 17-EE-00-131 A | Exchanger | Flange | 4 | Inlet | 23.5 | 0.00102 |
| | 26-08-2023 | 17-EE-00-131 A | Exchanger | Flange | 6 | Outlet | 16.4 | 0.00079 |
| 4 | 26-08-2023 | 17-EE-00-131 B | Exchanger | Flange | 4 | Inlet | 50.2 | 0.00174 |
| | 26-08-2023 | 17-EE-00-131 B | Exchanger | Flange | 6 | Outlet | 122.5 | 0.00325 |
| 5 | 26-08-2023 | 17-EE-00-152 A | Exchanger | Flange | 4 | Inlet | 63.9 | 0.00206 |
| | 26-08-2023 | 17-EE-00-152 A | Exchanger | Flange | 6 | Outlet | 80.4 | 0.00242 |
| 6 | 26-08-2023 | 17-EE-00-152 B | Exchanger | Flange | 4 | Inlet | 26.5 | 0.00111 |
| | 26-08-2023 | 17-EE-00-152 B | Exchanger | Flange | 6 | Outlet | 62.1 | 0.00202 |
| 7 | 26-08-2023 | 17-EE-00-106 A | Exchanger | Flange | 2 | Inlet | 23.6 | 0.00102 |
| | 26-08-2023 | 17-EE-00-106 A | Exchanger | Flange | 3 | Outlet | 80.4 | 0.00242 |
| 8 | 26-08-2023 | 17-EE-00-106 B | Exchanger | Flange | 2 | Inlet | 23.6 | 0.00102 |
| | 26-08-2023 | 17-EE-00-106 B | Exchanger | Flange | 3 | Outlet | 156.8 | 0.00387 |
| 9 | 26-08-2023 | 17-EE-00-101 A | Exchanger | Flange | 8 | Inlet | 93.1 | 0.00268 |
| | 26-08-2023 | 17-EE-00-101 A | Exchanger | Flange | 10 | Outlet | 26.5 | 0.00111 |
| 10 | 26-08-2023 | 17-EE-00-101 B | Exchanger | Flange | 8 | Inlet | 30.6 | 0.00123 |
| | 26-08-2023 | 17-EE-00-101 B | Exchanger | Flange | 10 | Outlet | 13.4 | 0.00069 |
| 11 | 26-08-2023 | 17-EE-00-101 C | Exchanger | Flange | 8 | Inlet | 52.6 | 0.00179 |
| | 26-08-2023 | 17-EE-00-101 C | Exchanger | Flange | 10 | Outlet | 13.2 | 0.00068 |
| 12 | 26-08-2023 | 17-EE-00-101 D | Exchanger | Flange | 8 | Inlet | 50.2 | 0.00174 |
| | 26-08-2023 | 17-EE-00-101 D | Exchanger | Flange | 10 | Outlet | 16.5 | 0.00079 |
| 13 | 26-08-2023 | 17-EE-00-107 A | Exchanger | Flange | 3 | Inlet | 156.2 | 0.00386 |
| | 26-08-2023 | 17-EE-00-107 A | Exchanger | Flange | 3 | Outlet | 36.5 | 0.00139 |
| 14 | 26-08-2023 | 17-EE-00-107 B | Exchanger | Flange | 3 | Inlet | 50.4 | 0.00174 |
| | 26-08-2023 | 17-EE-00-107 B | Exchanger | Flange | 3 | Outlet | 13.5 | 0.00069 |
| 15 | 26-08-2023 | 17-EE-00-103 A | Exchanger | Flange | 4 | Inlet | 22.6 | 0.00099 |
| | 26-08-2023 | 17-EE-00-103 A | Exchanger | Flange | 6 | Outlet | 3.6 | 0.00027 |
| 16 | 26-08-2023 | 17-EE-00-103 B | Exchanger | Flange | 4 | Inlet | 50.1 | 0.00173 |
| | 26-08-2023 | 17-EE-00-103 B | Exchanger | Flange | 6 | Outlet | 23.5 | 0.00102 |
| **Total VOC Emission from Exchanger** | | | | | | | | **0.05147** |

**Total VOC Emission from KHDS in Quarter July 2023 to September 2023 is 0.49466 kg/day**

# Bharat Petroleum Corporation Limited
# (Bina Refinery)

Bina, Dist. Sagar – 470124, M.P.

## NOISE MONITORING SURVEY REPORT

(Inside Green Belt Area)

July 2023 To September 2023

Prepared by:

**Mahabal Enviro Engineers Pvt. Ltd.**

Plot Nos. 13,14,17,18, Grampanchayat Bokhara, 8 km from Nagpur City,
Opp. Patel Petrol Pump, Chhindwara Road, Koradi, Dist.Nagpur-441111

**Phone :** 91-712-2612162 **T/Fax:** 91-712-2612212 **Email:** nagpur@mahabal.com

# Mahabal Enviro Engineers Pvt. Ltd.

Engineers, Consultants, Environmental Monitoring Laboratory & Contractors
Plot Nos. 13,14,17,18, Grampanchayat Bokhara, 8 km from Nagpur City,
Opp. Patel Petrol Pump, Chhindwara Road, Koradi, Dist.Nagpur-441111
**Phone :** 91-712-2612162 **T/Fax:** 91-712-2612212 **Email:** nagpur@mahabal.com


Ref.: MEE/BPCL-N-IGB/2023-24/02

Date: 19th October, 2023

To,
**Bharat Petroleum Corporation Ltd.**
Bina,
Dist.: Sagar – 470124,
Madhya Pradesh

Kind Attn.: Mr. Anil Medhe (DGM - Environment)
Phone: 07580 22 6811
Email: medheat@bharatpetroleum.in

**Subject:** **Noise Monitoring Survey Report for 'Inside Green Belt Area' for the Quarter July 2023 to September 2023**

**Reference:** **Your Work Order No. 4509155006 dated 19.09.2022**

Dear Sir,

We are submitting the **Noise Monitoring Report for 'Inside Green Belt Area'** of the survey carried by us at your Bina Refinery works for the quarter under reference.

We hope that you will find the same in order.

Thanking you and assuring you of our best and prompt services at all times.

Yours faithfully,
**FOR MAHABAL ENVIRO ENGINEERS PVT. LTD.**

**Vivek Karippara**
**AUTHORIZED SIGNATORY**

☑ Enclosure: Report as above, 3 copies.



**Plot No. F-7, Road No. 21, MIDC Wagle Estate, Thane West - 400604, Maharashtra**
(600 m from Hotel Rukhmini Palace Turn Opp Toyota Show Room. Next to Ashida Electrical - near J B Sawant Bus Stop)
**Phone: 2582 0658/ 3139/ 1663/ 3154 Fax: 91-22-25823543 thane@mahabal.com**

# BHARAT PETROLEUM CORPORATION LIMITED, BINA-M.P.
## NOISE MONITORING SUMMARY REPORT INSIDE GREEN BELT AREA
## July 2023 TO September 2023

| Monitoring Location | Tower No.1 | Tower No.3 | Tower No.5 | Tower No.7 |
|---|---|---|---|---|
| Time/Date | 21-08-2023 | 23-08-2023 | 25-08-2023 | 28-08-2023 |
| 0:00 am-1:00 am | 56.3 | 50.9 | 52.0 | 57.3 |
| 1:00 am-2:00 am | 57.3 | 50.7 | 52.2 | 57.3 |
| 2:00 am-3:00 am | 56.1 | 50.3 | 52.9 | 57.0 |
| 3:00am -4:00 am | 57.5 | 50.1 | 52.3 | 57.5 |
| 4:00 am-5:00 am | 57.5 | 50.2 | 51.2 | 58.4 |
| 5:00 am-6:00 am | 56.9 | 51.9 | 51.4 | 57.5 |
| 6:00 am-7:00 am | 58.2 | 52.8 | 52.6 | 60.7 |
| 7:00 am-8:00 am | 61.5 | 52.9 | 54.3 | 61.5 |
| 8:00 am-9:00 am | 61.0 | 53.6 | 53.2 | 58.2 |
| 9:00 am-10:00 am | 62.0 | 53.7 | 55.2 | 62.1 |
| 10:00 am -11:00 am | 60.8 | 54.0 | 55.8 | 60.9 |
| 11:00 am-12:00 pm | 60.9 | 53.3 | 54.4 | 61.0 |
| 12:00 pm-13:00 pm | 61.2 | 53.1 | 56.5 | 58.3 |
| 13:00 pm-14:00 pm | 58.2 | 53.2 | 56.2 | 58.2 |
| 14:00 pm-:15:00 pm | 63.3 | 53.3 | 53.0 | 57.9 |
| 15:00 pm-16:00 pm | 57.9 | 53.2 | 57.5 | 58.0 |
| 16:00 pm-17:00 pm | 57.5 | 52.6 | 56.8 | 57.5 |
| 17:00 pm-18:00 pm | 60.6 | 52.7 | 52.4 | 60.7 |
| 18:00 pm-19:00 pm | 57.3 | 53.9 | 52.9 | 57.3 |
| 19:00 pm-20:00 pm | 57.2 | 53.5 | 53.3 | 57.2 |
| 20:00 pm-21:00 pm | 61.0 | 53.7 | 53.2 | 61.1 |
| 21:00pm-22:00 pm | 59.6 | 53.3 | 53.3 | 57.2 |
| 22:00 pm-23:00 pm | 57.5 | 51.8 | 53.3 | 57.5 |
| 23:00 pm- 0:00 am | 57.2 | 52.1 | 53.1 | 57.4 |
| | | | | |
| $L_{max}$ | **64.1** | **58.7** | **58.1** | **64.9** |
| $L_{min}$ | **52.2** | **47.5** | **47.6** | **53.1** |
| $L_{pk}$ | **68.9** | **63.1** | **62.3** | **69.5** |
| **Leq.** $_{Day}$ | **60.3** | **53.3** | **54.7** | **59.6** |
| **Leq.** $_{Night}$ | **57.0** | **51.1** | **52.4** | **57.5** |
| **Leq.** $_{(Day/Night)}$ | **59.4** | **52.7** | **54.1** | **59.0** |

**Note:** 1) All readings are reported in dB A

2) Standard limit as per Noise Pollution (Regulation & Control) Rules, 2000 [Rules 3 (1) and 4(1)] :

- **Day Time (6 am to 10 pm) : 75 dB A**
- **Night Time (10 pm to 6 am) : 70 dB A**

# BHARAT PETROLEUM CORPORATION LIMITED, BINA-M.P.

## NOISE MONITORING REPORT INSIDE GREEN BELT AREA

**Location-Tower No.1 Date-21/08/2023 July 2023 TO September 2023**

| NOISE MONITORING FOR DAY TIME (06:00 AM to 10:00 PM) | | | | | | | | | | | |
|---|---|---|---|---|---|---|---|---|---|---|---|
| Record No. | Time hh:mm | Range dB | Reading dB A | Record No. | Time hh:mm | Range dB | Reading dB A | Record No. | Time hh:mm | Range dB | Reading dB A |
| 1 | 6:01 | 30-130 | 60.1 | 50 | 6:50 | 30-130 | 56.8 | 99 | 7:39 | 30-130 | 60.7 |
| 2 | 6:02 | 30-130 | 61.3 | 51 | 6:51 | 30-130 | 56.3 | 100 | 7:40 | 30-130 | 60.9 |
| 3 | 6:03 | 30-130 | 63.2 | 52 | 6:52 | 30-130 | 57.6 | 101 | 7:41 | 30-130 | 61.8 |
| 4 | 6:04 | 30-130 | 63.3 | 53 | 6:53 | 30-130 | 56.8 | 102 | 7:42 | 30-130 | 60.9 |
| 5 | 6:05 | 30-130 | 62.8 | 54 | 6:54 | 30-130 | 56.7 | 103 | 7:43 | 30-130 | 61.4 |
| 6 | 6:06 | 30-130 | 61.6 | 55 | 6:55 | 30-130 | 58.6 | 104 | 7:44 | 30-130 | 60.3 |
| 7 | 6:07 | 30-130 | 62.7 | 56 | 6:56 | 30-130 | 57.4 | 105 | 7:45 | 30-130 | 62.4 |
| 8 | 6:08 | 30-130 | 57.1 | 57 | 6:57 | 30-130 | 56.6 | 106 | 7:46 | 30-130 | 60.3 |
| 9 | 6:09 | 30-130 | 56.9 | 58 | 6:58 | 30-130 | 55.4 | 107 | 7:47 | 30-130 | 61.2 |
| 10 | 6:10 | 30-130 | 57.3 | 59 | 6:59 | 30-130 | 57.6 | 108 | 7:48 | 30-130 | 62.3 |
| 11 | 6:11 | 30-130 | 58.2 | 60 | 7:00 | 30-130 | 56.6 | 109 | 7:49 | 30-130 | 61.9 |
| 12 | 6:12 | 30-130 | 57.3 | 61 | 7:01 | 30-130 | 62.0 | 110 | 7:50 | 30-130 | 63.8 |
| 13 | 6:13 | 30-130 | 58.1 | 62 | 7:02 | 30-130 | 60.4 | 111 | 7:51 | 30-130 | 61.6 |
| 14 | 6:14 | 30-130 | 57.3 | 63 | 7:03 | 30-130 | 62.8 | 112 | 7:52 | 30-130 | 60.4 |
| 15 | 6:15 | 30-130 | 56.2 | 64 | 7:04 | 30-130 | 60.9 | 113 | 7:53 | 30-130 | 61.9 |
| 16 | 6:16 | 30-130 | 57.6 | 65 | 7:05 | 30-130 | 62.7 | 114 | 7:54 | 30-130 | 62.0 |
| 17 | 6:17 | 30-130 | 57.4 | 66 | 7:06 | 30-130 | 63.8 | 115 | 7:55 | 30-130 | 62.6 |
| 18 | 6:18 | 30-130 | 56.6 | 67 | 7:07 | 30-130 | 62.7 | 116 | 7:56 | 30-130 | 60.0 |
| 19 | 6:19 | 30-130 | 57.4 | 68 | 7:08 | 30-130 | 59.0 | 117 | 7:57 | 30-130 | 60.6 |
| 20 | 6:20 | 30-130 | 55.3 | 69 | 7:09 | 30-130 | 60.3 | 118 | 7:58 | 30-130 | 59.4 |
| 21 | 6:21 | 30-130 | 58.9 | 70 | 7:10 | 30-130 | 60.9 | 119 | 7:59 | 30-130 | 62.6 |
| 22 | 6:22 | 30-130 | 57.0 | 71 | 7:11 | 30-130 | 61.4 | 120 | 8:00 | 30-130 | 60.5 |
| 23 | 6:23 | 30-130 | 56.1 | 72 | 7:12 | 30-130 | 62.8 | 121 | 8:01 | 30-130 | 62.0 |
| 24 | 6:24 | 30-130 | 56.2 | 73 | 7:13 | 30-130 | 60.9 | 122 | 8:02 | 30-130 | 60.4 |
| 25 | 6:25 | 30-130 | 57.5 | 74 | 7:14 | 30-130 | 60.7 | 123 | 8:03 | 30-130 | 62.8 |
| 26 | 6:26 | 30-130 | 56.8 | 75 | 7:15 | 30-130 | 60.3 | 124 | 8:04 | 30-130 | 60.9 |
| 27 | 6:27 | 30-130 | 57.3 | 76 | 7:16 | 30-130 | 61.3 | 125 | 8:05 | 30-130 | 62.7 |
| 28 | 6:28 | 30-130 | 56.6 | 77 | 7:17 | 30-130 | 62.1 | 126 | 8:06 | 30-130 | 63.8 |
| 29 | 6:29 | 30-130 | 57.6 | 78 | 7:18 | 30-130 | 60.6 | 127 | 8:07 | 30-130 | 62.7 |
| 30 | 6:30 | 30-130 | 57.0 | 79 | 7:19 | 30-130 | 60.4 | 128 | 8:08 | 30-130 | 59.0 |
| 31 | 6:31 | 30-130 | 58.0 | 80 | 7:20 | 30-130 | 61.6 | 129 | 8:09 | 30-130 | 60.3 |
| 32 | 6:32 | 30-130 | 56.7 | 81 | 7:21 | 30-130 | 60.7 | 130 | 8:10 | 30-130 | 60.9 |
| 33 | 6:33 | 30-130 | 57.3 | 82 | 7:22 | 30-130 | 60.9 | 131 | 8:11 | 30-130 | 61.4 |
| 34 | 6:34 | 30-130 | 58.9 | 83 | 7:23 | 30-130 | 61.8 | 132 | 8:12 | 30-130 | 62.8 |
| 35 | 6:35 | 30-130 | 57.9 | 84 | 7:24 | 30-130 | 60.4 | 133 | 8:13 | 30-130 | 60.9 |
| 36 | 6:36 | 30-130 | 56.5 | 85 | 7:25 | 30-130 | 60.1 | 134 | 8:14 | 30-130 | 60.7 |
| 37 | 6:37 | 30-130 | 57.3 | 86 | 7:26 | 30-130 | 61.2 | 135 | 8:15 | 30-130 | 60.8 |
| 38 | 6:38 | 30-130 | 56.8 | 87 | 7:27 | 30-130 | 61.9 | 136 | 8:16 | 30-130 | 61.9 |
| 39 | 6:39 | 30-130 | 57.5 | 88 | 7:28 | 30-130 | 60.4 | 137 | 8:17 | 30-130 | 61.8 |
| 40 | 6:40 | 30-130 | 56.6 | 89 | 7:29 | 30-130 | 63.8 | 138 | 8:18 | 30-130 | 62.6 |
| 41 | 6:41 | 30-130 | 56.3 | 90 | 7:30 | 30-130 | 62.1 | 139 | 8:19 | 30-130 | 61.8 |
| 42 | 6:42 | 30-130 | 57.5 | 91 | 7:31 | 30-130 | 61.9 | 140 | 8:20 | 30-130 | 61.6 |
| 43 | 6:43 | 30-130 | 56.3 | 92 | 7:32 | 30-130 | 60.3 | 141 | 8:21 | 30-130 | 60.8 |
| 44 | 6:44 | 30-130 | 57.4 | 93 | 7:33 | 30-130 | 60.9 | 142 | 8:22 | 30-130 | 61.7 |
| 45 | 6:45 | 30-130 | 56.0 | 94 | 7:34 | 30-130 | 61.3 | 143 | 8:23 | 30-130 | 60.9 |
| 46 | 6:46 | 30-130 | 57.9 | 95 | 7:35 | 30-130 | 62.1 | 144 | 8:24 | 30-130 | 59.4 |
| 47 | 6:47 | 30-130 | 58.9 | 96 | 7:36 | 30-130 | 60.6 | 145 | 8:25 | 30-130 | 59.1 |
| 48 | 6:48 | 30-130 | 58.5 | 97 | 7:37 | 30-130 | 62.4 | 146 | 8:26 | 30-130 | 59.2 |
| 49 | 6:49 | 30-130 | 57.5 | 98 | 7:38 | 30-130 | 61.6 | 147 | 8:27 | 30-130 | 59.9 |

# BHARAT PETROLEUM CORPORATION LIMITED, BINA-M.P.

## NOISE MONITORING REPORT INSIDE GREEN BELT AREA

## Location-Tower No.1 Date-21/08/2023 July 2023 TO September 2023

| NOISE MONITORING FOR DAY TIME (06:00 AM to 10:00 PM) | | | | | | | | | | | |
|---|---|---|---|---|---|---|---|---|---|---|---|
| Record No. | Time hh:mm | Range dB | Reading dB A | Record No. | Time hh:mm | Range dB | Reading dB A | Record No. | Time hh:mm | Range dB | Reading dB A |
| 148 | 8:28 | 30-130 | 59.4 | 197 | 9:17 | 30-130 | 61.8 | 246 | 10:06 | 30-130 | 61.4 |
| 149 | 8:29 | 30-130 | 59.8 | 198 | 9:18 | 30-130 | 62.6 | 247 | 10:07 | 30-130 | 59.3 |
| 150 | 8:30 | 30-130 | 61.1 | 199 | 9:19 | 30-130 | 61.8 | 248 | 10:08 | 30-130 | 59.9 |
| 151 | 8:31 | 30-130 | 59.9 | 200 | 9:20 | 30-130 | 61.6 | 249 | 10:09 | 30-130 | 62.0 |
| 152 | 8:32 | 30-130 | 59.3 | 201 | 9:21 | 30-130 | 60.8 | 250 | 10:10 | 30-130 | 61.1 |
| 153 | 8:33 | 30-130 | 61.1 | 202 | 9:22 | 30-130 | 61.7 | 251 | 10:11 | 30-130 | 60.3 |
| 154 | 8:34 | 30-130 | 62.8 | 203 | 9:23 | 30-130 | 60.9 | 252 | 10:12 | 30-130 | 60.7 |
| 155 | 8:35 | 30-130 | 59.3 | 204 | 9:24 | 30-130 | 63.4 | 253 | 10:13 | 30-130 | 59.8 |
| 156 | 8:36 | 30-130 | 59.5 | 205 | 9:25 | 30-130 | 63.1 | 254 | 10:14 | 30-130 | 59.3 |
| 157 | 8:37 | 30-130 | 59.9 | 206 | 9:26 | 30-130 | 61.2 | 255 | 10:15 | 30-130 | 60.6 |
| 158 | 8:38 | 30-130 | 60.7 | 207 | 9:27 | 30-130 | 62.9 | 256 | 10:16 | 30-130 | 61.6 |
| 159 | 8:39 | 30-130 | 59.3 | 208 | 9:28 | 30-130 | 63.4 | 257 | 10:17 | 30-130 | 60.0 |
| 160 | 8:40 | 30-130 | 58.4 | 209 | 9:29 | 30-130 | 62.8 | 258 | 10:18 | 30-130 | 62.0 |
| 161 | 8:41 | 30-130 | 60.7 | 210 | 9:30 | 30-130 | 61.1 | 259 | 10:19 | 30-130 | 60.7 |
| 162 | 8:42 | 30-130 | 60.9 | 211 | 9:31 | 30-130 | 62.9 | 260 | 10:20 | 30-130 | 61.3 |
| 163 | 8:43 | 30-130 | 61.4 | 212 | 9:32 | 30-130 | 62.3 | 261 | 10:21 | 30-130 | 60.9 |
| 164 | 8:44 | 30-130 | 59.3 | 213 | 9:33 | 30-130 | 61.1 | 262 | 10:22 | 30-130 | 59.9 |
| 165 | 8:45 | 30-130 | 59.4 | 214 | 9:34 | 30-130 | 62.8 | 263 | 10:23 | 30-130 | 59.5 |
| 166 | 8:46 | 30-130 | 60.3 | 215 | 9:35 | 30-130 | 61.3 | 264 | 10:24 | 30-130 | 59.3 |
| 167 | 8:47 | 30-130 | 61.2 | 216 | 3:36 | 30-130 | 62.5 | 265 | 10:25 | 30-130 | 62.8 |
| 168 | 8:48 | 30-130 | 62.3 | 217 | 9:37 | 30-130 | 61.9 | 266 | 10:26 | 30-130 | 61.5 |
| 169 | 8:49 | 30-130 | 61.9 | 218 | 9:38 | 30-130 | 60.7 | 267 | 10:27 | 30-130 | 59.6 |
| 170 | 8:50 | 30-130 | 62.8 | 219 | 9:39 | 30-130 | 59.3 | 268 | 10:28 | 30-130 | 60.3 |
| 171 | 8:51 | 30-130 | 61.6 | 220 | 9:40 | 30-130 | 63.4 | 269 | 10:29 | 30-130 | 59.5 |
| 172 | 8:52 | 30-130 | 60.4 | 221 | 9:41 | 30-130 | 60.7 | 270 | 10:30 | 30-130 | 58.3 |
| 173 | 8:53 | 30-130 | 61.9 | 222 | 9:42 | 30-130 | 60.9 | 271 | 10:31 | 30-130 | 60.4 |
| 174 | 8:54 | 30-130 | 60.0 | 223 | 9:43 | 30-130 | 61.4 | 272 | 10:32 | 30-130 | 59.0 |
| 175 | 8:55 | 30-130 | 61.6 | 224 | 9:44 | 30-130 | 61.3 | 273 | 10:33 | 30-130 | 60.9 |
| 176 | 8:56 | 30-130 | 60.0 | 225 | 9:45 | 30-130 | 62.4 | 274 | 10:34 | 30-130 | 61.9 |
| 177 | 8:57 | 30-130 | 62.6 | 226 | 9:46 | 30-130 | 60.3 | 275 | 10:35 | 30-130 | 60.5 |
| 178 | 8:58 | 30-130 | 62.4 | 227 | 9:47 | 30-130 | 61.2 | 276 | 10:36 | 30-130 | 61.6 |
| 179 | 8:59 | 30-130 | 58.6 | 228 | 9:48 | 30-130 | 62.3 | 277 | 10:37 | 30-130 | 59.2 |
| 180 | 9:00 | 30-130 | 57.5 | 229 | 9:49 | 30-130 | 61.9 | 278 | 10:38 | 30-130 | 58.6 |
| 181 | 9:01 | 30-130 | 62.0 | 230 | 9:50 | 30-130 | 62.8 | 279 | 10:39 | 30-130 | 59.1 |
| 182 | 9:02 | 30-130 | 60.4 | 231 | 9:51 | 30-130 | 61.6 | 280 | 10:40 | 30-130 | 59.8 |
| 183 | 9:03 | 30-130 | 62.8 | 232 | 9:52 | 30-130 | 63.2 | 281 | 10:41 | 30-130 | 59.5 |
| 184 | 9:04 | 30-130 | 60.9 | 233 | 9:53 | 30-130 | 61.9 | 282 | 10:42 | 30-130 | 61.7 |
| 185 | 9:05 | 30-130 | 62.7 | 234 | 9:54 | 30-130 | 62.0 | 283 | 10:43 | 30-130 | 62.5 |
| 186 | 9:06 | 30-130 | 63.8 | 235 | 9:55 | 30-130 | 61.6 | 284 | 10:44 | 30-130 | 62.7 |
| 187 | 9:07 | 30-130 | 62.7 | 236 | 9:56 | 30-130 | 62.0 | 285 | 10:45 | 30-130 | 62.7 |
| 188 | 9:08 | 30-130 | 63.0 | 237 | 9:57 | 30-130 | 62.6 | 286 | 10:46 | 30-130 | 59.1 |
| 189 | 9:09 | 30-130 | 60.3 | 238 | 9:58 | 30-130 | 62.4 | 287 | 10:47 | 30-130 | 59.4 |
| 190 | 9:10 | 30-130 | 60.9 | 239 | 9:59 | 30-130 | 63.6 | 288 | 10:48 | 30-130 | 58.6 |
| 191 | 9:11 | 30-130 | 61.4 | 240 | 10:00 | 30-130 | 63.5 | 289 | 10:49 | 30-130 | 59.2 |
| 192 | 9:12 | 30-130 | 62.8 | 241 | 10:01 | 30-130 | 61.3 | 290 | 10:50 | 30-130 | 60.3 |
| 193 | 9:13 | 30-130 | 60.9 | 242 | 10:02 | 30-130 | 62.2 | 291 | 10:51 | 30-130 | 61.2 |
| 194 | 9:14 | 30-130 | 60.7 | 243 | 10:03 | 30-130 | 63.6 | 292 | 10:52 | 30-130 | 60.3 |
| 195 | 9:15 | 30-130 | 60.8 | 244 | 10:04 | 30-130 | 62.4 | 293 | 10:53 | 30-130 | 61.3 |
| 196 | 9:16 | 30-130 | 61.9 | 245 | 10:05 | 30-130 | 61.6 | 294 | 10:54 | 30-130 | 62.1 |

# BHARAT PETROLEUM CORPORATION LIMITED, BINA-M.P.

## NOISE MONITORING REPORT INSIDE GREEN BELT AREA

**Location-Tower No.1 Date-21/08/2023 July 2023 TO September 2023**

| NOISE MONITORING FOR DAY TIME (06:00 AM to 10:00 PM) | | | | | | | | | | | |
|---|---|---|---|---|---|---|---|---|---|---|---|
| Record No. | Time hh:mm | Range dB | Reading dB A | Record No. | Time hh:mm | Range dB | Reading dB A | Record No. | Time hh:mm | Range dB | Reading dB A |
| 295 | 10:55 | 30-130 | 60.6 | 344 | 11:44 | 30-130 | 62.7 | 393 | 12:33 | 30-130 | 61.0 |
| 296 | 10:56 | 30-130 | 59.4 | 345 | 11:45 | 30-130 | 62.7 | 394 | 12:34 | 30-130 | 60.9 |
| 297 | 10:57 | 30-130 | 58.6 | 346 | 11:46 | 30-130 | 59.1 | 395 | 12:35 | 30-130 | 61.1 |
| 298 | 10:58 | 30-130 | 60.7 | 347 | 11:47 | 30-130 | 59.4 | 396 | 12:36 | 30-130 | 61.1 |
| 299 | 10:59 | 30-130 | 60.9 | 348 | 11:48 | 30-130 | 59.6 | 397 | 12:37 | 30-130 | 61.4 |
| 300 | 11:00 | 30-130 | 61.8 | 349 | 11:49 | 30-130 | 59.2 | 398 | 12:38 | 30-130 | 61.4 |
| 301 | 11:01 | 30-130 | 61.3 | 350 | 11:50 | 30-130 | 60.3 | 399 | 12:39 | 30-130 | 61.4 |
| 302 | 11:02 | 30-130 | 62.2 | 351 | 11:51 | 30-130 | 61.2 | 400 | 12:40 | 30-130 | 61.4 |
| 303 | 11:03 | 30-130 | 59.6 | 352 | 11:52 | 30-130 | 60.3 | 401 | 12:41 | 30-130 | 60.9 |
| 304 | 11:04 | 30-130 | 59.4 | 353 | 11:53 | 30-130 | 61.3 | 402 | 12:42 | 30-130 | 61.1 |
| 305 | 11:05 | 30-130 | 61.6 | 354 | 11:54 | 30-130 | 62.1 | 403 | 12:43 | 30-130 | 60.8 |
| 306 | 11:06 | 30-130 | 59.4 | 355 | 11:55 | 30-130 | 60.6 | 404 | 12:44 | 30-130 | 61.2 |
| 307 | 11:07 | 30-130 | 59.3 | 356 | 11:56 | 30-130 | 59.4 | 405 | 12:45 | 30-130 | 60.9 |
| 308 | 11:08 | 30-130 | 59.9 | 357 | 11:57 | 30-130 | 62.6 | 406 | 12:46 | 30-130 | 60.9 |
| 309 | 11:09 | 30-130 | 62.0 | 358 | 11:58 | 30-130 | 60.7 | 407 | 12:47 | 30-130 | 61.6 |
| 310 | 11:10 | 30-130 | 61.1 | 359 | 11:59 | 30-130 | 60.9 | 408 | 12:48 | 30-130 | 61.6 |
| 311 | 11:11 | 30-130 | 60.3 | 360 | 12:00 | 30-130 | 61.8 | 409 | 12:49 | 30-130 | 61.5 |
| 312 | 11:12 | 30-130 | 60.7 | 361 | 12:01 | 30-130 | 61.0 | 410 | 12:50 | 30-130 | 61.4 |
| 313 | 11:13 | 30-130 | 59.8 | 362 | 12:02 | 30-130 | 61.0 | 411 | 12:51 | 30-130 | 61.1 |
| 314 | 11:14 | 30-130 | 59.3 | 363 | 12:03 | 30-130 | 60.9 | 412 | 12:52 | 30-130 | 61.4 |
| 315 | 11:15 | 30-130 | 60.6 | 364 | 12:04 | 30-130 | 61.4 | 413 | 12:53 | 30-130 | 61.2 |
| 316 | 11:16 | 30-130 | 61.6 | 365 | 12:05 | 30-130 | 61.2 | 414 | 12:54 | 30-130 | 61.0 |
| 317 | 11:17 | 30-130 | 60.0 | 366 | 12:06 | 30-130 | 61.0 | 415 | 12:55 | 30-130 | 61.0 |
| 318 | 11:18 | 30-130 | 62.0 | 367 | 12:07 | 30-130 | 61.4 | 416 | 12:56 | 30-130 | 61.2 |
| 319 | 11:19 | 30-130 | 60.7 | 368 | 12:08 | 30-130 | 60.8 | 417 | 12:57 | 30-130 | 61.4 |
| 320 | 11:20 | 30-130 | 61.3 | 369 | 12:09 | 30-130 | 61.2 | 418 | 12:58 | 30-130 | 61.3 |
| 321 | 11:21 | 30-130 | 60.9 | 370 | 12:10 | 30-130 | 61.3 | 419 | 12:59 | 30-130 | 61.2 |
| 322 | 11:22 | 30-130 | 61.9 | 371 | 12:11 | 30-130 | 61.6 | 420 | 13:00 | 30-130 | 61.2 |
| 323 | 11:23 | 30-130 | 59.5 | 372 | 12:12 | 30-130 | 61.1 | 421 | 13:01 | 30-130 | 56.6 |
| 324 | 11:24 | 30-130 | 61.3 | 373 | 12:13 | 30-130 | 61.0 | 422 | 13:02 | 30-130 | 57.4 |
| 325 | 11:25 | 30-130 | 62.8 | 374 | 12:14 | 30-130 | 61.0 | 423 | 13:03 | 30-130 | 58.0 |
| 326 | 11:26 | 30-130 | 61.5 | 375 | 12:15 | 30-130 | 61.5 | 424 | 13:04 | 30-130 | 57.2 |
| 327 | 11:27 | 30-130 | 59.6 | 376 | 12:16 | 30-130 | 61.5 | 425 | 13:05 | 30-130 | 56.4 |
| 328 | 11:28 | 30-130 | 60.3 | 377 | 12:17 | 30-130 | 61.2 | 426 | 13:06 | 30-130 | 57.8 |
| 329 | 11:29 | 30-130 | 59.5 | 378 | 12:18 | 30-130 | 61.0 | 427 | 13:07 | 30-130 | 58.9 |
| 330 | 11:30 | 30-130 | 61.3 | 379 | 12:19 | 30-130 | 61.1 | 428 | 13:08 | 30-130 | 59.3 |
| 331 | 11:31 | 30-130 | 60.4 | 380 | 12:20 | 30-130 | 61.4 | 429 | 13:09 | 30-130 | 59.4 |
| 332 | 11:32 | 30-130 | 59.0 | 381 | 12:21 | 30-130 | 61.1 | 430 | 13:10 | 30-130 | 59.3 |
| 333 | 11:33 | 30-130 | 60.9 | 382 | 12:22 | 30-130 | 60.9 | 431 | 13:11 | 30-130 | 57.5 |
| 334 | 11:34 | 30-130 | 61.9 | 383 | 12:23 | 30-130 | 60.8 | 432 | 13:12 | 30-130 | 58.4 |
| 335 | 11:35 | 30-130 | 60.5 | 384 | 12:24 | 30-130 | 61.1 | 433 | 13:13 | 30-130 | 59.1 |
| 336 | 11:36 | 30-130 | 61.6 | 385 | 12:25 | 30-130 | 61.0 | 434 | 13:14 | 30-130 | 56.8 |
| 337 | 11:37 | 30-130 | 59.2 | 386 | 12:26 | 30-130 | 61.4 | 435 | 13:15 | 30-130 | 57.8 |
| 338 | 11:38 | 30-130 | 61.6 | 387 | 12:27 | 30-130 | 61.5 | 436 | 13:16 | 30-130 | 59.0 |
| 339 | 11:39 | 30-130 | 59.1 | 388 | 12:28 | 30-130 | 61.1 | 437 | 13:17 | 30-130 | 60.2 |
| 340 | 11:40 | 30-130 | 59.8 | 389 | 12:29 | 30-130 | 61.1 | 438 | 13:18 | 30-130 | 61.4 |
| 341 | 11:41 | 30-130 | 62.5 | 390 | 12:30 | 30-130 | 60.9 | 439 | 13:19 | 30-130 | 59.3 |
| 342 | 11:42 | 30-130 | 61.7 | 391 | 12:31 | 30-130 | 61.6 | 440 | 13:20 | 30-130 | 60.4 |
| 343 | 11:43 | 30-130 | 62.5 | 392 | 12:32 | 30-130 | 61.2 | 441 | 13:21 | 30-130 | 58.9 |

# BHARAT PETROLEUM CORPORATION LIMITED, BINA-M.P.

## NOISE MONITORING REPORT INSIDE GREEN BELT AREA

**Location-Tower No.1 Date-21/08/2023 July 2023 TO September 2023**

| NOISE MONITORING FOR DAY TIME (06:00 AM to 10:00 PM) | | | | | | | | | | | |
|---|---|---|---|---|---|---|---|---|---|---|---|
| Record No. | Time hh:mm | Range dB | Reading dB A | Record No. | Time hh:mm | Range dB | Reading dB A | Record No. | Time hh:mm | Range dB | Reading dB A |
| 442 | 13:22 | 30-130 | 58.4 | 491 | 14:11 | 30-130 | 64.1 | 540 | 15:00 | 30-130 | 62.6 |
| 443 | 13:23 | 30-130 | 59.4 | 492 | 14:12 | 30-130 | 62.5 | 541 | 15:01 | 30-130 | 63.3 |
| 444 | 13:24 | 30-130 | 58.7 | 493 | 14:13 | 30-130 | 63.9 | 542 | 15:02 | 30-130 | 62.8 |
| 445 | 13:25 | 30-130 | 57.8 | 494 | 14:14 | 30-130 | 64.0 | 543 | 15:03 | 30-130 | 61.6 |
| 446 | 13:26 | 30-130 | 59.4 | 495 | 14:15 | 30-130 | 62.7 | 544 | 15:04 | 30-130 | 62.7 |
| 447 | 13:27 | 30-130 | 56.7 | 496 | 14:16 | 30-130 | 63.7 | 545 | 15:05 | 30-130 | 57.1 |
| 448 | 13:28 | 30-130 | 58.4 | 497 | 14:17 | 30-130 | 63.4 | 546 | 15:06 | 30-130 | 56.9 |
| 449 | 13:29 | 30-130 | 58.6 | 498 | 14:18 | 30-130 | 62.9 | 547 | 15:07 | 30-130 | 57.3 |
| 450 | 13:30 | 30-130 | 56.8 | 499 | 14:19 | 30-130 | 64.0 | 548 | 15:08 | 30-130 | 58.2 |
| 451 | 13:31 | 30-130 | 57.4 | 500 | 14:20 | 30-130 | 63.5 | 549 | 15:09 | 30-130 | 57.3 |
| 452 | 13:32 | 30-130 | 57.8 | 501 | 14:21 | 30-130 | 62.9 | 550 | 15:10 | 30-130 | 58.1 |
| 453 | 13:33 | 30-130 | 56.8 | 502 | 14:22 | 30-130 | 63.7 | 551 | 15:11 | 30-130 | 57.3 |
| 454 | 13:34 | 30-130 | 59.4 | 503 | 14:23 | 30-130 | 63.0 | 552 | 15:12 | 30-130 | 56.2 |
| 455 | 13:35 | 30-130 | 56.4 | 504 | 14:24 | 30-130 | 63.1 | 553 | 15:13 | 30-130 | 57.6 |
| 456 | 13:36 | 30-130 | 57.4 | 505 | 14:25 | 30-130 | 62.9 | 554 | 15:14 | 30-130 | 57.4 |
| 457 | 13:37 | 30-130 | 58.6 | 506 | 14:26 | 30-130 | 64.0 | 555 | 15:15 | 30-130 | 56.6 |
| 458 | 13:38 | 30-130 | 59.4 | 507 | 14:27 | 30-130 | 63.6 | 556 | 15:16 | 30-130 | 57.4 |
| 459 | 13:39 | 30-130 | 56.8 | 508 | 14:28 | 30-130 | 62.8 | 557 | 15:17 | 30-130 | 55.3 |
| 460 | 13:40 | 30-130 | 56.9 | 509 | 14:29 | 30-130 | 63.6 | 558 | 15:18 | 30-130 | 58.9 |
| 461 | 13:41 | 30-130 | 57.3 | 510 | 14:30 | 30-130 | 63.6 | 559 | 15:19 | 30-130 | 57.0 |
| 462 | 13:42 | 30-130 | 57.8 | 511 | 14:31 | 30-130 | 63.4 | 560 | 15:20 | 30-130 | 56.1 |
| 463 | 13:43 | 30-130 | 59.4 | 512 | 14:32 | 30-130 | 63.4 | 561 | 15:21 | 30-130 | 56.2 |
| 464 | 13:44 | 30-130 | 59.5 | 513 | 14:33 | 30-130 | 63.5 | 562 | 15:22 | 30-130 | 57.5 |
| 465 | 13:45 | 30-130 | 56.7 | 514 | 14:34 | 30-130 | 62.5 | 563 | 15:23 | 30-130 | 56.8 |
| 466 | 13:46 | 30-130 | 57.8 | 515 | 14:35 | 30-130 | 63.8 | 564 | 15:24 | 30-130 | 57.3 |
| 467 | 13:47 | 30-130 | 58.6 | 516 | 14:36 | 30-130 | 63.6 | 565 | 15:25 | 30-130 | 56.6 |
| 468 | 13:48 | 30-130 | 56.6 | 517 | 14:37 | 30-130 | 63.0 | 566 | 15:26 | 30-130 | 57.6 |
| 469 | 13:49 | 30-130 | 58.4 | 518 | 14:38 | 30-130 | 63.6 | 567 | 15:27 | 30-130 | 57.0 |
| 470 | 13:50 | 30-130 | 56.6 | 519 | 14:39 | 30-130 | 63.5 | 568 | 15:28 | 30-130 | 58.0 |
| 471 | 13:51 | 30-130 | 57.6 | 520 | 14:40 | 30-130 | 62.6 | 569 | 15:29 | 30-130 | 56.7 |
| 472 | 13:52 | 30-130 | 56.9 | 521 | 14:41 | 30-130 | 63.5 | 570 | 15:30 | 30-130 | 57.3 |
| 473 | 13:53 | 30-130 | 57.6 | 522 | 14:42 | 30-130 | 63.0 | 571 | 15:31 | 30-130 | 58.9 |
| 474 | 13:54 | 30-130 | 56.6 | 523 | 14:43 | 30-130 | 63.5 | 572 | 15:32 | 30-130 | 57.9 |
| 475 | 13:55 | 30-130 | 55.6 | 524 | 14:44 | 30-130 | 63.7 | 573 | 15:33 | 30-130 | 56.5 |
| 476 | 13:56 | 30-130 | 57.6 | 525 | 14:45 | 30-130 | 63.1 | 574 | 15:34 | 30-130 | 57.3 |
| 477 | 13:57 | 30-130 | 56.5 | 526 | 14:46 | 30-130 | 63.6 | 575 | 15:35 | 30-130 | 56.8 |
| 478 | 13:58 | 30-130 | 57.5 | 527 | 14:47 | 30-130 | 63.6 | 576 | 15:36 | 30-130 | 57.5 |
| 479 | 13:59 | 30-130 | 58.6 | 528 | 14:48 | 30-130 | 63.2 | 577 | 15:37 | 30-130 | 56.6 |
| 480 | 14:00 | 30-130 | 57.6 | 529 | 14:49 | 30-130 | 63.6 | 578 | 15:38 | 30-130 | 56.3 |
| 481 | 14:01 | 30-130 | 62.7 | 530 | 14:50 | 30-130 | 62.9 | 579 | 15:39 | 30-130 | 57.5 |
| 482 | 14:02 | 30-130 | 62.5 | 531 | 14:51 | 30-130 | 63.8 | 580 | 15:40 | 30-130 | 56.3 |
| 483 | 14:03 | 30-130 | 62.7 | 532 | 14:52 | 30-130 | 62.6 | 581 | 15:41 | 30-130 | 57.4 |
| 484 | 14:04 | 30-130 | 62.6 | 533 | 14:53 | 30-130 | 62.9 | 582 | 15:42 | 30-130 | 56.0 |
| 485 | 14:05 | 30-130 | 63.5 | 534 | 14:54 | 30-130 | 62.8 | 583 | 15:43 | 30-130 | 57.9 |
| 486 | 14:06 | 30-130 | 63.2 | 535 | 14:55 | 30-130 | 64.0 | 584 | 15:44 | 30-130 | 58.9 |
| 487 | 14:07 | 30-130 | 62.6 | 536 | 14:56 | 30-130 | 63.5 | 585 | 15:45 | 30-130 | 58.5 |
| 488 | 14:08 | 30-130 | 63.8 | 537 | 14:57 | 30-130 | 63.0 | 586 | 15:46 | 30-130 | 57.5 |
| 489 | 14:09 | 30-130 | 62.5 | 538 | 14:58 | 30-130 | 63.1 | 587 | 15:47 | 30-130 | 56.8 |
| 490 | 14:10 | 30-130 | 64.0 | 539 | 14:59 | 30-130 | 63.2 | 588 | 15:48 | 30-130 | 56.3 |

# BHARAT PETROLEUM CORPORATION LIMITED, BINA-M.P.

## NOISE MONITORING REPORT INSIDE GREEN BELT AREA

**Location-Tower No.1 Date-21/08/2023 July 2023 TO September 2023**

| NOISE MONITORING FOR DAY TIME (06:00 AM to 10:00 PM) | | | | | | | | | | | |
|---|---|---|---|---|---|---|---|---|---|---|---|
| Record No. | Time hh:mm | Range dB | Reading dB A | Record No. | Time hh:mm | Range dB | Reading dB A | Record No. | Time hh:mm | Range dB | Reading dB A |
| 589 | 15:49 | 30-130 | 57.6 | 638 | 16:38 | 30-130 | 57.6 | 687 | 17:27 | 30-130 | 59.6 |
| 590 | 15:50 | 30-130 | 56.8 | 639 | 16:39 | 30-130 | 56.5 | 688 | 17:28 | 30-130 | 60.3 |
| 591 | 15:51 | 30-130 | 56.7 | 640 | 16:40 | 30-130 | 57.6 | 689 | 17:29 | 30-130 | 59.5 |
| 592 | 15:52 | 30-130 | 58.6 | 641 | 16:41 | 30-130 | 57.7 | 690 | 17:30 | 30-130 | 58.3 |
| 593 | 15:53 | 30-130 | 57.4 | 642 | 16:42 | 30-130 | 56.6 | 691 | 17:31 | 30-130 | 60.4 |
| 594 | 15:54 | 30-130 | 56.6 | 643 | 16:43 | 30-130 | 58.5 | 692 | 17:32 | 30-130 | 59.0 |
| 595 | 15:55 | 30-130 | 55.4 | 644 | 16:44 | 30-130 | 56.2 | 693 | 17:33 | 30-130 | 60.9 |
| 596 | 15:56 | 30-130 | 57.6 | 645 | 16:45 | 30-130 | 57.5 | 694 | 17:34 | 30-130 | 61.9 |
| 597 | 15:57 | 30-130 | 56.6 | 646 | 16:46 | 30-130 | 57.6 | 695 | 17:35 | 30-130 | 60.5 |
| 598 | 15:58 | 30-130 | 57.3 | 647 | 16:47 | 30-130 | 56.6 | 696 | 17:36 | 30-130 | 61.6 |
| 599 | 15:59 | 30-130 | 56.8 | 648 | 16:48 | 30-130 | 57.9 | 697 | 17:37 | 30-130 | 59.2 |
| 600 | 16:00 | 30-130 | 57.3 | 649 | 16:49 | 30-130 | 58.5 | 698 | 17:38 | 30-130 | 58.6 |
| 601 | 16:01 | 30-130 | 56.2 | 650 | 16:50 | 30-130 | 56.3 | 699 | 17:39 | 30-130 | 59.1 |
| 602 | 16:02 | 30-130 | 57.3 | 651 | 16:51 | 30-130 | 57.2 | 700 | 17:40 | 30-130 | 59.8 |
| 603 | 16:03 | 30-130 | 56.1 | 652 | 16:52 | 30-130 | 57.2 | 701 | 17:41 | 30-130 | 59.5 |
| 604 | 16:04 | 30-130 | 57.3 | 653 | 16:53 | 30-130 | 56.5 | 702 | 17:42 | 30-130 | 61.7 |
| 605 | 16:05 | 30-130 | 56.2 | 654 | 16:54 | 30-130 | 58.2 | 703 | 17:43 | 30-130 | 62.5 |
| 606 | 16:06 | 30-130 | 57.6 | 655 | 16:55 | 30-130 | 59.7 | 704 | 17:44 | 30-130 | 62.7 |
| 607 | 16:07 | 30-130 | 58.4 | 656 | 16:56 | 30-130 | 58.0 | 705 | 17:45 | 30-130 | 62.7 |
| 608 | 16:08 | 30-130 | 57.6 | 657 | 16:57 | 30-130 | 57.1 | 706 | 17:46 | 30-130 | 59.1 |
| 609 | 16:09 | 30-130 | 58.4 | 658 | 16:58 | 30-130 | 57.6 | 707 | 17:47 | 30-130 | 59.4 |
| 610 | 16:10 | 30-130 | 57.9 | 659 | 16:59 | 30-130 | 58.1 | 708 | 17:48 | 30-130 | 58.6 |
| 611 | 16:11 | 30-130 | 56.2 | 660 | 17:00 | 30-130 | 57.4 | 709 | 17:49 | 30-130 | 59.2 |
| 612 | 16:12 | 30-130 | 57.0 | 661 | 17:01 | 30-130 | 61.3 | 710 | 17:50 | 30-130 | 60.3 |
| 613 | 16:13 | 30-130 | 56.8 | 662 | 17:02 | 30-130 | 62.2 | 711 | 17:51 | 30-130 | 61.2 |
| 614 | 16:14 | 30-130 | 57.3 | 663 | 17:03 | 30-130 | 59.6 | 712 | 17:52 | 30-130 | 60.3 |
| 615 | 16:15 | 30-130 | 58.3 | 664 | 17:04 | 30-130 | 59.4 | 713 | 17:53 | 30-130 | 61.3 |
| 616 | 16:16 | 30-130 | 57.4 | 665 | 17:05 | 30-130 | 61.6 | 714 | 17:54 | 30-130 | 62.1 |
| 617 | 16:17 | 30-130 | 56.3 | 666 | 17:06 | 30-130 | 59.4 | 715 | 17:55 | 30-130 | 60.6 |
| 618 | 16:18 | 30-130 | 58.0 | 667 | 17:07 | 30-130 | 59.3 | 716 | 17:56 | 30-130 | 59.4 |
| 619 | 16:19 | 30-130 | 56.6 | 668 | 17:08 | 30-130 | 59.9 | 717 | 17:57 | 30-130 | 58.6 |
| 620 | 16:20 | 30-130 | 57.6 | 669 | 17:09 | 30-130 | 62.0 | 718 | 17:58 | 30-130 | 60.7 |
| 621 | 16:21 | 30-130 | 58.6 | 670 | 17:10 | 30-130 | 61.1 | 719 | 17:59 | 30-130 | 60.9 |
| 622 | 16:22 | 30-130 | 57.2 | 671 | 17:11 | 30-130 | 60.3 | 720 | 18:00 | 30-130 | 61.8 |
| 623 | 16:23 | 30-130 | 56.6 | 672 | 17:12 | 30-130 | 60.7 | 721 | 18:01 | 30-130 | 56.2 |
| 624 | 16:24 | 30-130 | 59.1 | 673 | 17:13 | 30-130 | 59.8 | 722 | 18:02 | 30-130 | 57.3 |
| 625 | 16:25 | 30-130 | 58.4 | 674 | 17:14 | 30-130 | 59.3 | 723 | 18:03 | 30-130 | 58.1 |
| 626 | 16:26 | 30-130 | 56.6 | 675 | 17:15 | 30-130 | 60.6 | 724 | 18:04 | 30-130 | 57.3 |
| 627 | 16:27 | 30-130 | 57.6 | 676 | 17:16 | 30-130 | 61.6 | 725 | 18:05 | 30-130 | 56.2 |
| 628 | 16:28 | 30-130 | 56.2 | 677 | 17:17 | 30-130 | 60.0 | 726 | 18:06 | 30-130 | 57.6 |
| 629 | 16:29 | 30-130 | 57.0 | 678 | 17:18 | 30-130 | 62.0 | 727 | 18:07 | 30-130 | 57.4 |
| 630 | 16:30 | 30-130 | 57.8 | 679 | 17:19 | 30-130 | 60.7 | 728 | 18:08 | 30-130 | 58.6 |
| 631 | 16:31 | 30-130 | 56.2 | 680 | 17:20 | 30-130 | 61.3 | 729 | 18:09 | 30-130 | 57.4 |
| 632 | 16:32 | 30-130 | 57.8 | 681 | 17:21 | 30-130 | 60.9 | 730 | 18:10 | 30-130 | 56.6 |
| 633 | 16:33 | 30-130 | 56.6 | 682 | 17:22 | 30-130 | 59.9 | 731 | 18:11 | 30-130 | 57.6 |
| 634 | 16:34 | 30-130 | 57.9 | 683 | 17:23 | 30-130 | 59.5 | 732 | 18:12 | 30-130 | 56.6 |
| 635 | 16:35 | 30-130 | 58.8 | 684 | 17:24 | 30-130 | 59.3 | 733 | 18:13 | 30-130 | 57.6 |
| 636 | 16:36 | 30-130 | 57.6 | 685 | 17:25 | 30-130 | 62.8 | 734 | 18:14 | 30-130 | 56.4 |
| 637 | 16:37 | 30-130 | 56.0 | 686 | 17:26 | 30-130 | 61.5 | 735 | 18:15 | 30-130 | 57.6 |

# BHARAT PETROLEUM CORPORATION LIMITED, BINA-M.P.

## NOISE MONITORING REPORT INSIDE GREEN BELT AREA

**Location-Tower No.1 Date-21/08/2023 July 2023 TO September 2023**

| NOISE MONITORING FOR DAY TIME (06:00 AM to 10:00 PM) | | | | | | | | | | | |
|---|---|---|---|---|---|---|---|---|---|---|---|
| Record No. | Time hh:mm | Range dB | Reading dB A | Record No. | Time hh:mm | Range dB | Reading dB A | Record No. | Time hh:mm | Range dB | Reading dB A |
| 736 | 18:16 | 30-130 | 58.8 | 785 | 19:05 | 30-130 | 57.6 | 834 | 19:54 | 30-130 | 58.6 |
| 737 | 18:17 | 30-130 | 57.0 | 786 | 19:06 | 30-130 | 56.6 | 835 | 19:55 | 30-130 | 57.5 |
| 738 | 18:18 | 30-130 | 56.6 | 787 | 19:07 | 30-130 | 58.9 | 836 | 19:56 | 30-130 | 58.6 |
| 739 | 18:19 | 30-130 | 57.0 | 788 | 19:08 | 30-130 | 57.3 | 837 | 19:57 | 30-130 | 57.6 |
| 740 | 18:20 | 30-130 | 56.9 | 789 | 19:09 | 30-130 | 57.2 | 838 | 19:58 | 30-130 | 56.0 |
| 741 | 18:21 | 30-130 | 56.7 | 790 | 19:10 | 30-130 | 56.3 | 839 | 19:59 | 30-130 | 56.2 |
| 742 | 18:22 | 30-130 | 57.1 | 791 | 19:11 | 30-130 | 55.1 | 840 | 20:00 | 30-130 | 55.5 |
| 743 | 18:23 | 30-130 | 58.9 | 792 | 19:12 | 30-130 | 56.3 | 841 | 20:01 | 30-130 | 62.0 |
| 744 | 18:24 | 30-130 | 57.2 | 793 | 19:13 | 30-130 | 56.2 | 842 | 20:02 | 30-130 | 60.4 |
| 745 | 18:25 | 30-130 | 57.1 | 794 | 19:14 | 30-130 | 56.6 | 843 | 20:03 | 30-130 | 62.8 |
| 746 | 18:26 | 30-130 | 56.2 | 795 | 19:15 | 30-130 | 58.4 | 844 | 20:04 | 30-130 | 60.9 |
| 747 | 18:27 | 30-130 | 57.6 | 796 | 19:16 | 30-130 | 56.6 | 845 | 20:05 | 30-130 | 62.7 |
| 748 | 18:28 | 30-130 | 57.5 | 797 | 19:17 | 30-130 | 56.4 | 846 | 20:06 | 30-130 | 63.8 |
| 749 | 18:29 | 30-130 | 58.6 | 798 | 19:18 | 30-130 | 57.7 | 847 | 20:07 | 30-130 | 62.7 |
| 750 | 18:30 | 30-130 | 56.6 | 799 | 19:19 | 30-130 | 56.6 | 848 | 20:08 | 30-130 | 59.0 |
| 751 | 18:31 | 30-130 | 58.0 | 800 | 19:20 | 30-130 | 56.6 | 849 | 20:09 | 30-130 | 60.3 |
| 752 | 18:32 | 30-130 | 57.2 | 801 | 19:21 | 30-130 | 58.4 | 850 | 20:10 | 30-130 | 60.9 |
| 753 | 18:33 | 30-130 | 56.5 | 802 | 19:22 | 30-130 | 56.6 | 851 | 20:11 | 30-130 | 61.4 |
| 754 | 18:34 | 30-130 | 57.9 | 803 | 19:23 | 30-130 | 57.6 | 852 | 20:12 | 30-130 | 62.8 |
| 755 | 18:35 | 30-130 | 56.2 | 804 | 19:24 | 30-130 | 56.9 | 853 | 20:13 | 30-130 | 60.9 |
| 756 | 15:36 | 30-130 | 57.5 | 805 | 19:25 | 30-130 | 57.6 | 854 | 20:14 | 30-130 | 60.7 |
| 757 | 18:37 | 30-130 | 58.2 | 806 | 19:26 | 30-130 | 56.6 | 855 | 20:15 | 30-130 | 60.8 |
| 758 | 18:38 | 30-130 | 57.6 | 807 | 19:27 | 30-130 | 55.6 | 856 | 20:16 | 30-130 | 61.9 |
| 759 | 18:39 | 30-130 | 58.6 | 808 | 19:28 | 30-130 | 57.6 | 857 | 20:17 | 30-130 | 61.8 |
| 760 | 18:40 | 30-130 | 57.6 | 809 | 19:29 | 30-130 | 56.5 | 858 | 20:18 | 30-130 | 62.6 |
| 761 | 18:41 | 30-130 | 58.4 | 810 | 19:30 | 30-130 | 57.5 | 859 | 20:19 | 30-130 | 61.8 |
| 762 | 18:42 | 30-130 | 56.6 | 811 | 19:31 | 30-130 | 58.6 | 860 | 20:20 | 30-130 | 61.6 |
| 763 | 18:43 | 30-130 | 56.6 | 812 | 19:32 | 30-130 | 57.6 | 861 | 20:21 | 30-130 | 60.8 |
| 764 | 18:44 | 30-130 | 57.4 | 813 | 19:33 | 30-130 | 57.4 | 862 | 20:22 | 30-130 | 61.7 |
| 765 | 18:45 | 30-130 | 58.6 | 814 | 19:34 | 30-130 | 56.6 | 863 | 20:23 | 30-130 | 60.9 |
| 766 | 18:46 | 30-130 | 55.5 | 815 | 19:35 | 30-130 | 55.6 | 864 | 20:24 | 30-130 | 59.4 |
| 767 | 18:47 | 30-130 | 56.6 | 816 | 19:36 | 30-130 | 58.4 | 865 | 20:25 | 30-130 | 59.1 |
| 768 | 18:48 | 30-130 | 57.3 | 817 | 19:37 | 30-130 | 56.6 | 866 | 20:26 | 30-130 | 59.2 |
| 769 | 18:49 | 30-130 | 57.5 | 818 | 19:38 | 30-130 | 58.5 | 867 | 20:27 | 30-130 | 59.9 |
| 770 | 18:50 | 30-130 | 56.8 | 819 | 19:39 | 30-130 | 56.6 | 868 | 20:28 | 30-130 | 59.4 |
| 771 | 18:51 | 30-130 | 55.0 | 820 | 19:40 | 30-130 | 57.3 | 869 | 20:29 | 30-130 | 59.8 |
| 772 | 18:52 | 30-130 | 55.6 | 821 | 19:41 | 30-130 | 57.5 | 870 | 20:30 | 30-130 | 61.1 |
| 773 | 18:53 | 30-130 | 56.0 | 822 | 19:42 | 30-130 | 58.8 | 871 | 20:31 | 30-130 | 59.9 |
| 774 | 18:54 | 30-130 | 57.6 | 823 | 19:43 | 30-130 | 57.5 | 872 | 20:32 | 30-130 | 59.3 |
| 775 | 18:55 | 30-130 | 56.4 | 824 | 19:44 | 30-130 | 56.6 | 873 | 20:33 | 30-130 | 61.1 |
| 776 | 18:56 | 30-130 | 58.6 | 825 | 19:45 | 30-130 | 57.7 | 874 | 20:34 | 30-130 | 62.8 |
| 777 | 18:57 | 30-130 | 57.5 | 826 | 19:46 | 30-130 | 56.5 | 875 | 20:35 | 30-130 | 59.3 |
| 778 | 18:58 | 30-130 | 56.6 | 827 | 19:47 | 30-130 | 56.6 | 876 | 20:36 | 30-130 | 59.5 |
| 779 | 18:59 | 30-130 | 57.4 | 828 | 19:48 | 30-130 | 57.4 | 877 | 20:37 | 30-130 | 59.9 |
| 780 | 19:00 | 30-130 | 58.0 | 829 | 19:49 | 30-130 | 58.6 | 878 | 20:38 | 30-130 | 60.7 |
| 781 | 19:01 | 30-130 | 57.2 | 830 | 19:50 | 30-130 | 58.4 | 879 | 20:39 | 30-130 | 59.3 |
| 782 | 19:02 | 30-130 | 56.3 | 831 | 19:51 | 30-130 | 57.2 | 880 | 20:40 | 30-130 | 58.4 |
| 783 | 19:03 | 30-130 | 55.2 | 832 | 19:52 | 30-130 | 55.4 | 881 | 20:41 | 30-130 | 60.7 |
| 784 | 19:04 | 30-130 | 56.6 | 833 | 19:53 | 30-130 | 56.6 | 882 | 20:42 | 30-130 | 60.9 |

# BHARAT PETROLEUM CORPORATION LIMITED, BINA-M.P.

## NOISE MONITORING REPORT INSIDE GREEN BELT AREA

**Location-Tower No.1 Date-21/08/2023 July 2023 TO September 2023**

| NOISE MONITORING FOR DAY TIME (06:00 AM to 10:00 PM) | | | | | | | |
|---|---|---|---|---|---|---|---|
| Record No. | Time hh:mm | Range dB | Reading dB A | Record No. | Time hh:mm | Range dB | Reading dB A |
| 883 | 20:43 | 30-130 | 61.4 | 922 | 21:22 | 30-130 | 59.8 |
| 884 | 20:44 | 30-130 | 59.3 | 923 | 21:23 | 30-130 | 59.3 |
| 885 | 20:45 | 30-130 | 59.4 | 924 | 21:24 | 30-130 | 59.5 |
| 886 | 20:46 | 30-130 | 60.3 | 925 | 21:25 | 30-130 | 60.4 |
| 887 | 20:47 | 30-130 | 61.2 | 926 | 21:26 | 30-130 | 59.1 |
| 888 | 20:48 | 30-130 | 62.3 | 927 | 21:27 | 30-130 | 58.9 |
| 889 | 20:49 | 30-130 | 61.9 | 928 | 21:28 | 30-130 | 60.2 |
| 890 | 20:50 | 30-130 | 62.8 | 929 | 21:29 | 30-130 | 59.2 |
| 891 | 20:51 | 30-130 | 61.6 | 930 | 21:30 | 30-130 | 59.9 |
| 892 | 20:52 | 30-130 | 60.4 | 931 | 21:31 | 30-130 | 59.8 |
| 893 | 20:53 | 30-130 | 61.9 | 932 | 21:32 | 30-130 | 59.3 |
| 894 | 20:54 | 30-130 | 60.0 | 933 | 21:33 | 30-130 | 59.8 |
| 895 | 20:55 | 30-130 | 61.6 | 934 | 21:34 | 30-130 | 59.0 |
| 896 | 20:56 | 30-130 | 60.0 | 935 | 21:35 | 30-130 | 60.0 |
| 897 | 20:57 | 30-130 | 62.6 | 936 | 21:36 | 30-130 | 59.5 |
| 898 | 20:58 | 30-130 | 62.4 | 937 | 21:37 | 30-130 | 58.8 |
| 899 | 20:59 | 30-130 | 58.6 | 938 | 21:38 | 30-130 | 60.2 |
| 900 | 21:00 | 30-130 | 57.5 | 939 | 21:39 | 30-130 | 59.1 |
| 901 | 21:01 | 30-130 | 60.3 | 940 | 21:40 | 30-130 | 60.0 |
| 902 | 21:02 | 30-130 | 60.1 | 941 | 21:41 | 30-130 | 58.9 |
| 903 | 21:03 | 30-130 | 59.2 | 942 | 21:42 | 30-130 | 59.1 |
| 904 | 21:04 | 30-130 | 59.2 | 943 | 21:43 | 30-130 | 59.7 |
| 905 | 21:05 | 30-130 | 58.9 | 944 | 21:44 | 30-130 | 59.2 |
| 906 | 21:06 | 30-130 | 59.4 | 945 | 21:45 | 30-130 | 59.2 |
| 907 | 21:07 | 30-130 | 59.9 | 946 | 21:46 | 30-130 | 58.9 |
| 908 | 21:08 | 30-130 | 59.5 | 947 | 21:47 | 30-130 | 60.1 |
| 909 | 21:09 | 30-130 | 60.2 | 948 | 21:48 | 30-130 | 60.2 |
| 910 | 21:10 | 30-130 | 59.6 | 949 | 21:49 | 30-130 | 60.0 |
| 911 | 21:11 | 30-130 | 59.4 | 950 | 21:50 | 30-130 | 59.0 |
| 912 | 21:12 | 30-130 | 60.2 | 951 | 21:51 | 30-130 | 59.8 |
| 913 | 21:13 | 30-130 | 60.1 | 952 | 21:52 | 30-130 | 60.1 |
| 914 | 21:14 | 30-130 | 59.1 | 953 | 21:53 | 30-130 | 59.8 |
| 915 | 21:15 | 30-130 | 59.0 | 954 | 21:54 | 30-130 | 59.3 |
| 916 | 21:16 | 30-130 | 59.0 | 955 | 21:55 | 30-130 | 60.0 |
| 917 | 21:17 | 30-130 | 59.7 | 956 | 21:56 | 30-130 | 59.0 |
| 918 | 21:18 | 30-130 | 59.0 | 957 | 21:57 | 30-130 | 59.9 |
| 919 | 21:19 | 30-130 | 60.3 | 958 | 21:58 | 30-130 | 60.3 |
| 920 | 21:20 | 30-130 | 60.4 | 959 | 21:59 | 30-130 | 60.1 |
| 921 | 21:21 | 30-130 | 59.4 | 960 | 22:00 | 30-130 | 59.2 |

# BHARAT PETROLEUM CORPORATION LIMITED, BINA-M.P.

## NOISE MONITORING REPORT INSIDE GREEN BELT AREA

**Location-Tower No.1 Date-21/08/2023 July 2023 TO September 2023**

| NOISE MONITORING FOR NIGHT TIME (10:00 PM to 06:00 AM) | | | | | | | | | | | |
|---|---|---|---|---|---|---|---|---|---|---|---|
| Record No. | Time hh:mm | Range dB | Reading dB A | Record No. | Time hh:mm | Range dB | Reading dB A | Record No. | Time hh:mm | Range dB | Reading dB A |
| 961 | 22:01 | 30-130 | 57.3 | 1010 | 22:50 | 30-130 | 56.6 | 1059 | 23:39 | 30-130 | 56.9 |
| 962 | 22:02 | 30-130 | 58.3 | 1011 | 22:51 | 30-130 | 55.4 | 1060 | 23:40 | 30-130 | 57.2 |
| 963 | 22:03 | 30-130 | 57.4 | 1012 | 22:52 | 30-130 | 56.6 | 1061 | 23:41 | 30-130 | 54.6 |
| 964 | 22:04 | 30-130 | 56.3 | 1013 | 22:53 | 30-130 | 57.5 | 1062 | 23:42 | 30-130 | 56.2 |
| 965 | 22:05 | 30-130 | 58.0 | 1014 | 22:54 | 30-130 | 58.6 | 1063 | 23:43 | 30-130 | 57.4 |
| 966 | 22:06 | 30-130 | 56.6 | 1015 | 22:55 | 30-130 | 57.3 | 1064 | 23:44 | 30-130 | 56.6 |
| 967 | 22:07 | 30-130 | 57.6 | 1016 | 22:56 | 30-130 | 58.5 | 1065 | 23:45 | 30-130 | 59.9 |
| 968 | 22:08 | 30-130 | 58.6 | 1017 | 22:57 | 30-130 | 57.8 | 1066 | 23:46 | 30-130 | 57.6 |
| 969 | 22:09 | 30-130 | 57.2 | 1018 | 22:58 | 30-130 | 57.0 | 1067 | 23:47 | 30-130 | 57.3 |
| 970 | 22:10 | 30-130 | 56.6 | 1019 | 22:59 | 30-130 | 56.6 | 1068 | 23:48 | 30-130 | 56.2 |
| 971 | 22:11 | 30-130 | 59.1 | 1020 | 23:00 | 30-130 | 57.0 | 1069 | 23:49 | 30-130 | 57.3 |
| 972 | 22:12 | 30-130 | 58.4 | 1021 | 23:01 | 30-130 | 56.9 | 1070 | 23:50 | 30-130 | 58.1 |
| 973 | 22:13 | 30-130 | 56.6 | 1022 | 23:02 | 30-130 | 57.7 | 1071 | 23:51 | 30-130 | 57.3 |
| 974 | 22:14 | 30-130 | 57.6 | 1023 | 23:03 | 30-130 | 58.1 | 1072 | 23:52 | 30-130 | 56.2 |
| 975 | 22:15 | 30-130 | 56.2 | 1024 | 23:04 | 30-130 | 57.4 | 1073 | 23:53 | 30-130 | 57.6 |
| 976 | 22:16 | 30-130 | 57.0 | 1025 | 23:05 | 30-130 | 56.6 | 1074 | 23:54 | 30-130 | 57.4 |
| 977 | 22:17 | 30-130 | 57.8 | 1026 | 23:06 | 30-130 | 57.3 | 1075 | 23:55 | 30-130 | 58.6 |
| 978 | 22:18 | 30-130 | 56.2 | 1027 | 23:07 | 30-130 | 56.2 | 1076 | 23:56 | 30-130 | 57.4 |
| 979 | 22:19 | 30-130 | 57.8 | 1028 | 23:08 | 30-130 | 58.5 | 1077 | 23:57 | 30-130 | 56.6 |
| 980 | 22:20 | 30-130 | 56.6 | 1029 | 23:09 | 30-130 | 57.1 | 1078 | 23:58 | 30-130 | 57.6 |
| 981 | 22:21 | 30-130 | 57.9 | 1030 | 23:10 | 30-130 | 56.3 | 1079 | 23:59 | 30-130 | 56.6 |
| 982 | 22:22 | 30-130 | 58.8 | 1031 | 23:11 | 30-130 | 56.2 | 1080 | 0:00 | 30-130 | 57.6 |
| 983 | 22:23 | 30-130 | 57.6 | 1032 | 23:12 | 30-130 | 57.7 | 1081 | 0:01 | 30-130 | 56.6 |
| 984 | 22:24 | 30-130 | 56.0 | 1033 | 23:13 | 30-130 | 56.9 | 1082 | 0:02 | 30-130 | 56.4 |
| 985 | 22:25 | 30-130 | 57.6 | 1034 | 23:14 | 30-130 | 57.4 | 1083 | 0:03 | 30-130 | 56.6 |
| 986 | 22:26 | 30-130 | 56.5 | 1035 | 23:15 | 30-130 | 58.2 | 1084 | 0:04 | 30-130 | 56.0 |
| 987 | 22:27 | 30-130 | 57.6 | 1036 | 23:16 | 30-130 | 56.6 | 1085 | 0:05 | 30-130 | 56.5 |
| 988 | 22:28 | 30-130 | 57.7 | 1037 | 23:17 | 30-130 | 56.2 | 1086 | 0:06 | 30-130 | 56.0 |
| 989 | 22:29 | 30-130 | 56.6 | 1038 | 23:18 | 30-130 | 56.2 | 1087 | 0:07 | 30-130 | 56.0 |
| 990 | 22:30 | 30-130 | 58.5 | 1039 | 23:19 | 30-130 | 57.6 | 1088 | 0:08 | 30-130 | 56.0 |
| 991 | 22:31 | 30-130 | 56.2 | 1040 | 23:20 | 30-130 | 56.2 | 1089 | 0:09 | 30-130 | 56.5 |
| 992 | 22:32 | 30-130 | 57.5 | 1041 | 23:21 | 30-130 | 57.2 | 1090 | 0:10 | 30-130 | 56.1 |
| 993 | 22:33 | 30-130 | 57.6 | 1042 | 23:22 | 30-130 | 57.6 | 1091 | 0:11 | 30-130 | 56.1 |
| 994 | 22:34 | 30-130 | 56.6 | 1043 | 23:23 | 30-130 | 58.1 | 1092 | 0:12 | 30-130 | 56.3 |
| 995 | 22:35 | 30-130 | 57.9 | 1044 | 23:24 | 30-130 | 56.7 | 1093 | 0:13 | 30-130 | 56.5 |
| 996 | 22:36 | 30-130 | 58.5 | 1045 | 23:25 | 30-130 | 56.6 | 1094 | 0:14 | 30-130 | 55.9 |
| 997 | 22:37 | 30-130 | 56.3 | 1046 | 23:26 | 30-130 | 57.6 | 1095 | 0:15 | 30-130 | 56.6 |
| 998 | 22:38 | 30-130 | 57.2 | 1047 | 23:27 | 30-130 | 58.7 | 1096 | 0:16 | 30-130 | 56.3 |
| 999 | 22:39 | 30-130 | 57.2 | 1048 | 23:28 | 30-130 | 56.6 | 1097 | 0:17 | 30-130 | 56.1 |
| 1000 | 22:40 | 30-130 | 56.5 | 1049 | 23:29 | 30-130 | 57.4 | 1098 | 0:18 | 30-130 | 56.4 |
| 1001 | 22:41 | 30-130 | 58.2 | 1050 | 23:30 | 30-130 | 55.9 | 1099 | 0:19 | 30-130 | 56.7 |
| 1002 | 22:42 | 30-130 | 59.7 | 1051 | 23:31 | 30-130 | 56.7 | 1100 | 0:20 | 30-130 | 56.1 |
| 1003 | 22:43 | 30-130 | 58.0 | 1052 | 23:32 | 30-130 | 57.9 | 1101 | 0:21 | 30-130 | 56.6 |
| 1004 | 22:44 | 30-130 | 57.1 | 1053 | 23:33 | 30-130 | 56.7 | 1102 | 0:22 | 30-130 | 56.2 |
| 1005 | 22:45 | 30-130 | 57.6 | 1054 | 23:34 | 30-130 | 57.2 | 1103 | 0:23 | 30-130 | 56.1 |
| 1006 | 22:46 | 30-130 | 58.1 | 1055 | 23:35 | 30-130 | 56.6 | 1104 | 0:24 | 30-130 | 56.3 |
| 1007 | 22:47 | 30-130 | 57.4 | 1056 | 23:36 | 30-130 | 57.4 | 1105 | 0:25 | 30-130 | 56.4 |
| 1008 | 22:48 | 30-130 | 56.6 | 1057 | 23:37 | 30-130 | 55.6 | 1106 | 0:26 | 30-130 | 56.2 |
| 1009 | 22:49 | 30-130 | 57.1 | 1058 | 23:38 | 30-130 | 56.6 | 1107 | 0:27 | 30-130 | 56.1 |

# BHARAT PETROLEUM CORPORATION LIMITED, BINA-M.P.

## NOISE MONITORING REPORT INSIDE GREEN BELT AREA

**Location-Tower No.1 Date-21/08/2023 July 2023 TO September 2023**

| NOISE MONITORING FOR NIGHT TIME (10:00 PM to 06:00 AM) | | | | | | | | | | | |
|---|---|---|---|---|---|---|---|---|---|---|---|
| Record No. | Time hh:mm | Range dB | Reading dB A | Record No. | Time hh:mm | Range dB | Reading dB A | Record No. | Time hh:mm | Range dB | Reading dB A |
| 1108 | 0:28 | 30-130 | 56.2 | 1157 | 1:17 | 30-130 | 57.5 | 1206 | 2:06 | 30-130 | 55.8 |
| 1109 | 0:29 | 30-130 | 56.2 | 1158 | 1:18 | 30-130 | 58.6 | 1207 | 2:07 | 30-130 | 56.2 |
| 1110 | 0:30 | 30-130 | 56.0 | 1159 | 1:19 | 30-130 | 57.6 | 1208 | 2:08 | 30-130 | 55.8 |
| 1111 | 0:31 | 30-130 | 56.2 | 1160 | 1:20 | 30-130 | 57.4 | 1209 | 2:09 | 30-130 | 56.3 |
| 1112 | 0:32 | 30-130 | 56.2 | 1161 | 1:21 | 30-130 | 56.6 | 1210 | 2:10 | 30-130 | 56.3 |
| 1113 | 0:33 | 30-130 | 56.3 | 1162 | 1:22 | 30-130 | 55.6 | 1211 | 2:11 | 30-130 | 55.8 |
| 1114 | 0:34 | 30-130 | 56.2 | 1163 | 1:23 | 30-130 | 58.4 | 1212 | 2:12 | 30-130 | 56.3 |
| 1115 | 0:35 | 30-130 | 56.0 | 1164 | 1:24 | 30-130 | 56.6 | 1213 | 2:13 | 30-130 | 56.2 |
| 1116 | 0:36 | 30-130 | 56.5 | 1165 | 1:25 | 30-130 | 58.5 | 1214 | 2:14 | 30-130 | 55.8 |
| 1117 | 0:37 | 30-130 | 56.3 | 1166 | 1:26 | 30-130 | 56.6 | 1215 | 2:15 | 30-130 | 56.4 |
| 1118 | 0:38 | 30-130 | 56.1 | 1167 | 1:27 | 30-130 | 57.3 | 1216 | 2:16 | 30-130 | 55.9 |
| 1119 | 0:39 | 30-130 | 56.6 | 1168 | 1:28 | 30-130 | 57.5 | 1217 | 2:17 | 30-130 | 56.5 |
| 1120 | 0:40 | 30-130 | 56.0 | 1169 | 1:29 | 30-130 | 58.8 | 1218 | 2:18 | 30-130 | 55.9 |
| 1121 | 0:41 | 30-130 | 56.5 | 1170 | 1:30 | 30-130 | 57.5 | 1219 | 2:19 | 30-130 | 55.8 |
| 1122 | 0:42 | 30-130 | 56.3 | 1171 | 1:31 | 30-130 | 56.6 | 1220 | 2:20 | 30-130 | 55.7 |
| 1123 | 0:43 | 30-130 | 56.7 | 1172 | 1:32 | 30-130 | 57.7 | 1221 | 2:21 | 30-130 | 55.8 |
| 1124 | 0:44 | 30-130 | 55.9 | 1173 | 1:33 | 30-130 | 56.5 | 1222 | 2:22 | 30-130 | 56.4 |
| 1125 | 0:45 | 30-130 | 56.1 | 1174 | 1:34 | 30-130 | 56.6 | 1223 | 2:23 | 30-130 | 55.8 |
| 1126 | 0:46 | 30-130 | 56.7 | 1175 | 1:35 | 30-130 | 57.4 | 1224 | 2:24 | 30-130 | 56.2 |
| 1127 | 0:47 | 30-130 | 56.1 | 1176 | 1:36 | 30-130 | 58.6 | 1225 | 2:25 | 30-130 | 56.3 |
| 1128 | 0:48 | 30-130 | 56.5 | 1177 | 1:37 | 30-130 | 58.4 | 1226 | 2:26 | 30-130 | 56.5 |
| 1129 | 0:49 | 30-130 | 56.1 | 1178 | 1:38 | 30-130 | 57.2 | 1227 | 2:27 | 30-130 | 55.8 |
| 1130 | 0:50 | 30-130 | 56.6 | 1179 | 1:39 | 30-130 | 55.4 | 1228 | 2:28 | 30-130 | 56.1 |
| 1131 | 0:51 | 30-130 | 56.6 | 1180 | 1:40 | 30-130 | 56.6 | 1229 | 2:29 | 30-130 | 56.1 |
| 1132 | 0:52 | 30-130 | 56.1 | 1181 | 1:41 | 30-130 | 58.6 | 1230 | 2:30 | 30-130 | 56.4 |
| 1133 | 0:53 | 30-130 | 56.2 | 1182 | 1:42 | 30-130 | 57.5 | 1231 | 2:31 | 30-130 | 55.9 |
| 1134 | 0:54 | 30-130 | 56.6 | 1183 | 1:43 | 30-130 | 58.6 | 1232 | 2:32 | 30-130 | 55.7 |
| 1135 | 0:55 | 30-130 | 55.9 | 1184 | 1:44 | 30-130 | 57.6 | 1233 | 2:33 | 30-130 | 56.3 |
| 1136 | 0:56 | 30-130 | 56.6 | 1185 | 1:45 | 30-130 | 56.0 | 1234 | 2:34 | 30-130 | 56.6 |
| 1137 | 0:57 | 30-130 | 56.1 | 1186 | 1:46 | 30-130 | 56.2 | 1235 | 2:35 | 30-130 | 55.9 |
| 1138 | 0:58 | 30-130 | 55.9 | 1187 | 1:47 | 30-130 | 55.5 | 1236 | 2:36 | 30-130 | 56.3 |
| 1139 | 0:59 | 30-130 | 56.4 | 1188 | 1:48 | 30-130 | 56.9 | 1237 | 2:37 | 30-130 | 55.9 |
| 1140 | 1:00 | 30-130 | 56.0 | 1189 | 1:49 | 30-130 | 55.2 | 1238 | 2:38 | 30-130 | 56.3 |
| 1141 | 1:01 | 30-130 | 56.6 | 1190 | 1:50 | 30-130 | 56.5 | 1239 | 2:39 | 30-130 | 55.8 |
| 1142 | 1:02 | 30-130 | 58.4 | 1191 | 1:51 | 30-130 | 57.5 | 1240 | 2:40 | 30-130 | 56.1 |
| 1143 | 1:03 | 30-130 | 56.6 | 1192 | 1:52 | 30-130 | 56.9 | 1241 | 2:41 | 30-130 | 55.9 |
| 1144 | 1:04 | 30-130 | 56.4 | 1193 | 1:53 | 30-130 | 57.5 | 1242 | 2:42 | 30-130 | 56.2 |
| 1145 | 1:05 | 30-130 | 57.7 | 1194 | 1:54 | 30-130 | 58.9 | 1243 | 2:43 | 30-130 | 56.3 |
| 1146 | 1:06 | 30-130 | 56.6 | 1195 | 1:55 | 30-130 | 58.8 | 1244 | 2:44 | 30-130 | 56.4 |
| 1147 | 1:07 | 30-130 | 56.6 | 1196 | 1:56 | 30-130 | 56.9 | 1245 | 2:45 | 30-130 | 56.5 |
| 1148 | 1:08 | 30-130 | 58.4 | 1197 | 1:57 | 30-130 | 57.5 | 1246 | 2:46 | 30-130 | 56.6 |
| 1149 | 1:09 | 30-130 | 56.6 | 1198 | 1:58 | 30-130 | 55.1 | 1247 | 2:47 | 30-130 | 56.2 |
| 1150 | 1:10 | 30-130 | 57.6 | 1199 | 1:59 | 30-130 | 56.6 | 1248 | 2:48 | 30-130 | 55.8 |
| 1151 | 1:11 | 30-130 | 56.9 | 1200 | 2:00 | 30-130 | 57.2 | 1249 | 2:49 | 30-130 | 56.3 |
| 1152 | 1:12 | 30-130 | 57.6 | 1201 | 2:01 | 30-130 | 56.0 | 1250 | 2:50 | 30-130 | 56.1 |
| 1153 | 1:13 | 30-130 | 56.6 | 1202 | 2:02 | 30-130 | 56.1 | 1251 | 2:51 | 30-130 | 56.0 |
| 1154 | 1:14 | 30-130 | 55.6 | 1203 | 2:03 | 30-130 | 56.1 | 1252 | 2:52 | 30-130 | 55.8 |
| 1155 | 1:15 | 30-130 | 57.6 | 1204 | 2:04 | 30-130 | 55.8 | 1253 | 2:53 | 30-130 | 56.3 |
| 1156 | 1:16 | 30-130 | 56.5 | 1205 | 2:05 | 30-130 | 56.2 | 1254 | 2:54 | 30-130 | 56.2 |

# BHARAT PETROLEUM CORPORATION LIMITED, BINA-M.P.

## NOISE MONITORING REPORT INSIDE GREEN BELT AREA

**Location-Tower No.1 Date-21/08/2023 July 2023 TO September 2023**

| NOISE MONITORING FOR NIGHT TIME (10:00 PM to 06:00 AM) | | | | | | | | | | | |
|---|---|---|---|---|---|---|---|---|---|---|---|
| Record No. | Time hh:mm | Range dB | Reading dB A | Record No. | Time hh:mm | Range dB | Reading dB A | Record No. | Time hh:mm | Range dB | Reading dB A |
| 1255 | 2:55 | 30-130 | 55.9 | 1304 | 3:44 | 30-130 | 56.2 | 1353 | 4:33 | 30-130 | 56.6 |
| 1256 | 2:56 | 30-130 | 56.0 | 1305 | 3:45 | 30-130 | 57.7 | 1354 | 4:34 | 30-130 | 57.9 |
| 1257 | 2:57 | 30-130 | 56.4 | 1306 | 3:46 | 30-130 | 58.5 | 1355 | 4:35 | 30-130 | 58.8 |
| 1258 | 2:58 | 30-130 | 56.4 | 1307 | 3:47 | 30-130 | 57.6 | 1356 | 4:36 | 30-130 | 57.6 |
| 1259 | 2:59 | 30-130 | 56.6 | 1308 | 3:48 | 30-130 | 56.6 | 1357 | 4:37 | 30-130 | 56.0 |
| 1260 | 3:00 | 30-130 | 56.5 | 1309 | 3:49 | 30-130 | 57.7 | 1358 | 4:38 | 30-130 | 57.6 |
| 1261 | 3:01 | 30-130 | 54.7 | 1310 | 3:50 | 30-130 | 58.7 | 1359 | 4:39 | 30-130 | 56.5 |
| 1262 | 3:02 | 30-130 | 56.5 | 1311 | 3:51 | 30-130 | 57.3 | 1360 | 4:40 | 30-130 | 57.6 |
| 1263 | 3:03 | 30-130 | 56.9 | 1312 | 3:52 | 30-130 | 56.4 | 1361 | 4:41 | 30-130 | 57.7 |
| 1264 | 3:04 | 30-130 | 55.7 | 1313 | 3:53 | 30-130 | 57.2 | 1362 | 4:42 | 30-130 | 56.6 |
| 1265 | 3:05 | 30-130 | 56.1 | 1314 | 3:54 | 30-130 | 56.6 | 1363 | 4:43 | 30-130 | 58.5 |
| 1266 | 3:06 | 30-130 | 57.7 | 1315 | 3:55 | 30-130 | 58.1 | 1364 | 4:44 | 30-130 | 56.2 |
| 1267 | 3:07 | 30-130 | 58.2 | 1316 | 3:56 | 30-130 | 57.4 | 1365 | 4:46 | 30-130 | 57.5 |
| 1268 | 3:08 | 30-130 | 56.3 | 1317 | 3:57 | 30-130 | 58.5 | 1366 | 4:47 | 30-130 | 57.6 |
| 1269 | 3:09 | 30-130 | 58.2 | 1318 | 3:58 | 30-130 | 59.1 | 1367 | 4:48 | 30-130 | 56.6 |
| 1270 | 3:10 | 30-130 | 57.1 | 1319 | 3:59 | 30-130 | 58.1 | 1368 | 4:49 | 30-130 | 57.9 |
| 1271 | 3:11 | 30-130 | 57.2 | 1320 | 4:00 | 30-130 | 59.6 | 1369 | 4:50 | 30-130 | 58.5 |
| 1272 | 3:12 | 30-130 | 56.6 | 1321 | 4:01 | 30-130 | 56.2 | 1370 | 4:51 | 30-130 | 56.3 |
| 1273 | 3:13 | 30-130 | 57.6 | 1322 | 4:02 | 30-130 | 57.3 | 1371 | 4:52 | 30-130 | 57.2 |
| 1274 | 3:14 | 30-130 | 58.1 | 1323 | 4:03 | 30-130 | 56.1 | 1372 | 4:53 | 30-130 | 57.2 |
| 1275 | 3:15 | 30-130 | 57.2 | 1324 | 4:04 | 30-130 | 57.3 | 1373 | 4:54 | 30-130 | 56.5 |
| 1276 | 3:16 | 30-130 | 56.2 | 1325 | 4:05 | 30-130 | 56.2 | 1374 | 4:55 | 30-130 | 58.2 |
| 1277 | 3:17 | 30-130 | 58.4 | 1326 | 4:06 | 30-130 | 57.6 | 1375 | 4:55 | 30-130 | 59.7 |
| 1278 | 3:18 | 30-130 | 56.7 | 1327 | 4:07 | 30-130 | 58.4 | 1376 | 4:56 | 30-130 | 58.0 |
| 1279 | 3:19 | 30-130 | 57.6 | 1328 | 4:08 | 30-130 | 57.6 | 1377 | 4:57 | 30-130 | 57.1 |
| 1280 | 3:20 | 30-130 | 56.2 | 1329 | 4:09 | 30-130 | 58.4 | 1378 | 4:58 | 30-130 | 57.6 |
| 1281 | 3:21 | 30-130 | 58.6 | 1330 | 4:10 | 30-130 | 57.9 | 1379 | 4:59 | 30-130 | 58.1 |
| 1282 | 3:22 | 30-130 | 57.2 | 1331 | 4:11 | 30-130 | 56.2 | 1380 | 5:00 | 30-130 | 57.4 |
| 1283 | 3:23 | 30-130 | 58.0 | 1332 | 4:12 | 30-130 | 57.0 | 1381 | 5:01 | 30-130 | 57.3 |
| 1284 | 3:24 | 30-130 | 59.2 | 1333 | 4:13 | 30-130 | 56.8 | 1382 | 5:02 | 30-130 | 56.8 |
| 1285 | 3:25 | 30-130 | 57.3 | 1334 | 4:14 | 30-130 | 57.3 | 1383 | 5:03 | 30-130 | 57.3 |
| 1286 | 3:26 | 30-130 | 58.0 | 1335 | 4:15 | 30-130 | 58.3 | 1384 | 5:04 | 30-130 | 56.2 |
| 1287 | 3:27 | 30-130 | 57.9 | 1336 | 4:16 | 30-130 | 57.4 | 1385 | 5:05 | 30-130 | 57.3 |
| 1288 | 3:28 | 30-130 | 57.5 | 1337 | 4:17 | 30-130 | 56.3 | 1386 | 5:06 | 30-130 | 56.1 |
| 1289 | 3:29 | 30-130 | 56.4 | 1338 | 4:18 | 30-130 | 58.0 | 1387 | 5:07 | 30-130 | 57.3 |
| 1290 | 3:30 | 30-130 | 57.3 | 1339 | 4:19 | 30-130 | 56.6 | 1388 | 5:08 | 30-130 | 56.2 |
| 1291 | 3:31 | 30-130 | 58.8 | 1340 | 4:20 | 30-130 | 57.6 | 1389 | 5:09 | 30-130 | 57.6 |
| 1292 | 3:32 | 30-130 | 57.1 | 1341 | 4:21 | 30-130 | 58.6 | 1390 | 5:10 | 30-130 | 58.4 |
| 1293 | 3:33 | 30-130 | 56.6 | 1342 | 4:22 | 30-130 | 57.2 | 1391 | 5:11 | 30-130 | 57.6 |
| 1294 | 3:34 | 30-130 | 57.9 | 1343 | 4:23 | 30-130 | 56.6 | 1392 | 5:12 | 30-130 | 58.4 |
| 1295 | 3:35 | 30-130 | 58.1 | 1344 | 4:24 | 30-130 | 59.1 | 1393 | 5:13 | 30-130 | 57.9 |
| 1296 | 3:36 | 30-130 | 56.2 | 1345 | 4:25 | 30-130 | 58.4 | 1394 | 5:14 | 30-130 | 56.2 |
| 1297 | 3:37 | 30-130 | 57.2 | 1346 | 4:26 | 30-130 | 56.6 | 1395 | 5:15 | 30-130 | 57.0 |
| 1298 | 3:38 | 30-130 | 56.2 | 1347 | 4:27 | 30-130 | 57.6 | 1396 | 5:16 | 30-130 | 56.8 |
| 1299 | 3:39 | 30-130 | 58.7 | 1348 | 4:28 | 30-130 | 56.2 | 1397 | 5:17 | 30-130 | 57.3 |
| 1300 | 3:40 | 30-130 | 56.0 | 1349 | 4:29 | 30-130 | 57.0 | 1398 | 5:18 | 30-130 | 58.3 |
| 1301 | 3:41 | 30-130 | 57.6 | 1350 | 4:30 | 30-130 | 57.8 | 1399 | 5:19 | 30-130 | 57.4 |
| 1302 | 3:42 | 30-130 | 56.6 | 1351 | 4:31 | 30-130 | 56.2 | 1400 | 5:20 | 30-130 | 56.3 |
| 1303 | 3:43 | 30-130 | 57.0 | 1352 | 4:32 | 30-130 | 57.8 | 1401 | 5:21 | 30-130 | 58.0 |

# BHARAT PETROLEUM CORPORATION LIMITED, BINA-M.P.

## NOISE MONITORING REPORT INSIDE GREEN BELT AREA

**Location-Tower No.1 Date-21/08/2023 July 2023 TO September 2023**

| NOISE MONITORING FOR NIGHT TIME (10:00 PM to 06:00 AM) | | | |
|---|---|---|---|
| Record No. | Time hh:mm | Range dB | Reading dB A |
| 1402 | 5:22 | 30-130 | 56.6 |
| 1403 | 5:23 | 30-130 | 57.6 |
| 1404 | 5:24 | 30-130 | 58.6 |
| 1405 | 5:25 | 30-130 | 57.2 |
| 1406 | 5:26 | 30-130 | 56.6 |
| 1407 | 5:27 | 30-130 | 59.1 |
| 1408 | 5:28 | 30-130 | 58.4 |
| 1409 | 5:29 | 30-130 | 56.6 |
| 1410 | 5:30 | 30-130 | 57.6 |
| 1411 | 5:31 | 30-130 | 56.2 |
| 1412 | 5:32 | 30-130 | 57.0 |
| 1413 | 5:33 | 30-130 | 57.8 |
| 1414 | 5:34 | 30-130 | 56.2 |
| 1415 | 5:35 | 30-130 | 57.8 |
| 1416 | 5:36 | 30-130 | 56.6 |
| 1417 | 5:37 | 30-130 | 57.9 |
| 1418 | 5:38 | 30-130 | 58.8 |
| 1419 | 5:39 | 30-130 | 57.6 |
| 1420 | 5:40 | 30-130 | 56.0 |
| 1421 | 5:41 | 30-130 | 57.6 |
| 1422 | 5:42 | 30-130 | 56.5 |
| 1423 | 5:43 | 30-130 | 57.6 |
| 1424 | 5:44 | 30-130 | 57.7 |
| 1425 | 5:45 | 30-130 | 56.6 |
| 1426 | 4:46 | 30-130 | 58.5 |
| 1427 | 5:47 | 30-130 | 56.2 |
| 1428 | 5:48 | 30-130 | 57.5 |
| 1429 | 5:49 | 30-130 | 57.6 |
| 1430 | 5:50 | 30-130 | 56.6 |
| 1431 | 5:51 | 30-130 | 53.6 |
| 1432 | 5:52 | 30-130 | 52.4 |
| 1433 | 5:53 | 30-130 | 53.6 |
| 1434 | 5:54 | 30-130 | 52.4 |
| 1435 | 5:55 | 30-130 | 54.2 |
| 1436 | 5:56 | 30-130 | 52.3 |
| 1437 | 5:57 | 30-130 | 53.5 |
| 1438 | 5:58 | 30-130 | 53.6 |
| 1439 | 5:59 | 30-130 | 53.2 |
| 1440 | 6:00 | 30-130 | 52.2 |

# BHARAT PETROLEUM CORPORATION LIMITED, BINA-M.P.

## NOISE MONITORING REPORT INSIDE GREEN BELT AREA

**Location-Tower No.3 Date-23/08/2023 July 2023 TO September 2023**

| NOISE MONITORING FOR DAY TIME (06:00 AM to 10:00 PM) | | | | | | | | | | | |
|---|---|---|---|---|---|---|---|---|---|---|---|
| Record No. | Time hh:mm | Range dB | Reading dB A | Record No. | Time hh:mm | Range dB | Reading dB A | Record No. | Time hh:mm | Range dB | Reading dB A |
| 1 | 6:01 | 30-130 | 53.6 | 50 | 6:50 | 30-130 | 53.4 | 99 | 7:39 | 30-130 | 52.3 |
| 2 | 6:02 | 30-130 | 51.2 | 51 | 6:51 | 30-130 | 52.6 | 100 | 7:40 | 30-130 | 51.2 |
| 3 | 6:03 | 30-130 | 52.3 | 52 | 6:52 | 30-130 | 52.9 | 101 | 7:41 | 30-130 | 52.3 |
| 4 | 6:04 | 30-130 | 53.1 | 53 | 6:53 | 30-130 | 53.9 | 102 | 7:42 | 30-130 | 51.2 |
| 5 | 6:05 | 30-130 | 52.1 | 54 | 6:54 | 30-130 | 51.6 | 103 | 7:43 | 30-130 | 52.3 |
| 6 | 6:06 | 30-130 | 53.1 | 55 | 6:55 | 30-130 | 52.6 | 104 | 7:44 | 30-130 | 52.3 |
| 7 | 6:07 | 30-130 | 51.6 | 56 | 6:56 | 30-130 | 53.4 | 105 | 7:45 | 30-130 | 53.2 |
| 8 | 6:08 | 30-130 | 52.6 | 57 | 6:57 | 30-130 | 51.6 | 106 | 7:46 | 30-130 | 51.2 |
| 9 | 6:09 | 30-130 | 51.9 | 58 | 6:58 | 30-130 | 53.0 | 107 | 7:47 | 30-130 | 55.3 |
| 10 | 6:10 | 30-130 | 52.6 | 59 | 6:59 | 30-130 | 53.6 | 108 | 7:48 | 30-130 | 53.3 |
| 11 | 6:11 | 30-130 | 52.1 | 60 | 7:00 | 30-130 | 51.6 | 109 | 7:49 | 30-130 | 51.2 |
| 12 | 6:12 | 30-130 | 51.4 | 61 | 7:01 | 30-130 | 52.6 | 110 | 7:50 | 30-130 | 53.6 |
| 13 | 6:13 | 30-130 | 53.1 | 62 | 7:02 | 30-130 | 53.2 | 111 | 7:51 | 30-130 | 51.2 |
| 14 | 6:14 | 30-130 | 52.9 | 63 | 7:03 | 30-130 | 52.6 | 112 | 7:52 | 30-130 | 53.6 |
| 15 | 6:15 | 30-130 | 53.9 | 64 | 7:04 | 30-130 | 53.4 | 113 | 7:53 | 30-130 | 51.3 |
| 16 | 6:16 | 30-130 | 51.6 | 65 | 7:05 | 30-130 | 52.3 | 114 | 7:54 | 30-130 | 52.3 |
| 17 | 6:17 | 30-130 | 52.9 | 66 | 7:06 | 30-130 | 53.6 | 115 | 7:55 | 30-130 | 53.3 |
| 18 | 6:18 | 30-130 | 51.6 | 67 | 7:07 | 30-130 | 51.2 | 116 | 7:56 | 30-130 | 52.3 |
| 19 | 6:19 | 30-130 | 53.2 | 68 | 7:08 | 30-130 | 51.6 | 117 | 7:57 | 30-130 | 52.3 |
| 20 | 6:20 | 30-130 | 52.3 | 69 | 7:09 | 30-130 | 53.4 | 118 | 7:58 | 30-130 | 52.2 |
| 21 | 6:21 | 30-130 | 52.6 | 70 | 7:10 | 30-130 | 57.8 | 119 | 7:59 | 30-130 | 52.3 |
| 22 | 6:22 | 30-130 | 52.6 | 71 | 7:11 | 30-130 | 53.6 | 120 | 8:00 | 30-130 | 51.2 |
| 23 | 6:23 | 30-130 | 53.4 | 72 | 7:12 | 30-130 | 51.9 | 121 | 8:01 | 30-130 | 56.0 |
| 24 | 6:24 | 30-130 | 51.6 | 73 | 7:13 | 30-130 | 52.6 | 122 | 8:02 | 30-130 | 54.6 |
| 25 | 6:25 | 30-130 | 53.9 | 74 | 7:14 | 30-130 | 53.2 | 123 | 8:03 | 30-130 | 51.6 |
| 26 | 6:26 | 30-130 | 52.6 | 75 | 7:15 | 30-130 | 52.6 | 124 | 8:04 | 30-130 | 53.6 |
| 27 | 6:27 | 30-130 | 52.6 | 76 | 7:16 | 30-130 | 52.6 | 125 | 8:05 | 30-130 | 54.6 |
| 28 | 6:28 | 30-130 | 51.9 | 77 | 7:17 | 30-130 | 53.6 | 126 | 8:06 | 30-130 | 53.2 |
| 29 | 6:29 | 30-130 | 52.6 | 78 | 7:18 | 30-130 | 52.6 | 127 | 8:07 | 30-130 | 51.6 |
| 30 | 6:30 | 30-130 | 51.9 | 79 | 7:19 | 30-130 | 53.9 | 128 | 8:08 | 30-130 | 52.6 |
| 31 | 6:31 | 30-130 | 55.9 | 80 | 7:20 | 30-130 | 55.6 | 129 | 8:09 | 30-130 | 53.6 |
| 32 | 6:32 | 30-130 | 52.6 | 81 | 7:21 | 30-130 | 51.6 | 130 | 8:10 | 30-130 | 54.6 |
| 33 | 6:33 | 30-130 | 52.6 | 82 | 7:22 | 30-130 | 52.6 | 131 | 8:11 | 30-130 | 53.6 |
| 34 | 6:34 | 30-130 | 53.6 | 83 | 7:23 | 30-130 | 53.6 | 132 | 8:12 | 30-130 | 54.6 |
| 35 | 6:35 | 30-130 | 51.6 | 84 | 7:24 | 30-130 | 51.6 | 133 | 8:13 | 30-130 | 53.6 |
| 36 | 6:36 | 30-130 | 53.4 | 85 | 7:25 | 30-130 | 52.6 | 134 | 8:14 | 30-130 | 55.3 |
| 37 | 6:37 | 30-130 | 52.9 | 86 | 7:26 | 30-130 | 53.2 | 135 | 8:15 | 30-130 | 54.6 |
| 38 | 6:38 | 30-130 | 53.6 | 87 | 7:27 | 30-130 | 52.5 | 136 | 8:16 | 30-130 | 55.8 |
| 39 | 6:39 | 30-130 | 51.6 | 88 | 7:28 | 30-130 | 51.6 | 137 | 8:17 | 30-130 | 52.3 |
| 40 | 6:40 | 30-130 | 52.6 | 89 | 7:29 | 30-130 | 51.6 | 138 | 8:18 | 30-130 | 52.1 |
| 41 | 6:41 | 30-130 | 53.5 | 90 | 7:30 | 30-130 | 53.6 | 139 | 8:19 | 30-130 | 51.6 |
| 42 | 6:42 | 30-130 | 52.6 | 91 | 7:31 | 30-130 | 52.6 | 140 | 8:20 | 30-130 | 52.4 |
| 43 | 6:43 | 30-130 | 53.4 | 92 | 7:32 | 30-130 | 53.4 | 141 | 8:21 | 30-130 | 52.6 |
| 44 | 6:44 | 30-130 | 52.6 | 93 | 7:33 | 30-130 | 51.6 | 142 | 8:22 | 30-130 | 53.4 |
| 45 | 6:45 | 30-130 | 52.6 | 94 | 7:34 | 30-130 | 53.4 | 143 | 8:23 | 30-130 | 52.6 |
| 46 | 6:46 | 30-130 | 53.4 | 95 | 7:35 | 30-130 | 52.6 | 144 | 8:24 | 30-130 | 53.1 |
| 47 | 6:47 | 30-130 | 52.6 | 96 | 7:36 | 30-130 | 51.6 | 145 | 8:25 | 30-130 | 52.6 |
| 48 | 6:48 | 30-130 | 53.4 | 97 | 7:37 | 30-130 | 52.6 | 146 | 8:26 | 30-130 | 53.1 |
| 49 | 6:49 | 30-130 | 51.6 | 98 | 7:38 | 30-130 | 53.4 | 147 | 8:27 | 30-130 | 52.6 |

# BHARAT PETROLEUM CORPORATION LIMITED, BINA-M.P.

## NOISE MONITORING REPORT INSIDE GREEN BELT AREA

**Location-Tower No.3 Date-23/08/2023 July 2023 TO September 2023**

| NOISE MONITORING FOR DAY TIME (06:00 AM to 10:00 PM) | | | | | | | | | | | |
|---|---|---|---|---|---|---|---|---|---|---|---|
| Record No. | Time hh:mm | Range dB | Reading dB A | Record No. | Time hh:mm | Range dB | Reading dB A | Record No. | Time hh:mm | Range dB | Reading dB A |
| 148 | 8:28 | 30-130 | 52.4 | 197 | 9:17 | 30-130 | 53.2 | 246 | 10:06 | 30-130 | 56.5 |
| 149 | 8:29 | 30-130 | 52.6 | 198 | 9:18 | 30-130 | 52.3 | 247 | 10:07 | 30-130 | 56.9 |
| 150 | 8:30 | 30-130 | 53.1 | 199 | 9:19 | 30-130 | 53.4 | 248 | 10:08 | 30-130 | 52.6 |
| 151 | 8:31 | 30-130 | 53.6 | 200 | 9:20 | 30-130 | 52.3 | 249 | 10:09 | 30-130 | 55.3 |
| 152 | 8:32 | 30-130 | 54.5 | 201 | 9:21 | 30-130 | 52.6 | 250 | 10:10 | 30-130 | 52.6 |
| 153 | 8:33 | 30-130 | 54.6 | 202 | 9:22 | 30-130 | 54.6 | 251 | 10:11 | 30-130 | 54.6 |
| 154 | 8:34 | 30-130 | 54.6 | 203 | 9:23 | 30-130 | 53.7 | 252 | 10:12 | 30-130 | 54.6 |
| 155 | 8:35 | 30-130 | 53.6 | 204 | 9:24 | 30-130 | 52.3 | 253 | 10:13 | 30-130 | 55.4 |
| 156 | 8:36 | 30-130 | 54.3 | 205 | 9:25 | 30-130 | 53.3 | 254 | 10:14 | 30-130 | 54.6 |
| 157 | 8:37 | 30-130 | 54.2 | 206 | 9:26 | 30-130 | 53.2 | 255 | 10:15 | 30-130 | 56.3 |
| 158 | 8:38 | 30-130 | 53.2 | 207 | 9:27 | 30-130 | 53.6 | 256 | 10:16 | 30-130 | 54.2 |
| 159 | 8:39 | 30-130 | 54.2 | 208 | 9:28 | 30-130 | 52.9 | 257 | 10:17 | 30-130 | 54.0 |
| 160 | 8:40 | 30-130 | 54.2 | 209 | 9:29 | 30-130 | 53.6 | 258 | 10:18 | 30-130 | 52.4 |
| 161 | 8:41 | 30-130 | 54.2 | 210 | 9:30 | 30-130 | 52.3 | 259 | 10:19 | 30-130 | 52.6 |
| 162 | 8:42 | 30-130 | 53.9 | 211 | 9:31 | 30-130 | 53.6 | 260 | 10:20 | 30-130 | 53.4 |
| 163 | 8:43 | 30-130 | 52.6 | 212 | 9:32 | 30-130 | 54.3 | 261 | 10:21 | 30-130 | 54.6 |
| 164 | 8:44 | 30-130 | 54.2 | 213 | 9:33 | 30-130 | 52.3 | 262 | 10:22 | 30-130 | 52.4 |
| 165 | 8:45 | 30-130 | 54.2 | 214 | 9:34 | 30-130 | 53.4 | 263 | 10:23 | 30-130 | 52.3 |
| 166 | 8:46 | 30-130 | 54.2 | 215 | 9:35 | 30-130 | 52.9 | 264 | 10:24 | 30-130 | 53.6 |
| 167 | 8:47 | 30-130 | 54.3 | 216 | 3:36 | 30-130 | 52.6 | 265 | 10:25 | 30-130 | 52.3 |
| 168 | 8:48 | 30-130 | 52.6 | 217 | 9:37 | 30-130 | 53.8 | 266 | 10:26 | 30-130 | 54.6 |
| 169 | 8:49 | 30-130 | 54.2 | 218 | 9:38 | 30-130 | 52.3 | 267 | 10:27 | 30-130 | 53.2 |
| 170 | 8:50 | 30-130 | 53.4 | 219 | 9:39 | 30-130 | 53.2 | 268 | 10:28 | 30-130 | 53.6 |
| 171 | 8:51 | 30-130 | 52.6 | 220 | 9:40 | 30-130 | 52.6 | 269 | 10:29 | 30-130 | 52.3 |
| 172 | 8:52 | 30-130 | 53.2 | 221 | 9:41 | 30-130 | 52.8 | 270 | 10:30 | 30-130 | 53.4 |
| 173 | 8:53 | 30-130 | 52.6 | 222 | 9:42 | 30-130 | 54.3 | 271 | 10:31 | 30-130 | 54.2 |
| 174 | 8:54 | 30-130 | 52.6 | 223 | 9:43 | 30-130 | 53.2 | 272 | 10:32 | 30-130 | 53.6 |
| 175 | 8:55 | 30-130 | 53.4 | 224 | 9:44 | 30-130 | 53.5 | 273 | 10:33 | 30-130 | 52.6 |
| 176 | 8:56 | 30-130 | 52.6 | 225 | 9:45 | 30-130 | 54.6 | 274 | 10:34 | 30-130 | 53.1 |
| 177 | 8:57 | 30-130 | 53.2 | 226 | 9:46 | 30-130 | 54.8 | 275 | 10:35 | 30-130 | 54.2 |
| 178 | 8:58 | 30-130 | 53.0 | 227 | 9:47 | 30-130 | 53.9 | 276 | 10:36 | 30-130 | 55.3 |
| 179 | 8:59 | 30-130 | 52.6 | 228 | 9:48 | 30-130 | 53.7 | 277 | 10:37 | 30-130 | 52.6 |
| 180 | 9:00 | 30-130 | 51.6 | 229 | 9:49 | 30-130 | 53.7 | 278 | 10:38 | 30-130 | 53.2 |
| 181 | 9:01 | 30-130 | 54.6 | 230 | 9:50 | 30-130 | 53.6 | 279 | 10:39 | 30-130 | 52.6 |
| 182 | 9:02 | 30-130 | 54.7 | 231 | 9:51 | 30-130 | 52.4 | 280 | 10:40 | 30-130 | 53.2 |
| 183 | 9:03 | 30-130 | 54.6 | 232 | 9:52 | 30-130 | 53.6 | 281 | 10:41 | 30-130 | 52.6 |
| 184 | 9:04 | 30-130 | 53.6 | 233 | 9:53 | 30-130 | 58.4 | 282 | 10:42 | 30-130 | 53.2 |
| 185 | 9:05 | 30-130 | 54.2 | 234 | 9:54 | 30-130 | 52.6 | 283 | 10:43 | 30-130 | 52.1 |
| 186 | 9:06 | 30-130 | 54.2 | 235 | 9:55 | 30-130 | 55.3 | 284 | 10:44 | 30-130 | 52.3 |
| 187 | 9:07 | 30-130 | 52.4 | 236 | 9:56 | 30-130 | 53.0 | 285 | 10:45 | 30-130 | 54.6 |
| 188 | 9:08 | 30-130 | 52.6 | 237 | 9:57 | 30-130 | 54.3 | 286 | 10:46 | 30-130 | 52.3 |
| 189 | 9:09 | 30-130 | 53.4 | 238 | 9:58 | 30-130 | 53.6 | 287 | 10:47 | 30-130 | 52.3 |
| 190 | 9:10 | 30-130 | 53.6 | 239 | 9:59 | 30-130 | 53.6 | 288 | 10:48 | 30-130 | 53.1 |
| 191 | 9:11 | 30-130 | 54.5 | 240 | 10:00 | 30-130 | 52.6 | 289 | 10:49 | 30-130 | 52.6 |
| 192 | 9:12 | 30-130 | 53.6 | 241 | 10:01 | 30-130 | 53.6 | 290 | 10:50 | 30-130 | 53.2 |
| 193 | 9:13 | 30-130 | 54.6 | 242 | 10:02 | 30-130 | 57.2 | 291 | 10:51 | 30-130 | 53.3 |
| 194 | 9:14 | 30-130 | 54.2 | 243 | 10:03 | 30-130 | 56.6 | 292 | 10:52 | 30-130 | 52.0 |
| 195 | 9:15 | 30-130 | 53.6 | 244 | 10:04 | 30-130 | 56.5 | 293 | 10:53 | 30-130 | 52.3 |
| 196 | 9:16 | 30-130 | 54.2 | 245 | 10:05 | 30-130 | 56.3 | 294 | 10:54 | 30-130 | 53.6 |

# BHARAT PETROLEUM CORPORATION LIMITED, BINA-M.P.

## NOISE MONITORING REPORT INSIDE GREEN BELT AREA

**Location-Tower No.3 Date-23/08/2023 July 2023 TO September 2023**

| NOISE MONITORING FOR DAY TIME (06:00 AM to 10:00 PM) | | | | | | | | | | | |
|---|---|---|---|---|---|---|---|---|---|---|---|
| Record No. | Time hh:mm | Range dB | Reading dB A | Record No. | Time hh:mm | Range dB | Reading dB A | Record No. | Time hh:mm | Range dB | Reading dB A |
| 295 | 10:55 | 30-130 | 54.2 | 344 | 11:44 | 30-130 | 52.4 | 393 | 12:33 | 30-130 | 52.6 |
| 296 | 10:56 | 30-130 | 53.3 | 345 | 11:45 | 30-130 | 53.6 | 394 | 12:34 | 30-130 | 52.6 |
| 297 | 10:57 | 30-130 | 53.2 | 346 | 11:46 | 30-130 | 52.4 | 395 | 12:35 | 30-130 | 53.6 |
| 298 | 10:58 | 30-130 | 52.6 | 347 | 11:47 | 30-130 | 53.6 | 396 | 12:36 | 30-130 | 52.6 |
| 299 | 10:59 | 30-130 | 53.6 | 348 | 11:48 | 30-130 | 54.3 | 397 | 12:37 | 30-130 | 53.3 |
| 300 | 11:00 | 30-130 | 53.6 | 349 | 11:49 | 30-130 | 54.3 | 398 | 12:38 | 30-130 | 52.6 |
| 301 | 11:01 | 30-130 | 53.6 | 350 | 11:50 | 30-130 | 52.3 | 399 | 12:39 | 30-130 | 52.6 |
| 302 | 11:02 | 30-130 | 52.3 | 351 | 11:51 | 30-130 | 53.3 | 400 | 12:40 | 30-130 | 53.6 |
| 303 | 11:03 | 30-130 | 53.6 | 352 | 11:52 | 30-130 | 53.3 | 401 | 12:41 | 30-130 | 51.2 |
| 304 | 11:04 | 30-130 | 53.9 | 353 | 11:53 | 30-130 | 52.6 | 402 | 12:42 | 30-130 | 53.6 |
| 305 | 11:05 | 30-130 | 52.1 | 354 | 11:54 | 30-130 | 53.1 | 403 | 12:43 | 30-130 | 52.6 |
| 306 | 11:06 | 30-130 | 53.6 | 355 | 11:55 | 30-130 | 52.6 | 404 | 12:44 | 30-130 | 53.6 |
| 307 | 11:07 | 30-130 | 52.6 | 356 | 11:56 | 30-130 | 53.4 | 405 | 12:45 | 30-130 | 52.3 |
| 308 | 11:08 | 30-130 | 53.9 | 357 | 11:57 | 30-130 | 53.2 | 406 | 12:46 | 30-130 | 52.6 |
| 309 | 11:09 | 30-130 | 53.7 | 358 | 11:58 | 30-130 | 53.1 | 407 | 12:47 | 30-130 | 53.6 |
| 310 | 11:10 | 30-130 | 52.6 | 359 | 11:59 | 30-130 | 52.5 | 408 | 12:48 | 30-130 | 53.6 |
| 311 | 11:11 | 30-130 | 53.4 | 360 | 12:00 | 30-130 | 52.6 | 409 | 12:49 | 30-130 | 53.2 |
| 312 | 11:12 | 30-130 | 52.6 | 361 | 12:01 | 30-130 | 53.2 | 410 | 12:50 | 30-130 | 54.2 |
| 313 | 11:13 | 30-130 | 53.4 | 362 | 12:02 | 30-130 | 52.6 | 411 | 12:51 | 30-130 | 52.3 |
| 314 | 11:14 | 30-130 | 52.6 | 363 | 12:03 | 30-130 | 53.6 | 412 | 12:52 | 30-130 | 53.2 |
| 315 | 11:15 | 30-130 | 53.6 | 364 | 12:04 | 30-130 | 52.8 | 413 | 12:53 | 30-130 | 54.3 |
| 316 | 11:16 | 30-130 | 52.6 | 365 | 12:05 | 30-130 | 52.4 | 414 | 12:54 | 30-130 | 54.3 |
| 317 | 11:17 | 30-130 | 52.3 | 366 | 12:06 | 30-130 | 53.6 | 415 | 12:55 | 30-130 | 52.3 |
| 318 | 11:18 | 30-130 | 53.6 | 367 | 12:07 | 30-130 | 52.7 | 416 | 12:56 | 30-130 | 52.3 |
| 319 | 11:19 | 30-130 | 52.0 | 368 | 12:08 | 30-130 | 52.6 | 417 | 12:57 | 30-130 | 53.2 |
| 320 | 11:20 | 30-130 | 52.3 | 369 | 12:09 | 30-130 | 53.2 | 418 | 12:58 | 30-130 | 52.3 |
| 321 | 11:21 | 30-130 | 53.0 | 370 | 12:10 | 30-130 | 52.2 | 419 | 12:59 | 30-130 | 52.7 |
| 322 | 11:22 | 30-130 | 54.2 | 371 | 12:11 | 30-130 | 53.6 | 420 | 13:00 | 30-130 | 53.3 |
| 323 | 11:23 | 30-130 | 52.3 | 372 | 12:12 | 30-130 | 52.3 | 421 | 13:01 | 30-130 | 53.2 |
| 324 | 11:24 | 30-130 | 53.2 | 373 | 12:13 | 30-130 | 53.6 | 422 | 13:02 | 30-130 | 52.3 |
| 325 | 11:25 | 30-130 | 52.2 | 374 | 12:14 | 30-130 | 53.6 | 423 | 13:03 | 30-130 | 52.2 |
| 326 | 11:26 | 30-130 | 52.6 | 375 | 12:15 | 30-130 | 54.2 | 424 | 13:04 | 30-130 | 52.2 |
| 327 | 11:27 | 30-130 | 53.2 | 376 | 12:16 | 30-130 | 52.6 | 425 | 13:05 | 30-130 | 53.2 |
| 328 | 11:28 | 30-130 | 52.6 | 377 | 12:17 | 30-130 | 52.4 | 426 | 13:06 | 30-130 | 52.3 |
| 329 | 11:29 | 30-130 | 53.4 | 378 | 12:18 | 30-130 | 53.4 | 427 | 13:07 | 30-130 | 52.3 |
| 330 | 11:30 | 30-130 | 53.2 | 379 | 12:19 | 30-130 | 52.6 | 428 | 13:08 | 30-130 | 53.2 |
| 331 | 11:31 | 30-130 | 53.6 | 380 | 12:20 | 30-130 | 53.6 | 429 | 13:09 | 30-130 | 52.3 |
| 332 | 11:32 | 30-130 | 52.6 | 381 | 12:21 | 30-130 | 52.6 | 430 | 13:10 | 30-130 | 52.2 |
| 333 | 11:33 | 30-130 | 53.2 | 382 | 12:22 | 30-130 | 52.3 | 431 | 13:11 | 30-130 | 52.4 |
| 334 | 11:34 | 30-130 | 52.2 | 383 | 12:23 | 30-130 | 53.4 | 432 | 13:12 | 30-130 | 54.2 |
| 335 | 11:35 | 30-130 | 53.6 | 384 | 12:24 | 30-130 | 52.1 | 433 | 13:13 | 30-130 | 53.4 |
| 336 | 11:36 | 30-130 | 54.2 | 385 | 12:25 | 30-130 | 52.6 | 434 | 13:14 | 30-130 | 52.6 |
| 337 | 11:37 | 30-130 | 53.6 | 386 | 12:26 | 30-130 | 53.5 | 435 | 13:15 | 30-130 | 53.4 |
| 338 | 11:38 | 30-130 | 54.6 | 387 | 12:27 | 30-130 | 52.6 | 436 | 13:16 | 30-130 | 52.6 |
| 339 | 11:39 | 30-130 | 56.3 | 388 | 12:28 | 30-130 | 54.6 | 437 | 13:17 | 30-130 | 53.6 |
| 340 | 11:40 | 30-130 | 54.3 | 389 | 12:29 | 30-130 | 52.6 | 438 | 13:18 | 30-130 | 54.2 |
| 341 | 11:41 | 30-130 | 54.3 | 390 | 12:30 | 30-130 | 53.5 | 439 | 13:19 | 30-130 | 53.1 |
| 342 | 11:42 | 30-130 | 53.3 | 391 | 12:31 | 30-130 | 52.6 | 440 | 13:20 | 30-130 | 54.6 |
| 343 | 11:43 | 30-130 | 53.2 | 392 | 12:32 | 30-130 | 53.6 | 441 | 13:21 | 30-130 | 52.6 |

# BHARAT PETROLEUM CORPORATION LIMITED, BINA-M.P.

## NOISE MONITORING REPORT INSIDE GREEN BELT AREA

**Location-Tower No.3 Date-23/08/2023 July 2023 TO September 2023**

| NOISE MONITORING FOR DAY TIME (06:00 AM to 10:00 PM) | | | | | | | | | | | |
|---|---|---|---|---|---|---|---|---|---|---|---|
| Record No. | Time hh:mm | Range dB | Reading dB A | Record No. | Time hh:mm | Range dB | Reading dB A | Record No. | Time hh:mm | Range dB | Reading dB A |
| 442 | 13:22 | 30-130 | 52.3 | 491 | 14:11 | 30-130 | 53.6 | 540 | 15:00 | 30-130 | 52.3 |
| 443 | 13:23 | 30-130 | 53.4 | 492 | 14:12 | 30-130 | 54.6 | 541 | 15:01 | 30-130 | 53.6 |
| 444 | 13:24 | 30-130 | 52.6 | 493 | 14:13 | 30-130 | 52.9 | 542 | 15:02 | 30-130 | 52.6 |
| 445 | 13:25 | 30-130 | 54.6 | 494 | 14:14 | 30-130 | 53.9 | 543 | 15:03 | 30-130 | 54.3 |
| 446 | 13:26 | 30-130 | 53.1 | 495 | 14:15 | 30-130 | 54.6 | 544 | 15:04 | 30-130 | 52.3 |
| 447 | 13:27 | 30-130 | 52.6 | 496 | 14:16 | 30-130 | 52.0 | 545 | 15:05 | 30-130 | 52.3 |
| 448 | 13:28 | 30-130 | 53.4 | 497 | 14:17 | 30-130 | 52.9 | 546 | 15:06 | 30-130 | 52.3 |
| 449 | 13:29 | 30-130 | 53.4 | 498 | 14:18 | 30-130 | 53.1 | 547 | 15:07 | 30-130 | 52.3 |
| 450 | 13:30 | 30-130 | 52.6 | 499 | 14:19 | 30-130 | 54.2 | 548 | 15:08 | 30-130 | 52.3 |
| 451 | 13:31 | 30-130 | 52.9 | 500 | 14:20 | 30-130 | 52.3 | 549 | 15:09 | 30-130 | 53.6 |
| 452 | 13:32 | 30-130 | 52.6 | 501 | 14:21 | 30-130 | 53.4 | 550 | 15:10 | 30-130 | 54.6 |
| 453 | 13:33 | 30-130 | 53.4 | 502 | 14:22 | 30-130 | 52.9 | 551 | 15:11 | 30-130 | 52.3 |
| 454 | 13:34 | 30-130 | 52.6 | 503 | 14:23 | 30-130 | 52.9 | 552 | 15:12 | 30-130 | 53.2 |
| 455 | 13:35 | 30-130 | 53.1 | 504 | 14:24 | 30-130 | 53.6 | 553 | 15:13 | 30-130 | 54.2 |
| 456 | 13:36 | 30-130 | 58.6 | 505 | 14:25 | 30-130 | 52.6 | 554 | 15:14 | 30-130 | 52.9 |
| 457 | 13:37 | 30-130 | 52.6 | 506 | 14:26 | 30-130 | 52.6 | 555 | 15:15 | 30-130 | 53.6 |
| 458 | 13:38 | 30-130 | 53.4 | 507 | 14:27 | 30-130 | 52.9 | 556 | 15:16 | 30-130 | 52.4 |
| 459 | 13:39 | 30-130 | 52.6 | 508 | 14:28 | 30-130 | 53.9 | 557 | 15:17 | 30-130 | 53.4 |
| 460 | 13:40 | 30-130 | 53.5 | 509 | 14:29 | 30-130 | 52.9 | 558 | 15:18 | 30-130 | 54.6 |
| 461 | 13:41 | 30-130 | 52.2 | 510 | 14:30 | 30-130 | 52.9 | 559 | 15:19 | 30-130 | 52.6 |
| 462 | 13:42 | 30-130 | 53.4 | 511 | 14:31 | 30-130 | 53.6 | 560 | 15:20 | 30-130 | 53.2 |
| 463 | 13:43 | 30-130 | 52.6 | 512 | 14:32 | 30-130 | 52.6 | 561 | 15:21 | 30-130 | 52.6 |
| 464 | 13:44 | 30-130 | 53.4 | 513 | 14:33 | 30-130 | 52.4 | 562 | 15:22 | 30-130 | 53.6 |
| 465 | 13:45 | 30-130 | 52.6 | 514 | 14:34 | 30-130 | 52.6 | 563 | 15:23 | 30-130 | 52.6 |
| 466 | 13:46 | 30-130 | 53.1 | 515 | 14:35 | 30-130 | 53.5 | 564 | 15:24 | 30-130 | 54.0 |
| 467 | 13:47 | 30-130 | 52.2 | 516 | 14:36 | 30-130 | 53.9 | 565 | 15:25 | 30-130 | 53.6 |
| 468 | 13:48 | 30-130 | 53.2 | 517 | 14:37 | 30-130 | 52.9 | 566 | 15:26 | 30-130 | 52.6 |
| 469 | 13:49 | 30-130 | 52.3 | 518 | 14:38 | 30-130 | 54.6 | 567 | 15:27 | 30-130 | 53.4 |
| 470 | 13:50 | 30-130 | 53.2 | 519 | 14:39 | 30-130 | 52.9 | 568 | 15:28 | 30-130 | 52.6 |
| 471 | 13:51 | 30-130 | 52.3 | 520 | 14:40 | 30-130 | 52.9 | 569 | 15:29 | 30-130 | 53.4 |
| 472 | 13:52 | 30-130 | 54.1 | 521 | 14:41 | 30-130 | 53.6 | 570 | 15:30 | 30-130 | 54.2 |
| 473 | 13:53 | 30-130 | 53.3 | 522 | 14:42 | 30-130 | 52.9 | 571 | 15:31 | 30-130 | 52.3 |
| 474 | 13:54 | 30-130 | 53.2 | 523 | 14:43 | 30-130 | 52.6 | 572 | 15:32 | 30-130 | 53.4 |
| 475 | 13:55 | 30-130 | 53.6 | 524 | 14:44 | 30-130 | 53.9 | 573 | 15:33 | 30-130 | 52.6 |
| 476 | 13:56 | 30-130 | 52.4 | 525 | 14:45 | 30-130 | 52.7 | 574 | 15:34 | 30-130 | 52.3 |
| 477 | 13:57 | 30-130 | 54.6 | 526 | 14:46 | 30-130 | 53.0 | 575 | 15:35 | 30-130 | 53.1 |
| 478 | 13:58 | 30-130 | 52.4 | 527 | 14:47 | 30-130 | 54.9 | 576 | 15:36 | 30-130 | 52.3 |
| 479 | 13:59 | 30-130 | 52.8 | 528 | 14:48 | 30-130 | 55.1 | 577 | 15:37 | 30-130 | 53.6 |
| 480 | 14:00 | 30-130 | 52.0 | 529 | 14:49 | 30-130 | 54.6 | 578 | 15:38 | 30-130 | 54.6 |
| 481 | 14:01 | 30-130 | 52.4 | 530 | 14:50 | 30-130 | 52.9 | 579 | 15:39 | 30-130 | 53.4 |
| 482 | 14:02 | 30-130 | 54.6 | 531 | 14:51 | 30-130 | 54.6 | 580 | 15:40 | 30-130 | 52.4 |
| 483 | 14:03 | 30-130 | 52.3 | 532 | 14:52 | 30-130 | 54.6 | 581 | 15:41 | 30-130 | 53.4 |
| 484 | 14:04 | 30-130 | 52.4 | 533 | 14:53 | 30-130 | 52.9 | 582 | 15:42 | 30-130 | 52.4 |
| 485 | 14:05 | 30-130 | 52.4 | 534 | 14:54 | 30-130 | 52.6 | 583 | 15:43 | 30-130 | 52.1 |
| 486 | 14:06 | 30-130 | 52.2 | 535 | 14:55 | 30-130 | 54.6 | 584 | 15:44 | 30-130 | 53.4 |
| 487 | 14:07 | 30-130 | 53.6 | 536 | 14:56 | 30-130 | 52.9 | 585 | 15:45 | 30-130 | 52.9 |
| 488 | 14:08 | 30-130 | 54.1 | 537 | 14:57 | 30-130 | 53.6 | 586 | 15:46 | 30-130 | 53.4 |
| 489 | 14:09 | 30-130 | 52.6 | 538 | 14:58 | 30-130 | 53.0 | 587 | 15:47 | 30-130 | 53.8 |
| 490 | 14:10 | 30-130 | 52.6 | 539 | 14:59 | 30-130 | 52.2 | 588 | 15:48 | 30-130 | 52.6 |

# BHARAT PETROLEUM CORPORATION LIMITED, BINA-M.P.

## NOISE MONITORING REPORT INSIDE GREEN BELT AREA

**Location-Tower No.3 Date-23/08/2023 July 2023 TO September 2023**

| NOISE MONITORING FOR DAY TIME (06:00 AM to 10:00 PM) | | | | | | | | | | | |
|---|---|---|---|---|---|---|---|---|---|---|---|
| Record No. | Time hh:mm | Range dB | Reading dB A | Record No. | Time hh:mm | Range dB | Reading dB A | Record No. | Time hh:mm | Range dB | Reading dB A |
| 589 | 15:49 | 30-130 | 54.9 | 638 | 16:38 | 30-130 | 55.6 | 687 | 17:27 | 30-130 | 52.6 |
| 590 | 15:50 | 30-130 | 53.6 | 639 | 16:39 | 30-130 | 52.6 | 688 | 17:28 | 30-130 | 51.2 |
| 591 | 15:51 | 30-130 | 52.6 | 640 | 16:40 | 30-130 | 53.9 | 689 | 17:29 | 30-130 | 53.2 |
| 592 | 15:52 | 30-130 | 52.3 | 641 | 16:41 | 30-130 | 52.3 | 690 | 17:30 | 30-130 | 52.6 |
| 593 | 15:53 | 30-130 | 53.1 | 642 | 16:42 | 30-130 | 53.2 | 691 | 17:31 | 30-130 | 51.2 |
| 594 | 15:54 | 30-130 | 53.9 | 643 | 16:43 | 30-130 | 52.3 | 692 | 17:32 | 30-130 | 53.2 |
| 595 | 15:55 | 30-130 | 52.9 | 644 | 16:44 | 30-130 | 49.1 | 693 | 17:33 | 30-130 | 52.2 |
| 596 | 15:56 | 30-130 | 53.4 | 645 | 16:45 | 30-130 | 49.3 | 694 | 17:34 | 30-130 | 52.3 |
| 597 | 15:57 | 30-130 | 54.6 | 646 | 16:46 | 30-130 | 53.2 | 695 | 17:35 | 30-130 | 53.2 |
| 598 | 15:58 | 30-130 | 53.4 | 647 | 16:47 | 30-130 | 53.6 | 696 | 17:36 | 30-130 | 52.3 |
| 599 | 15:59 | 30-130 | 52.9 | 648 | 16:48 | 30-130 | 52.4 | 697 | 17:37 | 30-130 | 51.2 |
| 600 | 16:00 | 30-130 | 52.6 | 649 | 16:49 | 30-130 | 51.6 | 698 | 17:38 | 30-130 | 52.3 |
| 601 | 16:01 | 30-130 | 52.6 | 650 | 16:50 | 30-130 | 52.4 | 699 | 17:39 | 30-130 | 52.4 |
| 602 | 16:02 | 30-130 | 51.9 | 651 | 16:51 | 30-130 | 53.7 | 700 | 17:40 | 30-130 | 53.6 |
| 603 | 16:03 | 30-130 | 52.3 | 652 | 16:52 | 30-130 | 51.6 | 701 | 17:41 | 30-130 | 51.6 |
| 604 | 16:04 | 30-130 | 52.4 | 653 | 16:53 | 30-130 | 52.6 | 702 | 17:42 | 30-130 | 52.3 |
| 605 | 16:05 | 30-130 | 52.7 | 654 | 16:54 | 30-130 | 53.4 | 703 | 17:43 | 30-130 | 53.2 |
| 606 | 16:06 | 30-130 | 53.4 | 655 | 16:55 | 30-130 | 51.6 | 704 | 17:44 | 30-130 | 51.6 |
| 607 | 16:07 | 30-130 | 52.9 | 656 | 16:56 | 30-130 | 52.6 | 705 | 17:45 | 30-130 | 52.6 |
| 608 | 16:08 | 30-130 | 53.9 | 657 | 16:57 | 30-130 | 52.9 | 706 | 17:46 | 30-130 | 53.6 |
| 609 | 16:09 | 30-130 | 51.9 | 658 | 16:58 | 30-130 | 51.6 | 707 | 17:47 | 30-130 | 51.6 |
| 610 | 16:10 | 30-130 | 52.3 | 659 | 16:59 | 30-130 | 52.6 | 708 | 17:48 | 30-130 | 51.6 |
| 611 | 16:11 | 30-130 | 53.2 | 660 | 17:00 | 30-130 | 52.6 | 709 | 17:49 | 30-130 | 52.6 |
| 612 | 16:12 | 30-130 | 52.6 | 661 | 17:01 | 30-130 | 52.6 | 710 | 17:50 | 30-130 | 53.2 |
| 613 | 16:13 | 30-130 | 53.1 | 662 | 17:02 | 30-130 | 53.5 | 711 | 17:51 | 30-130 | 52.6 |
| 614 | 16:14 | 30-130 | 52.6 | 663 | 17:03 | 30-130 | 51.5 | 712 | 17:52 | 30-130 | 51.6 |
| 615 | 16:15 | 30-130 | 52.6 | 664 | 17:04 | 30-130 | 52.6 | 713 | 17:53 | 30-130 | 55.6 |
| 616 | 16:16 | 30-130 | 53.4 | 665 | 17:05 | 30-130 | 52.6 | 714 | 17:54 | 30-130 | 53.6 |
| 617 | 16:17 | 30-130 | 52.6 | 666 | 17:06 | 30-130 | 53.4 | 715 | 17:55 | 30-130 | 51.6 |
| 618 | 16:18 | 30-130 | 53.6 | 667 | 17:07 | 30-130 | 52.6 | 716 | 17:56 | 30-130 | 52.3 |
| 619 | 16:19 | 30-130 | 52.6 | 668 | 17:08 | 30-130 | 52.6 | 717 | 17:57 | 30-130 | 51.6 |
| 620 | 16:20 | 30-130 | 53.4 | 669 | 17:09 | 30-130 | 53.4 | 718 | 17:58 | 30-130 | 51.5 |
| 621 | 16:21 | 30-130 | 52.9 | 670 | 17:10 | 30-130 | 52.6 | 719 | 17:59 | 30-130 | 55.6 |
| 622 | 16:22 | 30-130 | 51.6 | 671 | 17:11 | 30-130 | 52.5 | 720 | 18:00 | 30-130 | 52.6 |
| 623 | 16:23 | 30-130 | 52.3 | 672 | 17:12 | 30-130 | 51.6 | 721 | 18:01 | 30-130 | 51.9 |
| 624 | 16:24 | 30-130 | 53.2 | 673 | 17:13 | 30-130 | 55.3 | 722 | 18:02 | 30-130 | 53.6 |
| 625 | 16:25 | 30-130 | 52.3 | 674 | 17:14 | 30-130 | 53.5 | 723 | 18:03 | 30-130 | 51.5 |
| 626 | 16:26 | 30-130 | 49.1 | 675 | 17:15 | 30-130 | 53.8 | 724 | 18:04 | 30-130 | 52.6 |
| 627 | 16:27 | 30-130 | 49.3 | 676 | 17:16 | 30-130 | 51.0 | 725 | 18:05 | 30-130 | 52.6 |
| 628 | 16:28 | 30-130 | 53.2 | 677 | 17:17 | 30-130 | 52.6 | 726 | 18:06 | 30-130 | 52.9 |
| 629 | 16:29 | 30-130 | 53.6 | 678 | 17:18 | 30-130 | 52.0 | 727 | 18:07 | 30-130 | 54.0 |
| 630 | 16:30 | 30-130 | 52.4 | 679 | 17:19 | 30-130 | 53.5 | 728 | 18:08 | 30-130 | 51.6 |
| 631 | 16:31 | 30-130 | 51.6 | 680 | 17:20 | 30-130 | 51.6 | 729 | 18:09 | 30-130 | 52.9 |
| 632 | 16:32 | 30-130 | 52.4 | 681 | 17:21 | 30-130 | 53.4 | 730 | 18:10 | 30-130 | 53.6 |
| 633 | 16:33 | 30-130 | 51.0 | 682 | 17:22 | 30-130 | 52.6 | 731 | 18:11 | 30-130 | 51.9 |
| 634 | 16:34 | 30-130 | 51.8 | 683 | 17:23 | 30-130 | 53.4 | 732 | 18:12 | 30-130 | 55.9 |
| 635 | 16:35 | 30-130 | 55.6 | 684 | 17:24 | 30-130 | 51.2 | 733 | 18:13 | 30-130 | 55.9 |
| 636 | 16:36 | 30-130 | 52.2 | 685 | 17:25 | 30-130 | 53.4 | 734 | 18:14 | 30-130 | 52.6 |
| 637 | 16:37 | 30-130 | 51.9 | 686 | 17:26 | 30-130 | 52.6 | 735 | 18:15 | 30-130 | 51.9 |

# BHARAT PETROLEUM CORPORATION LIMITED, BINA-M.P.

## NOISE MONITORING REPORT INSIDE GREEN BELT AREA

**Location-Tower No.3 Date-23/08/2023 July 2023 TO September 2023**

| NOISE MONITORING FOR DAY TIME (06:00 AM to 10:00 PM) | | | | | | | | | | | |
|---|---|---|---|---|---|---|---|---|---|---|---|
| Record No. | Time hh:mm | Range dB | Reading dB A | Record No. | Time hh:mm | Range dB | Reading dB A | Record No. | Time hh:mm | Range dB | Reading dB A |
| 736 | 18:16 | 30-130 | 51.6 | 785 | 19:05 | 30-130 | 52.6 | 834 | 19:54 | 30-130 | 52.4 |
| 737 | 18:17 | 30-130 | 53.6 | 786 | 19:06 | 30-130 | 51.6 | 835 | 19:55 | 30-130 | 53.2 |
| 738 | 18:18 | 30-130 | 51.6 | 787 | 19:07 | 30-130 | 52.6 | 836 | 19:56 | 30-130 | 52.6 |
| 739 | 18:19 | 30-130 | 52.6 | 788 | 19:08 | 30-130 | 52.6 | 837 | 19:57 | 30-130 | 53.2 |
| 740 | 18:20 | 30-130 | 53.4 | 789 | 19:09 | 30-130 | 53.1 | 838 | 19:58 | 30-130 | 51.2 |
| 741 | 18:21 | 30-130 | 52.6 | 790 | 19:10 | 30-130 | 51.5 | 839 | 19:59 | 30-130 | 53.6 |
| 742 | 18:22 | 30-130 | 53.4 | 791 | 19:11 | 30-130 | 52.6 | 840 | 20:00 | 30-130 | 53.2 |
| 743 | 18:23 | 30-130 | 51.6 | 792 | 19:12 | 30-130 | 51.6 | 841 | 20:01 | 30-130 | 51.9 |
| 744 | 18:24 | 30-130 | 52.6 | 793 | 19:13 | 30-130 | 52.6 | 842 | 20:02 | 30-130 | 51.6 |
| 745 | 18:25 | 30-130 | 53.3 | 794 | 19:14 | 30-130 | 53.4 | 843 | 20:03 | 30-130 | 55.6 |
| 746 | 18:26 | 30-130 | 51.0 | 795 | 19:15 | 30-130 | 52.7 | 844 | 20:04 | 30-130 | 51.6 |
| 747 | 18:27 | 30-130 | 52.3 | 796 | 19:16 | 30-130 | 53.9 | 845 | 20:05 | 30-130 | 52.6 |
| 748 | 18:28 | 30-130 | 53.2 | 797 | 19:17 | 30-130 | 51.6 | 846 | 20:06 | 30-130 | 53.6 |
| 749 | 18:29 | 30-130 | 52.3 | 798 | 19:18 | 30-130 | 52.6 | 847 | 20:07 | 30-130 | 51.7 |
| 750 | 18:30 | 30-130 | 49.1 | 799 | 19:19 | 30-130 | 52.9 | 848 | 20:08 | 30-130 | 55.7 |
| 751 | 18:31 | 30-130 | 49.3 | 800 | 19:20 | 30-130 | 53.4 | 849 | 20:09 | 30-130 | 53.4 |
| 752 | 18:32 | 30-130 | 53.2 | 801 | 19:21 | 30-130 | 52.6 | 850 | 20:10 | 30-130 | 51.9 |
| 753 | 18:33 | 30-130 | 53.6 | 802 | 19:22 | 30-130 | 53.6 | 851 | 20:11 | 30-130 | 51.7 |
| 754 | 18:34 | 30-130 | 52.4 | 803 | 19:23 | 30-130 | 51.6 | 852 | 20:12 | 30-130 | 55.9 |
| 755 | 18:35 | 30-130 | 51.6 | 804 | 19:24 | 30-130 | 51.9 | 853 | 20:13 | 30-130 | 55.9 |
| 756 | 15:36 | 30-130 | 52.4 | 805 | 19:25 | 30-130 | 51.7 | 854 | 20:14 | 30-130 | 51.6 |
| 757 | 18:37 | 30-130 | 51.9 | 806 | 19:26 | 30-130 | 55.9 | 855 | 20:15 | 30-130 | 55.6 |
| 758 | 18:38 | 30-130 | 58.2 | 807 | 19:27 | 30-130 | 57.6 | 856 | 20:16 | 30-130 | 53.4 |
| 759 | 18:39 | 30-130 | 52.0 | 808 | 19:28 | 30-130 | 53.1 | 857 | 20:17 | 30-130 | 52.6 |
| 760 | 18:40 | 30-130 | 57.9 | 809 | 19:29 | 30-130 | 58.4 | 858 | 20:18 | 30-130 | 51.6 |
| 761 | 18:41 | 30-130 | 58.3 | 810 | 19:30 | 30-130 | 51.8 | 859 | 20:19 | 30-130 | 52.9 |
| 762 | 18:42 | 30-130 | 53.3 | 811 | 19:31 | 30-130 | 51.0 | 860 | 20:20 | 30-130 | 51.6 |
| 763 | 18:43 | 30-130 | 55.4 | 812 | 19:32 | 30-130 | 51.4 | 861 | 20:21 | 30-130 | 53.6 |
| 764 | 18:44 | 30-130 | 55.3 | 813 | 19:33 | 30-130 | 52.4 | 862 | 20:22 | 30-130 | 51.6 |
| 765 | 18:45 | 30-130 | 53.0 | 814 | 19:34 | 30-130 | 51.4 | 863 | 20:23 | 30-130 | 53.4 |
| 766 | 18:46 | 30-130 | 51.6 | 815 | 19:35 | 30-130 | 52.6 | 864 | 20:24 | 30-130 | 53.6 |
| 767 | 18:47 | 30-130 | 51.6 | 816 | 19:36 | 30-130 | 51.6 | 865 | 20:25 | 30-130 | 51.9 |
| 768 | 18:48 | 30-130 | 51.6 | 817 | 19:37 | 30-130 | 53.4 | 866 | 20:26 | 30-130 | 52.6 |
| 769 | 18:49 | 30-130 | 58.7 | 818 | 19:38 | 30-130 | 52.4 | 867 | 20:27 | 30-130 | 52.3 |
| 770 | 18:50 | 30-130 | 53.6 | 819 | 19:39 | 30-130 | 52.6 | 868 | 20:28 | 30-130 | 53.2 |
| 771 | 18:51 | 30-130 | 53.1 | 820 | 19:40 | 30-130 | 51.4 | 869 | 20:29 | 30-130 | 52.3 |
| 772 | 18:52 | 30-130 | 58.4 | 821 | 19:41 | 30-130 | 53.6 | 870 | 20:30 | 30-130 | 49.1 |
| 773 | 18:53 | 30-130 | 57.6 | 822 | 19:42 | 30-130 | 51.8 | 871 | 20:31 | 30-130 | 49.3 |
| 774 | 18:54 | 30-130 | 55.6 | 823 | 19:43 | 30-130 | 52.7 | 872 | 20:32 | 30-130 | 53.2 |
| 775 | 18:55 | 30-130 | 51.2 | 824 | 19:44 | 30-130 | 55.2 | 873 | 20:33 | 30-130 | 53.6 |
| 776 | 18:56 | 30-130 | 55.0 | 825 | 19:45 | 30-130 | 51.7 | 874 | 20:34 | 30-130 | 52.4 |
| 777 | 18:57 | 30-130 | 51.8 | 826 | 19:46 | 30-130 | 55.1 | 875 | 20:35 | 30-130 | 51.6 |
| 778 | 18:58 | 30-130 | 51.2 | 827 | 19:47 | 30-130 | 57.4 | 876 | 20:36 | 30-130 | 52.4 |
| 779 | 18:59 | 30-130 | 51.8 | 828 | 19:48 | 30-130 | 55.6 | 877 | 20:37 | 30-130 | 51.6 |
| 780 | 19:00 | 30-130 | 57.6 | 829 | 19:49 | 30-130 | 52.6 | 878 | 20:38 | 30-130 | 53.6 |
| 781 | 19:01 | 30-130 | 51.9 | 830 | 19:50 | 30-130 | 52.6 | 879 | 20:39 | 30-130 | 51.6 |
| 782 | 19:02 | 30-130 | 52.8 | 831 | 19:51 | 30-130 | 52.6 | 880 | 20:40 | 30-130 | 53.6 |
| 783 | 19:03 | 30-130 | 58.6 | 832 | 19:52 | 30-130 | 51.6 | 881 | 20:41 | 30-130 | 53.4 |
| 784 | 19:04 | 30-130 | 55.0 | 833 | 19:53 | 30-130 | 55.6 | 882 | 20:42 | 30-130 | 51.6 |

# BHARAT PETROLEUM CORPORATION LIMITED, BINA-M.P.

## NOISE MONITORING REPORT INSIDE GREEN BELT AREA

**Location-Tower No.3 Date-23/08/2023 July 2023 TO September 2023**

| NOISE MONITORING FOR DAY TIME (06:00 AM to 10:00 PM) | | | | | | | |
|---|---|---|---|---|---|---|---|
| Record No. | Time hh:mm | Range dB | Reading dB A | Record No. | Time hh:mm | Range dB | Reading dB A |
| 883 | 20:43 | 30-130 | 52.4 | 922 | 21:22 | 30-130 | 55.9 |
| 884 | 20:44 | 30-130 | 53.4 | 923 | 21:23 | 30-130 | 57.6 |
| 885 | 20:45 | 30-130 | 52.1 | 924 | 21:24 | 30-130 | 53.1 |
| 886 | 20:46 | 30-130 | 53.4 | 925 | 21:25 | 30-130 | 58.4 |
| 887 | 20:47 | 30-130 | 55.1 | 926 | 21:26 | 30-130 | 51.8 |
| 888 | 20:48 | 30-130 | 57.4 | 927 | 21:27 | 30-130 | 51.0 |
| 889 | 20:49 | 30-130 | 55.6 | 928 | 21:28 | 30-130 | 51.4 |
| 890 | 20:50 | 30-130 | 52.6 | 929 | 21:29 | 30-130 | 52.4 |
| 891 | 20:51 | 30-130 | 52.6 | 930 | 21:30 | 30-130 | 51.4 |
| 892 | 20:52 | 30-130 | 57.4 | 931 | 21:31 | 30-130 | 52.6 |
| 893 | 20:53 | 30-130 | 51.5 | 932 | 21:32 | 30-130 | 52.3 |
| 894 | 20:54 | 30-130 | 53.4 | 933 | 21:33 | 30-130 | 53.2 |
| 895 | 20:55 | 30-130 | 52.4 | 934 | 21:34 | 30-130 | 52.3 |
| 896 | 20:56 | 30-130 | 53.6 | 935 | 21:35 | 30-130 | 49.1 |
| 897 | 20:57 | 30-130 | 55.6 | 936 | 21:36 | 30-130 | 49.3 |
| 898 | 20:58 | 30-130 | 58.4 | 937 | 21:37 | 30-130 | 53.2 |
| 899 | 20:59 | 30-130 | 52.7 | 938 | 21:38 | 30-130 | 53.6 |
| 900 | 21:00 | 30-130 | 58.4 | 939 | 21:39 | 30-130 | 52.4 |
| 901 | 21:01 | 30-130 | 55.8 | 940 | 21:40 | 30-130 | 51.6 |
| 902 | 21:02 | 30-130 | 57.9 | 941 | 21:41 | 30-130 | 52.4 |
| 903 | 21:03 | 30-130 | 52.7 | 942 | 21:42 | 30-130 | 53.4 |
| 904 | 21:04 | 30-130 | 57.9 | 943 | 21:43 | 30-130 | 53.6 |
| 905 | 21:05 | 30-130 | 51.2 | 944 | 21:44 | 30-130 | 52.4 |
| 906 | 21:06 | 30-130 | 51.5 | 945 | 21:45 | 30-130 | 51.6 |
| 907 | 21:07 | 30-130 | 55.2 | 946 | 21:46 | 30-130 | 53.4 |
| 908 | 21:08 | 30-130 | 55.3 | 947 | 21:47 | 30-130 | 51.2 |
| 909 | 21:09 | 30-130 | 53.6 | 948 | 21:48 | 30-130 | 53.4 |
| 910 | 21:10 | 30-130 | 52.4 | 949 | 21:49 | 30-130 | 51.7 |
| 911 | 21:11 | 30-130 | 51.9 | 950 | 21:50 | 30-130 | 51.2 |
| 912 | 21:12 | 30-130 | 53.7 | 951 | 21:51 | 30-130 | 52.6 |
| 913 | 21:13 | 30-130 | 52.4 | 952 | 21:52 | 30-130 | 52.1 |
| 914 | 21:14 | 30-130 | 51.6 | 953 | 21:53 | 30-130 | 53.1 |
| 915 | 21:15 | 30-130 | 49.7 | 954 | 21:54 | 30-130 | 52.2 |
| 916 | 21:16 | 30-130 | 52.2 | 955 | 21:55 | 30-130 | 49.3 |
| 917 | 21:17 | 30-130 | 49.9 | 956 | 21:56 | 30-130 | 52.2 |
| 918 | 21:18 | 30-130 | 55.7 | 957 | 21:57 | 30-130 | 52.3 |
| 919 | 21:19 | 30-130 | 53.4 | 958 | 21:58 | 30-130 | 52.2 |
| 920 | 21:20 | 30-130 | 51.9 | 959 | 21:59 | 30-130 | 52.3 |
| 921 | 21:21 | 30-130 | 51.7 | 960 | 22:00 | 30-130 | 52.2 |

# BHARAT PETROLEUM CORPORATION LIMITED, BINA-M.P.

## NOISE MONITORING REPORT INSIDE GREEN BELT AREA

**Location-Tower No.3 Date-23/08/2023 July 2023 TO September 2023**

| NOISE MONITORING FOR NIGHT TIME (10:00 PM to 06:00 AM) | | | | | | | | | | | |
|---|---|---|---|---|---|---|---|---|---|---|---|
| Record No. | Time hh:mm | Range dB | Reading dB A | Record No. | Time hh:mm | Range dB | Reading dB A | Record No. | Time hh:mm | Range dB | Reading dB A |
| 961 | 22:01 | 30-130 | 52.3 | 1010 | 22:50 | 30-130 | 49.1 | 1059 | 23:39 | 30-130 | 51.4 |
| 962 | 22:02 | 30-130 | 53.6 | 1011 | 22:51 | 30-130 | 49.2 | 1060 | 23:40 | 30-130 | 49.3 |
| 963 | 22:03 | 30-130 | 51.3 | 1012 | 22:52 | 30-130 | 53.2 | 1061 | 23:41 | 30-130 | 49.8 |
| 964 | 22:04 | 30-130 | 51.2 | 1013 | 22:53 | 30-130 | 51.4 | 1062 | 23:42 | 30-130 | 49.6 |
| 965 | 22:05 | 30-130 | 53.2 | 1014 | 22:54 | 30-130 | 51.7 | 1063 | 23:43 | 30-130 | 49.9 |
| 966 | 22:06 | 30-130 | 52.3 | 1015 | 22:55 | 30-130 | 52.6 | 1064 | 23:44 | 30-130 | 52.1 |
| 967 | 22:07 | 30-130 | 52.6 | 1016 | 22:56 | 30-130 | 51.2 | 1065 | 23:45 | 30-130 | 52.9 |
| 968 | 22:08 | 30-130 | 52.3 | 1017 | 22:57 | 30-130 | 53.6 | 1066 | 23:46 | 30-130 | 52.3 |
| 969 | 22:09 | 30-130 | 51.2 | 1018 | 22:58 | 30-130 | 52.2 | 1067 | 23:47 | 30-130 | 53.2 |
| 970 | 22:10 | 30-130 | 51.6 | 1019 | 22:59 | 30-130 | 51.0 | 1068 | 23:48 | 30-130 | 52.3 |
| 971 | 22:11 | 30-130 | 51.4 | 1020 | 23:00 | 30-130 | 48.4 | 1069 | 23:49 | 30-130 | 49.1 |
| 972 | 22:12 | 30-130 | 51.6 | 1021 | 23:01 | 30-130 | 52.3 | 1070 | 23:50 | 30-130 | 49.3 |
| 973 | 22:13 | 30-130 | 52.3 | 1022 | 23:02 | 30-130 | 51.0 | 1071 | 23:51 | 30-130 | 53.2 |
| 974 | 22:14 | 30-130 | 53.1 | 1023 | 23:03 | 30-130 | 52.9 | 1072 | 23:52 | 30-130 | 53.6 |
| 975 | 22:15 | 30-130 | 52.3 | 1024 | 23:04 | 30-130 | 52.5 | 1073 | 23:53 | 30-130 | 52.4 |
| 976 | 22:16 | 30-130 | 53.2 | 1025 | 23:05 | 30-130 | 52.4 | 1074 | 23:54 | 30-130 | 51.6 |
| 977 | 22:17 | 30-130 | 52.1 | 1026 | 23:06 | 30-130 | 52.3 | 1075 | 23:55 | 30-130 | 52.4 |
| 978 | 22:18 | 30-130 | 51.2 | 1027 | 23:07 | 30-130 | 53.8 | 1076 | 23:56 | 30-130 | 52.3 |
| 979 | 22:19 | 30-130 | 52.2 | 1028 | 23:08 | 30-130 | 51.1 | 1077 | 23:57 | 30-130 | 49.9 |
| 980 | 22:20 | 30-130 | 51.4 | 1029 | 23:09 | 30-130 | 53.6 | 1078 | 23:58 | 30-130 | 51.0 |
| 981 | 22:21 | 30-130 | 51.6 | 1030 | 23:10 | 30-130 | 52.9 | 1079 | 23:59 | 30-130 | 51.1 |
| 982 | 22:22 | 30-130 | 52.3 | 1031 | 23:11 | 30-130 | 52.1 | 1080 | 0:00 | 30-130 | 52.2 |
| 983 | 22:23 | 30-130 | 51.6 | 1032 | 23:12 | 30-130 | 53.2 | 1081 | 0:01 | 30-130 | 52.5 |
| 984 | 22:24 | 30-130 | 52.3 | 1033 | 23:13 | 30-130 | 53.2 | 1082 | 0:02 | 30-130 | 53.8 |
| 985 | 22:25 | 30-130 | 53.2 | 1034 | 23:14 | 30-130 | 52.2 | 1083 | 0:03 | 30-130 | 51.3 |
| 986 | 22:26 | 30-130 | 52.3 | 1035 | 23:15 | 30-130 | 52.7 | 1084 | 0:04 | 30-130 | 51.6 |
| 987 | 22:27 | 30-130 | 49.1 | 1036 | 23:16 | 30-130 | 53.0 | 1085 | 0:05 | 30-130 | 53.6 |
| 988 | 22:28 | 30-130 | 49.3 | 1037 | 23:17 | 30-130 | 52.6 | 1086 | 0:06 | 30-130 | 49.0 |
| 989 | 22:29 | 30-130 | 53.2 | 1038 | 23:18 | 30-130 | 49.6 | 1087 | 0:07 | 30-130 | 49.0 |
| 990 | 22:30 | 30-130 | 53.6 | 1039 | 23:19 | 30-130 | 49.0 | 1088 | 0:08 | 30-130 | 49.7 |
| 991 | 22:31 | 30-130 | 52.4 | 1040 | 23:20 | 30-130 | 51.2 | 1089 | 0:09 | 30-130 | 49.3 |
| 992 | 22:32 | 30-130 | 51.6 | 1041 | 23:21 | 30-130 | 57.7 | 1090 | 0:10 | 30-130 | 49.9 |
| 993 | 22:33 | 30-130 | 52.4 | 1042 | 23:22 | 30-130 | 51.5 | 1091 | 0:11 | 30-130 | 48.9 |
| 994 | 22:34 | 30-130 | 49.2 | 1043 | 23:23 | 30-130 | 52.6 | 1092 | 0:12 | 30-130 | 49.5 |
| 995 | 22:35 | 30-130 | 49.3 | 1044 | 23:24 | 30-130 | 52.6 | 1093 | 0:13 | 30-130 | 49.3 |
| 996 | 22:36 | 30-130 | 51.5 | 1045 | 23:25 | 30-130 | 51.7 | 1094 | 0:14 | 30-130 | 52.8 |
| 997 | 22:37 | 30-130 | 51.6 | 1046 | 23:26 | 30-130 | 49.7 | 1095 | 0:15 | 30-130 | 51.5 |
| 998 | 22:38 | 30-130 | 52.2 | 1047 | 23:27 | 30-130 | 52.3 | 1096 | 0:16 | 30-130 | 49.6 |
| 999 | 22:39 | 30-130 | 49.2 | 1048 | 23:28 | 30-130 | 49.4 | 1097 | 0:17 | 30-130 | 49.3 |
| 1000 | 22:40 | 30-130 | 49.6 | 1049 | 23:29 | 30-130 | 58.2 | 1098 | 0:18 | 30-130 | 48.5 |
| 1001 | 22:41 | 30-130 | 52.2 | 1050 | 23:30 | 30-130 | 49.6 | 1099 | 0:19 | 30-130 | 48.9 |
| 1002 | 22:42 | 30-130 | 51.0 | 1051 | 23:31 | 30-130 | 49.1 | 1100 | 0:20 | 30-130 | 49.4 |
| 1003 | 22:43 | 30-130 | 52.2 | 1052 | 23:32 | 30-130 | 51.4 | 1101 | 0:21 | 30-130 | 49.0 |
| 1004 | 22:44 | 30-130 | 52.3 | 1053 | 23:33 | 30-130 | 51.5 | 1102 | 0:22 | 30-130 | 48.9 |
| 1005 | 22:45 | 30-130 | 51.2 | 1054 | 23:34 | 30-130 | 52.1 | 1103 | 0:23 | 30-130 | 49.9 |
| 1006 | 22:46 | 30-130 | 49.1 | 1055 | 23:35 | 30-130 | 49.1 | 1104 | 0:24 | 30-130 | 52.5 |
| 1007 | 22:47 | 30-130 | 52.2 | 1056 | 23:36 | 30-130 | 49.6 | 1105 | 0:25 | 30-130 | 52.5 |
| 1008 | 22:48 | 30-130 | 51.6 | 1057 | 23:37 | 30-130 | 49.1 | 1106 | 0:26 | 30-130 | 52.8 |
| 1009 | 22:49 | 30-130 | 49.6 | 1058 | 23:38 | 30-130 | 49.3 | 1107 | 0:27 | 30-130 | 52.3 |

# BHARAT PETROLEUM CORPORATION LIMITED, BINA-M.P.

## NOISE MONITORING REPORT INSIDE GREEN BELT AREA

## Location-Tower No.3 Date-23/08/2023 July 2023 TO September 2023

| NOISE MONITORING FOR NIGHT TIME (10:00 PM to 06:00 AM) | | | | | | | | | | | |
|---|---|---|---|---|---|---|---|---|---|---|---|
| Record No. | Time hh:mm | Range dB | Reading dB A | Record No. | Time hh:mm | Range dB | Reading dB A | Record No. | Time hh:mm | Range dB | Reading dB A |
| 1108 | 0:28 | 30-130 | 48.4 | 1157 | 1:17 | 30-130 | 49.2 | 1206 | 2:06 | 30-130 | 52.6 |
| 1109 | 0:29 | 30-130 | 49.5 | 1158 | 1:18 | 30-130 | 51.6 | 1207 | 2:07 | 30-130 | 51.2 |
| 1110 | 0:30 | 30-130 | 52.2 | 1159 | 1:19 | 30-130 | 52.3 | 1208 | 2:08 | 30-130 | 52.3 |
| 1111 | 0:31 | 30-130 | 53.8 | 1160 | 1:20 | 30-130 | 53.4 | 1209 | 2:09 | 30-130 | 49.3 |
| 1112 | 0:32 | 30-130 | 52.9 | 1161 | 1:21 | 30-130 | 51.2 | 1210 | 2:10 | 30-130 | 51.2 |
| 1113 | 0:33 | 30-130 | 52.5 | 1162 | 1:22 | 30-130 | 53.4 | 1211 | 2:11 | 30-130 | 52.3 |
| 1114 | 0:34 | 30-130 | 52.8 | 1163 | 1:23 | 30-130 | 51.0 | 1212 | 2:12 | 30-130 | 52.2 |
| 1115 | 0:35 | 30-130 | 52.1 | 1164 | 1:24 | 30-130 | 49.6 | 1213 | 2:13 | 30-130 | 53.2 |
| 1116 | 0:36 | 30-130 | 51.6 | 1165 | 1:25 | 30-130 | 52.9 | 1214 | 2:14 | 30-130 | 49.5 |
| 1117 | 0:37 | 30-130 | 52.1 | 1166 | 1:26 | 30-130 | 51.2 | 1215 | 2:15 | 30-130 | 48.2 |
| 1118 | 0:38 | 30-130 | 51.4 | 1167 | 1:27 | 30-130 | 52.3 | 1216 | 2:16 | 30-130 | 47.9 |
| 1119 | 0:39 | 30-130 | 49.8 | 1168 | 1:28 | 30-130 | 49.1 | 1217 | 2:17 | 30-130 | 48.6 |
| 1120 | 0:40 | 30-130 | 49.5 | 1169 | 1:29 | 30-130 | 51.2 | 1218 | 2:18 | 30-130 | 49.2 |
| 1121 | 0:41 | 30-130 | 49.3 | 1170 | 1:30 | 30-130 | 52.3 | 1219 | 2:19 | 30-130 | 48.3 |
| 1122 | 0:42 | 30-130 | 49.6 | 1171 | 1:31 | 30-130 | 49.8 | 1220 | 2:20 | 30-130 | 48.2 |
| 1123 | 0:43 | 30-130 | 51.0 | 1172 | 1:32 | 30-130 | 52.2 | 1221 | 2:21 | 30-130 | 48.5 |
| 1124 | 0:44 | 30-130 | 49.4 | 1173 | 1:33 | 30-130 | 52.3 | 1222 | 2:22 | 30-130 | 48.2 |
| 1125 | 0:45 | 30-130 | 49.5 | 1174 | 1:34 | 30-130 | 49.1 | 1223 | 2:23 | 30-130 | 48.3 |
| 1126 | 0:46 | 30-130 | 49.8 | 1175 | 1:35 | 30-130 | 52.3 | 1224 | 2:24 | 30-130 | 49.6 |
| 1127 | 0:47 | 30-130 | 51.4 | 1176 | 1:36 | 30-130 | 51.2 | 1225 | 2:25 | 30-130 | 48.5 |
| 1128 | 0:48 | 30-130 | 51.1 | 1177 | 1:37 | 30-130 | 51.2 | 1226 | 2:26 | 30-130 | 48.2 |
| 1129 | 0:49 | 30-130 | 51.0 | 1178 | 1:38 | 30-130 | 53.1 | 1227 | 2:27 | 30-130 | 49.6 |
| 1130 | 0:50 | 30-130 | 49.6 | 1179 | 1:39 | 30-130 | 49.6 | 1228 | 2:28 | 30-130 | 48.6 |
| 1131 | 0:51 | 30-130 | 49.0 | 1180 | 1:40 | 30-130 | 55.7 | 1229 | 2:29 | 30-130 | 48.9 |
| 1132 | 0:52 | 30-130 | 49.1 | 1181 | 1:41 | 30-130 | 49.1 | 1230 | 2:30 | 30-130 | 49.6 |
| 1133 | 0:53 | 30-130 | 51.7 | 1182 | 1:42 | 30-130 | 49.0 | 1231 | 2:31 | 30-130 | 48.8 |
| 1134 | 0:54 | 30-130 | 49.5 | 1183 | 1:43 | 30-130 | 49.0 | 1232 | 2:32 | 30-130 | 48.9 |
| 1135 | 0:55 | 30-130 | 53.4 | 1184 | 1:44 | 30-130 | 52.7 | 1233 | 2:33 | 30-130 | 48.2 |
| 1136 | 0:56 | 30-130 | 49.5 | 1185 | 1:45 | 30-130 | 47.5 | 1234 | 2:34 | 30-130 | 49.9 |
| 1137 | 0:57 | 30-130 | 49.0 | 1186 | 1:46 | 30-130 | 48.8 | 1235 | 2:35 | 30-130 | 49.5 |
| 1138 | 0:58 | 30-130 | 51.2 | 1187 | 1:47 | 30-130 | 52.5 | 1236 | 2:36 | 30-130 | 48.2 |
| 1139 | 0:59 | 30-130 | 49.8 | 1188 | 1:48 | 30-130 | 49.1 | 1237 | 2:37 | 30-130 | 48.2 |
| 1140 | 1:00 | 30-130 | 49.6 | 1189 | 1:49 | 30-130 | 48.0 | 1238 | 2:38 | 30-130 | 49.6 |
| 1141 | 1:01 | 30-130 | 51.0 | 1190 | 1:50 | 30-130 | 49.9 | 1239 | 2:39 | 30-130 | 48.3 |
| 1142 | 1:02 | 30-130 | 49.5 | 1191 | 1:51 | 30-130 | 48.9 | 1240 | 2:40 | 30-130 | 48.2 |
| 1143 | 1:03 | 30-130 | 49.8 | 1192 | 1:52 | 30-130 | 47.8 | 1241 | 2:41 | 30-130 | 49.5 |
| 1144 | 1:04 | 30-130 | 49.5 | 1193 | 1:53 | 30-130 | 48.2 | 1242 | 2:42 | 30-130 | 49.5 |
| 1145 | 1:05 | 30-130 | 49.6 | 1194 | 1:54 | 30-130 | 49.1 | 1243 | 2:43 | 30-130 | 48.9 |
| 1146 | 1:06 | 30-130 | 49.7 | 1195 | 1:55 | 30-130 | 47.9 | 1244 | 2:44 | 30-130 | 49.6 |
| 1147 | 1:07 | 30-130 | 49.4 | 1196 | 1:56 | 30-130 | 48.3 | 1245 | 2:45 | 30-130 | 49.5 |
| 1148 | 1:08 | 30-130 | 49.9 | 1197 | 1:57 | 30-130 | 48.1 | 1246 | 2:46 | 30-130 | 49.2 |
| 1149 | 1:09 | 30-130 | 51.0 | 1198 | 1:58 | 30-130 | 47.6 | 1247 | 2:47 | 30-130 | 48.2 |
| 1150 | 1:10 | 30-130 | 52.8 | 1199 | 1:59 | 30-130 | 48.2 | 1248 | 2:48 | 30-130 | 49.6 |
| 1151 | 1:11 | 30-130 | 52.6 | 1200 | 2:00 | 30-130 | 47.6 | 1249 | 2:49 | 30-130 | 49.6 |
| 1152 | 1:12 | 30-130 | 51.2 | 1201 | 2:01 | 30-130 | 48.3 | 1250 | 2:50 | 30-130 | 51.2 |
| 1153 | 1:13 | 30-130 | 49.3 | 1202 | 2:02 | 30-130 | 49.2 | 1251 | 2:51 | 30-130 | 52.3 |
| 1154 | 1:14 | 30-130 | 51.2 | 1203 | 2:03 | 30-130 | 49.3 | 1252 | 2:52 | 30-130 | 51.6 |
| 1155 | 1:15 | 30-130 | 49.8 | 1204 | 2:04 | 30-130 | 52.2 | 1253 | 2:53 | 30-130 | 53.1 |
| 1156 | 1:16 | 30-130 | 49.5 | 1205 | 2:05 | 30-130 | 48.9 | 1254 | 2:54 | 30-130 | 52.4 |

# BHARAT PETROLEUM CORPORATION LIMITED, BINA-M.P.

## NOISE MONITORING REPORT INSIDE GREEN BELT AREA

**Location-Tower No.3 Date-23/08/2023 July 2023 TO September 2023**

| NOISE MONITORING FOR NIGHT TIME (10:00 PM to 06:00 AM) | | | | | | | | | | | |
|---|---|---|---|---|---|---|---|---|---|---|---|
| Record No. | Time hh:mm | Range dB | Reading dB A | Record No. | Time hh:mm | Range dB | Reading dB A | Record No. | Time hh:mm | Range dB | Reading dB A |
| 1255 | 2:55 | 30-130 | 52.3 | 1304 | 3:44 | 30-130 | 49.5 | 1353 | 4:33 | 30-130 | 48.9 |
| 1256 | 2:56 | 30-130 | 51.2 | 1305 | 3:45 | 30-130 | 48.5 | 1354 | 4:34 | 30-130 | 49.1 |
| 1257 | 2:57 | 30-130 | 52.3 | 1306 | 3:46 | 30-130 | 49.1 | 1355 | 4:35 | 30-130 | 48.6 |
| 1258 | 2:58 | 30-130 | 52.6 | 1307 | 3:47 | 30-130 | 48.9 | 1356 | 4:36 | 30-130 | 48.6 |
| 1259 | 2:59 | 30-130 | 53.2 | 1308 | 3:48 | 30-130 | 49.5 | 1357 | 4:37 | 30-130 | 48.9 |
| 1260 | 3:00 | 30-130 | 51.6 | 1309 | 3:49 | 30-130 | 49.5 | 1358 | 4:38 | 30-130 | 49.5 |
| 1261 | 3:01 | 30-130 | 52.6 | 1310 | 3:50 | 30-130 | 47.9 | 1359 | 4:39 | 30-130 | 48.6 |
| 1262 | 3:02 | 30-130 | 52.0 | 1311 | 3:51 | 30-130 | 48.2 | 1360 | 4:40 | 30-130 | 48.9 |
| 1263 | 3:03 | 30-130 | 51.6 | 1312 | 3:52 | 30-130 | 49.5 | 1361 | 4:41 | 30-130 | 49.9 |
| 1264 | 3:04 | 30-130 | 52.6 | 1313 | 3:53 | 30-130 | 48.9 | 1362 | 4:42 | 30-130 | 49.1 |
| 1265 | 3:05 | 30-130 | 51.2 | 1314 | 3:54 | 30-130 | 49.2 | 1363 | 4:43 | 30-130 | 51.2 |
| 1266 | 3:06 | 30-130 | 49.9 | 1315 | 3:55 | 30-130 | 49.5 | 1364 | 4:44 | 30-130 | 48.7 |
| 1267 | 3:07 | 30-130 | 52.6 | 1316 | 3:56 | 30-130 | 49.5 | 1365 | 4:46 | 30-130 | 48.9 |
| 1268 | 3:08 | 30-130 | 52.0 | 1317 | 3:57 | 30-130 | 48.9 | 1366 | 4:47 | 30-130 | 49.9 |
| 1269 | 3:09 | 30-130 | 51.6 | 1318 | 3:58 | 30-130 | 49.5 | 1367 | 4:48 | 30-130 | 49.2 |
| 1270 | 3:10 | 30-130 | 49.6 | 1319 | 3:59 | 30-130 | 48.9 | 1368 | 4:49 | 30-130 | 49.5 |
| 1271 | 3:11 | 30-130 | 52.6 | 1320 | 4:00 | 30-130 | 48.8 | 1369 | 4:50 | 30-130 | 49.6 |
| 1272 | 3:12 | 30-130 | 51.6 | 1321 | 4:01 | 30-130 | 48.9 | 1370 | 4:51 | 30-130 | 49.6 |
| 1273 | 3:13 | 30-130 | 52.6 | 1322 | 4:02 | 30-130 | 49.5 | 1371 | 4:52 | 30-130 | 48.9 |
| 1274 | 3:14 | 30-130 | 51.6 | 1323 | 4:03 | 30-130 | 49.1 | 1372 | 4:53 | 30-130 | 49.9 |
| 1275 | 3:15 | 30-130 | 49.6 | 1324 | 4:04 | 30-130 | 51.6 | 1373 | 4:54 | 30-130 | 50.6 |
| 1276 | 3:16 | 30-130 | 49.7 | 1325 | 4:05 | 30-130 | 52.1 | 1374 | 4:55 | 30-130 | 48.4 |
| 1277 | 3:17 | 30-130 | 48.9 | 1326 | 4:06 | 30-130 | 53.4 | 1375 | 4:55 | 30-130 | 48.0 |
| 1278 | 3:18 | 30-130 | 48.8 | 1327 | 4:07 | 30-130 | 52.6 | 1376 | 4:56 | 30-130 | 51.6 |
| 1279 | 3:19 | 30-130 | 48.9 | 1328 | 4:08 | 30-130 | 49.1 | 1377 | 4:57 | 30-130 | 48.8 |
| 1280 | 3:20 | 30-130 | 49.5 | 1329 | 4:09 | 30-130 | 49.1 | 1378 | 4:58 | 30-130 | 48.7 |
| 1281 | 3:21 | 30-130 | 49.6 | 1330 | 4:10 | 30-130 | 48.6 | 1379 | 4:59 | 30-130 | 48.1 |
| 1282 | 3:22 | 30-130 | 52.2 | 1331 | 4:11 | 30-130 | 48.9 | 1380 | 5:00 | 30-130 | 48.2 |
| 1283 | 3:23 | 30-130 | 49.1 | 1332 | 4:12 | 30-130 | 49.5 | 1381 | 5:01 | 30-130 | 51.8 |
| 1284 | 3:24 | 30-130 | 49.8 | 1333 | 4:13 | 30-130 | 48.9 | 1382 | 5:02 | 30-130 | 52.1 |
| 1285 | 3:25 | 30-130 | 49.5 | 1334 | 4:14 | 30-130 | 49.5 | 1383 | 5:03 | 30-130 | 52.2 |
| 1286 | 3:26 | 30-130 | 49.9 | 1335 | 4:15 | 30-130 | 48.5 | 1384 | 5:04 | 30-130 | 51.9 |
| 1287 | 3:27 | 30-130 | 49.6 | 1336 | 4:16 | 30-130 | 48.8 | 1385 | 5:05 | 30-130 | 51.5 |
| 1288 | 3:28 | 30-130 | 51.9 | 1337 | 4:17 | 30-130 | 49.5 | 1386 | 5:06 | 30-130 | 52.1 |
| 1289 | 3:29 | 30-130 | 51.6 | 1338 | 4:18 | 30-130 | 48.7 | 1387 | 5:07 | 30-130 | 51.5 |
| 1290 | 3:30 | 30-130 | 49.6 | 1339 | 4:19 | 30-130 | 49.5 | 1388 | 5:08 | 30-130 | 52.1 |
| 1291 | 3:31 | 30-130 | 49.6 | 1340 | 4:20 | 30-130 | 49.9 | 1389 | 5:09 | 30-130 | 52.1 |
| 1292 | 3:32 | 30-130 | 49.7 | 1341 | 4:21 | 30-130 | 51.7 | 1390 | 5:10 | 30-130 | 52.4 |
| 1293 | 3:33 | 30-130 | 49.6 | 1342 | 4:22 | 30-130 | 52.1 | 1391 | 5:11 | 30-130 | 51.9 |
| 1294 | 3:34 | 30-130 | 49.0 | 1343 | 4:23 | 30-130 | 53.4 | 1392 | 5:12 | 30-130 | 52.2 |
| 1295 | 3:35 | 30-130 | 49.5 | 1344 | 4:24 | 30-130 | 51.6 | 1393 | 5:13 | 30-130 | 51.7 |
| 1296 | 3:36 | 30-130 | 49.8 | 1345 | 4:25 | 30-130 | 52.3 | 1394 | 5:14 | 30-130 | 51.7 |
| 1297 | 3:37 | 30-130 | 49.7 | 1346 | 4:26 | 30-130 | 52.2 | 1395 | 5:15 | 30-130 | 51.6 |
| 1298 | 3:38 | 30-130 | 48.9 | 1347 | 4:27 | 30-130 | 53.5 | 1396 | 5:16 | 30-130 | 51.6 |
| 1299 | 3:39 | 30-130 | 47.5 | 1348 | 4:28 | 30-130 | 52.1 | 1397 | 5:17 | 30-130 | 51.8 |
| 1300 | 3:40 | 30-130 | 48.8 | 1349 | 4:29 | 30-130 | 52.3 | 1398 | 5:18 | 30-130 | 51.8 |
| 1301 | 3:41 | 30-130 | 47.9 | 1350 | 4:30 | 30-130 | 49.2 | 1399 | 5:19 | 30-130 | 51.9 |
| 1302 | 3:42 | 30-130 | 49.7 | 1351 | 4:31 | 30-130 | 51.7 | 1400 | 5:20 | 30-130 | 51.9 |
| 1303 | 3:43 | 30-130 | 49.8 | 1352 | 4:32 | 30-130 | 49.9 | 1401 | 5:21 | 30-130 | 52.3 |

# BHARAT PETROLEUM CORPORATION LIMITED, BINA-M.P.

## NOISE MONITORING REPORT INSIDE GREEN BELT AREA

**Location-Tower No.3 Date-23/08/2023 July 2023 TO September 2023**

| NOISE MONITORING FOR NIGHT TIME (10:00 PM to 06:00 AM) | | | |
|---|---|---|---|
| Record No. | Time hh:mm | Range dB | Reading dB A |
| 1402 | 5:22 | 30-130 | 51.5 |
| 1403 | 5:23 | 30-130 | 52.1 |
| 1404 | 5:24 | 30-130 | 51.9 |
| 1405 | 5:25 | 30-130 | 51.8 |
| 1406 | 5:26 | 30-130 | 51.8 |
| 1407 | 5:27 | 30-130 | 52.2 |
| 1408 | 5:28 | 30-130 | 51.9 |
| 1409 | 5:29 | 30-130 | 51.9 |
| 1410 | 5:30 | 30-130 | 52.2 |
| 1411 | 5:31 | 30-130 | 52.1 |
| 1412 | 5:32 | 30-130 | 51.9 |
| 1413 | 5:33 | 30-130 | 52.2 |
| 1414 | 5:34 | 30-130 | 51.8 |
| 1415 | 5:35 | 30-130 | 52.0 |
| 1416 | 5:36 | 30-130 | 52.0 |
| 1417 | 5:37 | 30-130 | 51.9 |
| 1418 | 5:38 | 30-130 | 51.7 |
| 1419 | 5:39 | 30-130 | 51.9 |
| 1420 | 5:40 | 30-130 | 51.6 |
| 1421 | 5:41 | 30-130 | 52.0 |
| 1422 | 5:42 | 30-130 | 52.2 |
| 1423 | 5:43 | 30-130 | 51.6 |
| 1424 | 5:44 | 30-130 | 51.5 |
| 1425 | 5:45 | 30-130 | 52.2 |
| 1426 | 4:46 | 30-130 | 51.6 |
| 1427 | 5:47 | 30-130 | 51.9 |
| 1428 | 5:48 | 30-130 | 52.0 |
| 1429 | 5:49 | 30-130 | 52.3 |
| 1430 | 5:50 | 30-130 | 52.4 |
| 1431 | 5:51 | 30-130 | 52.3 |
| 1432 | 5:52 | 30-130 | 51.9 |
| 1433 | 5:53 | 30-130 | 51.6 |
| 1434 | 5:54 | 30-130 | 51.5 |
| 1435 | 5:55 | 30-130 | 52.0 |
| 1436 | 5:56 | 30-130 | 52.1 |
| 1437 | 5:57 | 30-130 | 52.3 |
| 1438 | 5:58 | 30-130 | 52.4 |
| 1439 | 5:59 | 30-130 | 51.8 |
| 1440 | 6:00 | 30-130 | 51.7 |

# BHARAT PETROLEUM CORPORATION LIMITED, BINA-M.P.

## NOISE MONITORING REPORT INSIDE GREEN BELT AREA

**Location-Tower No.5 Date-25/08/2023 July 2023 TO September 2023**

| NOISE MONITORING FOR DAY TIME (06:00 AM to 10:00 PM) | | | | | | | | | | | |
|---|---|---|---|---|---|---|---|---|---|---|---|
| Record No. | Time hh:mm | Range dB | Reading dB A | Record No. | Time hh:mm | Range dB | Reading dB A | Record No. | Time hh:mm | Range dB | Reading dB A |
| 1 | 6:01 | 30-130 | 53.2 | 50 | 6:50 | 30-130 | 52.6 | 99 | 7:39 | 30-130 | 52.6 |
| 2 | 6:02 | 30-130 | 54.2 | 51 | 6:51 | 30-130 | 53.2 | 100 | 7:40 | 30-130 | 54.6 |
| 3 | 6:03 | 30-130 | 52.3 | 52 | 6:52 | 30-130 | 52.6 | 101 | 7:41 | 30-130 | 56.6 |
| 4 | 6:04 | 30-130 | 53.2 | 53 | 6:53 | 30-130 | 51.6 | 102 | 7:42 | 30-130 | 52.6 |
| 5 | 6:05 | 30-130 | 54.3 | 54 | 6:54 | 30-130 | 52.6 | 103 | 7:43 | 30-130 | 52.6 |
| 6 | 6:06 | 30-130 | 54.3 | 55 | 6:55 | 30-130 | 53.2 | 104 | 7:44 | 30-130 | 53.9 |
| 7 | 6:07 | 30-130 | 52.3 | 56 | 6:56 | 30-130 | 52.3 | 105 | 7:45 | 30-130 | 54.6 |
| 8 | 6:08 | 30-130 | 52.3 | 57 | 6:57 | 30-130 | 51.3 | 106 | 7:46 | 30-130 | 54.7 |
| 9 | 6:09 | 30-130 | 53.2 | 58 | 6:58 | 30-130 | 52.3 | 107 | 7:47 | 30-130 | 54.6 |
| 10 | 6:10 | 30-130 | 52.3 | 59 | 6:59 | 30-130 | 52.3 | 108 | 7:48 | 30-130 | 55.6 |
| 11 | 6:11 | 30-130 | 52.3 | 60 | 7:00 | 30-130 | 51.5 | 109 | 7:49 | 30-130 | 54.2 |
| 12 | 6:12 | 30-130 | 51.3 | 61 | 7:01 | 30-130 | 52.4 | 110 | 7:50 | 30-130 | 54.2 |
| 13 | 6:13 | 30-130 | 52.3 | 62 | 7:02 | 30-130 | 52.6 | 111 | 7:51 | 30-130 | 53.9 |
| 14 | 6:14 | 30-130 | 53.2 | 63 | 7:03 | 30-130 | 53.2 | 112 | 7:52 | 30-130 | 54.6 |
| 15 | 6:15 | 30-130 | 51.2 | 64 | 7:04 | 30-130 | 52.6 | 113 | 7:53 | 30-130 | 54.6 |
| 16 | 6:16 | 30-130 | 52.3 | 65 | 7:05 | 30-130 | 52.6 | 114 | 7:54 | 30-130 | 54.9 |
| 17 | 6:17 | 30-130 | 53.2 | 66 | 7:06 | 30-130 | 53.6 | 115 | 7:55 | 30-130 | 54.6 |
| 18 | 6:18 | 30-130 | 51.2 | 67 | 7:07 | 30-130 | 52.6 | 116 | 7:56 | 30-130 | 54.6 |
| 19 | 6:19 | 30-130 | 51.6 | 68 | 7:08 | 30-130 | 52.6 | 117 | 7:57 | 30-130 | 54.6 |
| 20 | 6:20 | 30-130 | 52.6 | 69 | 7:09 | 30-130 | 53.9 | 118 | 7:58 | 30-130 | 52.3 |
| 21 | 6:21 | 30-130 | 50.8 | 70 | 7:10 | 30-130 | 54.5 | 119 | 7:59 | 30-130 | 53.2 |
| 22 | 6:22 | 30-130 | 49.8 | 71 | 7:11 | 30-130 | 52.6 | 120 | 8:00 | 30-130 | 51.2 |
| 23 | 6:23 | 30-130 | 50.1 | 72 | 7:12 | 30-130 | 52.6 | 121 | 8:01 | 30-130 | 52.6 |
| 24 | 6:24 | 30-130 | 52.3 | 73 | 7:13 | 30-130 | 54.7 | 122 | 8:02 | 30-130 | 53.2 |
| 25 | 6:25 | 30-130 | 52.6 | 74 | 7:14 | 30-130 | 52.9 | 123 | 8:03 | 30-130 | 52.6 |
| 26 | 6:26 | 30-130 | 51.4 | 75 | 7:15 | 30-130 | 53.9 | 124 | 8:04 | 30-130 | 53.4 |
| 27 | 6:27 | 30-130 | 54.2 | 76 | 7:16 | 30-130 | 54.9 | 125 | 8:05 | 30-130 | 51.2 |
| 28 | 6:28 | 30-130 | 55.5 | 77 | 7:17 | 30-130 | 56.8 | 126 | 8:06 | 30-130 | 53.6 |
| 29 | 6:29 | 30-130 | 51.8 | 78 | 7:18 | 30-130 | 54.8 | 127 | 8:07 | 30-130 | 51.6 |
| 30 | 6:30 | 30-130 | 52.6 | 79 | 7:19 | 30-130 | 54.6 | 128 | 8:08 | 30-130 | 53.2 |
| 31 | 6:31 | 30-130 | 53.4 | 80 | 7:20 | 30-130 | 56.8 | 129 | 8:09 | 30-130 | 54.6 |
| 32 | 6:32 | 30-130 | 52.6 | 81 | 7:21 | 30-130 | 56.8 | 130 | 8:10 | 30-130 | 56.6 |
| 33 | 6:33 | 30-130 | 51.4 | 82 | 7:22 | 30-130 | 54.6 | 131 | 8:11 | 30-130 | 54.6 |
| 34 | 6:34 | 30-130 | 52.0 | 83 | 7:23 | 30-130 | 54.6 | 132 | 8:12 | 30-130 | 53.6 |
| 35 | 6:35 | 30-130 | 51.5 | 84 | 7:24 | 30-130 | 54.6 | 133 | 8:13 | 30-130 | 53.6 |
| 36 | 6:36 | 30-130 | 50.5 | 85 | 7:25 | 30-130 | 56.8 | 134 | 8:14 | 30-130 | 51.2 |
| 37 | 6:37 | 30-130 | 52.6 | 86 | 7:26 | 30-130 | 54.0 | 135 | 8:15 | 30-130 | 52.6 |
| 38 | 6:38 | 30-130 | 53.6 | 87 | 7:27 | 30-130 | 56.8 | 136 | 8:16 | 30-130 | 53.2 |
| 39 | 6:39 | 30-130 | 54.2 | 88 | 7:28 | 30-130 | 53.6 | 137 | 8:17 | 30-130 | 52.6 |
| 40 | 6:40 | 30-130 | 52.6 | 89 | 7:29 | 30-130 | 56.3 | 138 | 8:18 | 30-130 | 53.2 |
| 41 | 6:41 | 30-130 | 52.6 | 90 | 7:30 | 30-130 | 54.6 | 139 | 8:19 | 30-130 | 52.4 |
| 42 | 6:42 | 30-130 | 54.2 | 91 | 7:31 | 30-130 | 56.5 | 140 | 8:20 | 30-130 | 53.6 |
| 43 | 6:43 | 30-130 | 52.6 | 92 | 7:32 | 30-130 | 53.2 | 141 | 8:21 | 30-130 | 52.4 |
| 44 | 6:44 | 30-130 | 53.2 | 93 | 7:33 | 30-130 | 52.6 | 142 | 8:22 | 30-130 | 52.3 |
| 45 | 6:45 | 30-130 | 52.6 | 94 | 7:34 | 30-130 | 53.6 | 143 | 8:23 | 30-130 | 53.6 |
| 46 | 6:46 | 30-130 | 51.6 | 95 | 7:35 | 30-130 | 53.6 | 144 | 8:24 | 30-130 | 53.6 |
| 47 | 6:47 | 30-130 | 50.3 | 96 | 7:36 | 30-130 | 53.6 | 145 | 8:25 | 30-130 | 54.6 |
| 48 | 6:48 | 30-130 | 52.7 | 97 | 7:37 | 30-130 | 52.3 | 146 | 8:26 | 30-130 | 53.3 |
| 49 | 6:49 | 30-130 | 52.3 | 98 | 7:38 | 30-130 | 53.6 | 147 | 8:27 | 30-130 | 54.6 |

# BHARAT PETROLEUM CORPORATION LIMITED, BINA-M.P.

## NOISE MONITORING REPORT INSIDE GREEN BELT AREA

**Location-Tower No.5 Date-25/08/2023 July 2023 TO September 2023**

| NOISE MONITORING FOR DAY TIME (06:00 AM to 10:00 PM) | | | | | | | | | | | |
|---|---|---|---|---|---|---|---|---|---|---|---|
| Record No. | Time hh:mm | Range dB | Reading dB A | Record No. | Time hh:mm | Range dB | Reading dB A | Record No. | Time hh:mm | Range dB | Reading dB A |
| 148 | 8:28 | 30-130 | 53.2 | 197 | 9:17 | 30-130 | 55.4 | 246 | 10:06 | 30-130 | 56.0 |
| 149 | 8:29 | 30-130 | 52.3 | 198 | 9:18 | 30-130 | 55.7 | 247 | 10:07 | 30-130 | 55.6 |
| 150 | 8:30 | 30-130 | 52.6 | 199 | 9:19 | 30-130 | 55.4 | 248 | 10:08 | 30-130 | 56.2 |
| 151 | 8:31 | 30-130 | 53.2 | 200 | 9:20 | 30-130 | 55.5 | 249 | 10:09 | 30-130 | 56.0 |
| 152 | 8:32 | 30-130 | 53.2 | 201 | 9:21 | 30-130 | 55.7 | 250 | 10:10 | 30-130 | 55.5 |
| 153 | 8:33 | 30-130 | 51.2 | 202 | 9:22 | 30-130 | 54.8 | 251 | 10:11 | 30-130 | 56.5 |
| 154 | 8:34 | 30-130 | 52.0 | 203 | 9:23 | 30-130 | 55.2 | 252 | 10:12 | 30-130 | 55.8 |
| 155 | 8:35 | 30-130 | 52.3 | 204 | 9:24 | 30-130 | 54.7 | 253 | 10:13 | 30-130 | 55.9 |
| 156 | 8:36 | 30-130 | 51.2 | 205 | 9:25 | 30-130 | 55.2 | 254 | 10:14 | 30-130 | 56.0 |
| 157 | 8:37 | 30-130 | 52.6 | 206 | 9:26 | 30-130 | 55.3 | 255 | 10:15 | 30-130 | 56.4 |
| 158 | 8:38 | 30-130 | 53.4 | 207 | 9:27 | 30-130 | 54.8 | 256 | 10:16 | 30-130 | 56.1 |
| 159 | 8:39 | 30-130 | 54.2 | 208 | 9:28 | 30-130 | 55.3 | 257 | 10:17 | 30-130 | 55.1 |
| 160 | 8:40 | 30-130 | 54.3 | 209 | 9:29 | 30-130 | 54.6 | 258 | 10:18 | 30-130 | 56.4 |
| 161 | 8:41 | 30-130 | 52.5 | 210 | 9:30 | 30-130 | 54.8 | 259 | 10:19 | 30-130 | 56.2 |
| 162 | 8:42 | 30-130 | 51.6 | 211 | 9:31 | 30-130 | 55.1 | 260 | 10:20 | 30-130 | 56.0 |
| 163 | 8:43 | 30-130 | 51.0 | 212 | 9:32 | 30-130 | 55.0 | 261 | 10:21 | 30-130 | 55.1 |
| 164 | 8:44 | 30-130 | 50.6 | 213 | 9:33 | 30-130 | 55.1 | 262 | 10:22 | 30-130 | 55.8 |
| 165 | 8:45 | 30-130 | 50.8 | 214 | 9:34 | 30-130 | 55.5 | 263 | 10:23 | 30-130 | 56.0 |
| 166 | 8:46 | 30-130 | 52.1 | 215 | 9:35 | 30-130 | 54.6 | 264 | 10:24 | 30-130 | 56.1 |
| 167 | 8:47 | 30-130 | 52.9 | 216 | 3:36 | 30-130 | 55.4 | 265 | 10:25 | 30-130 | 55.2 |
| 168 | 8:48 | 30-130 | 53.2 | 217 | 9:37 | 30-130 | 54.8 | 266 | 10:26 | 30-130 | 55.3 |
| 169 | 8:49 | 30-130 | 52.3 | 218 | 9:38 | 30-130 | 55.6 | 267 | 10:27 | 30-130 | 55.4 |
| 170 | 8:50 | 30-130 | 51.6 | 219 | 9:39 | 30-130 | 55.4 | 268 | 10:28 | 30-130 | 56.1 |
| 171 | 8:51 | 30-130 | 54.4 | 220 | 9:40 | 30-130 | 55.4 | 269 | 10:29 | 30-130 | 56.0 |
| 172 | 8:52 | 30-130 | 53.2 | 221 | 9:41 | 30-130 | 55.9 | 270 | 10:30 | 30-130 | 55.7 |
| 173 | 8:53 | 30-130 | 52.7 | 222 | 9:42 | 30-130 | 55.5 | 271 | 10:31 | 30-130 | 55.2 |
| 174 | 8:54 | 30-130 | 53.2 | 223 | 9:43 | 30-130 | 55.7 | 272 | 10:32 | 30-130 | 55.8 |
| 175 | 8:55 | 30-130 | 52.7 | 224 | 9:44 | 30-130 | 55.3 | 273 | 10:33 | 30-130 | 55.4 |
| 176 | 8:56 | 30-130 | 53.6 | 225 | 9:45 | 30-130 | 55.7 | 274 | 10:34 | 30-130 | 56.5 |
| 177 | 8:57 | 30-130 | 53.1 | 226 | 9:46 | 30-130 | 54.7 | 275 | 10:35 | 30-130 | 55.3 |
| 178 | 8:58 | 30-130 | 54.7 | 227 | 9:47 | 30-130 | 55.0 | 276 | 10:36 | 30-130 | 55.5 |
| 179 | 8:59 | 30-130 | 55.7 | 228 | 9:48 | 30-130 | 55.4 | 277 | 10:37 | 30-130 | 55.7 |
| 180 | 9:00 | 30-130 | 54.8 | 229 | 9:49 | 30-130 | 55.0 | 278 | 10:38 | 30-130 | 55.4 |
| 181 | 9:01 | 30-130 | 55.8 | 230 | 9:50 | 30-130 | 55.2 | 279 | 10:39 | 30-130 | 55.7 |
| 182 | 9:02 | 30-130 | 55.5 | 231 | 9:51 | 30-130 | 55.6 | 280 | 10:40 | 30-130 | 56.1 |
| 183 | 9:03 | 30-130 | 54.7 | 232 | 9:52 | 30-130 | 54.6 | 281 | 10:41 | 30-130 | 55.7 |
| 184 | 9:04 | 30-130 | 55.3 | 233 | 9:53 | 30-130 | 55.5 | 282 | 10:42 | 30-130 | 55.3 |
| 185 | 9:05 | 30-130 | 55.3 | 234 | 9:54 | 30-130 | 55.1 | 283 | 10:43 | 30-130 | 55.4 |
| 186 | 9:06 | 30-130 | 54.8 | 235 | 9:55 | 30-130 | 54.8 | 284 | 10:44 | 30-130 | 55.7 |
| 187 | 9:07 | 30-130 | 54.8 | 236 | 9:56 | 30-130 | 55.5 | 285 | 10:45 | 30-130 | 55.6 |
| 188 | 9:08 | 30-130 | 54.7 | 237 | 9:57 | 30-130 | 55.4 | 286 | 10:46 | 30-130 | 55.6 |
| 189 | 9:09 | 30-130 | 55.6 | 238 | 9:58 | 30-130 | 55.9 | 287 | 10:47 | 30-130 | 55.7 |
| 190 | 9:10 | 30-130 | 55.2 | 239 | 9:59 | 30-130 | 55.6 | 288 | 10:48 | 30-130 | 56.2 |
| 191 | 9:11 | 30-130 | 55.4 | 240 | 10:00 | 30-130 | 54.8 | 289 | 10:49 | 30-130 | 55.6 |
| 192 | 9:12 | 30-130 | 54.8 | 241 | 10:01 | 30-130 | 55.7 | 290 | 10:50 | 30-130 | 55.7 |
| 193 | 9:13 | 30-130 | 54.7 | 242 | 10:02 | 30-130 | 55.5 | 291 | 10:51 | 30-130 | 55.2 |
| 194 | 9:14 | 30-130 | 55.4 | 243 | 10:03 | 30-130 | 55.6 | 292 | 10:52 | 30-130 | 55.9 |
| 195 | 9:15 | 30-130 | 54.7 | 244 | 10:04 | 30-130 | 56.4 | 293 | 10:53 | 30-130 | 56.4 |
| 196 | 9:16 | 30-130 | 55.7 | 245 | 10:05 | 30-130 | 56.4 | 294 | 10:54 | 30-130 | 56.3 |

# BHARAT PETROLEUM CORPORATION LIMITED, BINA-M.P.

## NOISE MONITORING REPORT INSIDE GREEN BELT AREA

**Location-Tower No.5 Date-25/08/2023 July 2023 TO September 2023**

| NOISE MONITORING FOR DAY TIME (06:00 AM to 10:00 PM) | | | | | | | | | | | |
|---|---|---|---|---|---|---|---|---|---|---|---|
| Record No. | Time hh:mm | Range dB | Reading dB A | Record No. | Time hh:mm | Range dB | Reading dB A | Record No. | Time hh:mm | Range dB | Reading dB A |
| 295 | 10:55 | 30-130 | 56.1 | 344 | 11:44 | 30-130 | 55.1 | 393 | 12:33 | 30-130 | 56.1 |
| 296 | 10:56 | 30-130 | 55.3 | 345 | 11:45 | 30-130 | 52.6 | 394 | 12:34 | 30-130 | 56.8 |
| 297 | 10:57 | 30-130 | 55.4 | 346 | 11:46 | 30-130 | 53.2 | 395 | 12:35 | 30-130 | 57.1 |
| 298 | 10:58 | 30-130 | 55.8 | 347 | 11:47 | 30-130 | 55.6 | 396 | 12:36 | 30-130 | 56.3 |
| 299 | 10:59 | 30-130 | 55.5 | 348 | 11:48 | 30-130 | 54.9 | 397 | 12:37 | 30-130 | 56.0 |
| 300 | 11:00 | 30-130 | 55.8 | 349 | 11:49 | 30-130 | 54.2 | 398 | 12:38 | 30-130 | 56.5 |
| 301 | 11:01 | 30-130 | 53.4 | 350 | 11:50 | 30-130 | 52.3 | 399 | 12:39 | 30-130 | 57.2 |
| 302 | 11:02 | 30-130 | 52.6 | 351 | 11:51 | 30-130 | 52.6 | 400 | 12:40 | 30-130 | 56.4 |
| 303 | 11:03 | 30-130 | 53.6 | 352 | 11:52 | 30-130 | 53.2 | 401 | 12:41 | 30-130 | 56.7 |
| 304 | 11:04 | 30-130 | 54.2 | 353 | 11:53 | 30-130 | 52.6 | 402 | 12:42 | 30-130 | 56.8 |
| 305 | 11:05 | 30-130 | 52.3 | 354 | 11:54 | 30-130 | 51.5 | 403 | 12:43 | 30-130 | 56.2 |
| 306 | 11:06 | 30-130 | 53.1 | 355 | 11:55 | 30-130 | 52.6 | 404 | 12:44 | 30-130 | 56.7 |
| 307 | 11:07 | 30-130 | 53.2 | 356 | 11:56 | 30-130 | 51.6 | 405 | 12:45 | 30-130 | 56.6 |
| 308 | 11:08 | 30-130 | 52.6 | 357 | 11:57 | 30-130 | 52.1 | 406 | 12:46 | 30-130 | 57.0 |
| 309 | 11:09 | 30-130 | 52.6 | 358 | 11:58 | 30-130 | 55.3 | 407 | 12:47 | 30-130 | 56.1 |
| 310 | 11:10 | 30-130 | 53.4 | 359 | 11:59 | 30-130 | 56.6 | 408 | 12:48 | 30-130 | 56.5 |
| 311 | 11:11 | 30-130 | 52.6 | 360 | 12:00 | 30-130 | 54.6 | 409 | 12:49 | 30-130 | 56.0 |
| 312 | 11:12 | 30-130 | 55.3 | 361 | 12:01 | 30-130 | 56.4 | 410 | 12:50 | 30-130 | 55.9 |
| 313 | 11:13 | 30-130 | 51.6 | 362 | 12:02 | 30-130 | 56.6 | 411 | 12:51 | 30-130 | 56.4 |
| 314 | 11:14 | 30-130 | 52.6 | 363 | 12:03 | 30-130 | 56.2 | 412 | 12:52 | 30-130 | 57.2 |
| 315 | 11:15 | 30-130 | 53.4 | 364 | 12:04 | 30-130 | 56.4 | 413 | 12:53 | 30-130 | 56.4 |
| 316 | 11:16 | 30-130 | 52.6 | 365 | 12:05 | 30-130 | 56.7 | 414 | 12:54 | 30-130 | 56.1 |
| 317 | 11:17 | 30-130 | 53.6 | 366 | 12:06 | 30-130 | 56.1 | 415 | 12:55 | 30-130 | 56.6 |
| 318 | 11:18 | 30-130 | 51.8 | 367 | 12:07 | 30-130 | 56.1 | 416 | 12:56 | 30-130 | 56.6 |
| 319 | 11:19 | 30-130 | 52.6 | 368 | 12:08 | 30-130 | 56.4 | 417 | 12:57 | 30-130 | 56.5 |
| 320 | 11:20 | 30-130 | 53.6 | 369 | 12:09 | 30-130 | 56.4 | 418 | 12:58 | 30-130 | 56.2 |
| 321 | 11:21 | 30-130 | 52.6 | 370 | 12:10 | 30-130 | 56.8 | 419 | 12:59 | 30-130 | 56.0 |
| 322 | 11:22 | 30-130 | 56.3 | 371 | 12:11 | 30-130 | 56.2 | 420 | 13:00 | 30-130 | 56.5 |
| 323 | 11:23 | 30-130 | 52.9 | 372 | 12:12 | 30-130 | 57.2 | 421 | 13:01 | 30-130 | 55.9 |
| 324 | 11:24 | 30-130 | 52.3 | 373 | 12:13 | 30-130 | 56.9 | 422 | 13:02 | 30-130 | 55.8 |
| 325 | 11:25 | 30-130 | 54.6 | 374 | 12:14 | 30-130 | 56.7 | 423 | 13:03 | 30-130 | 55.9 |
| 326 | 11:26 | 30-130 | 52.6 | 375 | 12:15 | 30-130 | 56.2 | 424 | 13:04 | 30-130 | 56.6 |
| 327 | 11:27 | 30-130 | 52.3 | 376 | 12:16 | 30-130 | 57.0 | 425 | 13:05 | 30-130 | 56.2 |
| 328 | 11:28 | 30-130 | 53.6 | 377 | 12:17 | 30-130 | 56.3 | 426 | 13:06 | 30-130 | 56.2 |
| 329 | 11:29 | 30-130 | 55.6 | 378 | 12:18 | 30-130 | 57.1 | 427 | 13:07 | 30-130 | 55.9 |
| 330 | 11:30 | 30-130 | 57.3 | 379 | 12:19 | 30-130 | 56.9 | 428 | 13:08 | 30-130 | 56.0 |
| 331 | 11:31 | 30-130 | 57.5 | 380 | 12:20 | 30-130 | 56.1 | 429 | 13:09 | 30-130 | 55.9 |
| 332 | 11:32 | 30-130 | 57.1 | 381 | 12:21 | 30-130 | 56.7 | 430 | 13:10 | 30-130 | 56.2 |
| 333 | 11:33 | 30-130 | 56.4 | 382 | 12:22 | 30-130 | 56.5 | 431 | 13:11 | 30-130 | 55.9 |
| 334 | 11:34 | 30-130 | 57.2 | 383 | 12:23 | 30-130 | 56.5 | 432 | 13:12 | 30-130 | 56.4 |
| 335 | 11:35 | 30-130 | 57.1 | 384 | 12:24 | 30-130 | 57.1 | 433 | 13:13 | 30-130 | 56.2 |
| 336 | 11:36 | 30-130 | 56.4 | 385 | 12:25 | 30-130 | 56.0 | 434 | 13:14 | 30-130 | 56.5 |
| 337 | 11:37 | 30-130 | 57.4 | 386 | 12:26 | 30-130 | 56.2 | 435 | 13:15 | 30-130 | 56.2 |
| 338 | 11:38 | 30-130 | 56.4 | 387 | 12:27 | 30-130 | 56.1 | 436 | 13:16 | 30-130 | 56.0 |
| 339 | 11:39 | 30-130 | 55.6 | 388 | 12:28 | 30-130 | 56.1 | 437 | 13:17 | 30-130 | 56.5 |
| 340 | 11:40 | 30-130 | 55.7 | 389 | 12:29 | 30-130 | 56.7 | 438 | 13:18 | 30-130 | 56.4 |
| 341 | 11:41 | 30-130 | 56.1 | 390 | 12:30 | 30-130 | 56.7 | 439 | 13:19 | 30-130 | 56.3 |
| 342 | 11:42 | 30-130 | 54.2 | 391 | 12:31 | 30-130 | 56.7 | 440 | 13:20 | 30-130 | 56.6 |
| 343 | 11:43 | 30-130 | 52.6 | 392 | 12:32 | 30-130 | 56.6 | 441 | 13:21 | 30-130 | 56.0 |

# BHARAT PETROLEUM CORPORATION LIMITED, BINA-M.P.

## NOISE MONITORING REPORT INSIDE GREEN BELT AREA

## Location-Tower No.5 Date-25/08/2023 July 2023 TO September 2023

| NOISE MONITORING FOR DAY TIME (06:00 AM to 10:00 PM) | | | | | | | | | | | |
|---|---|---|---|---|---|---|---|---|---|---|---|
| Record No. | Time hh:mm | Range dB | Reading dB A | Record No. | Time hh:mm | Range dB | Reading dB A | Record No. | Time hh:mm | Range dB | Reading dB A |
| 442 | 13:22 | 30-130 | 56.0 | 491 | 14:11 | 30-130 | 53.4 | 540 | 15:00 | 30-130 | 52.6 |
| 443 | 13:23 | 30-130 | 55.8 | 492 | 14:12 | 30-130 | 52.6 | 541 | 15:01 | 30-130 | 57.8 |
| 444 | 13:24 | 30-130 | 55.9 | 493 | 14:13 | 30-130 | 53.4 | 542 | 15:02 | 30-130 | 56.9 |
| 445 | 13:25 | 30-130 | 56.4 | 494 | 14:14 | 30-130 | 52.6 | 543 | 15:03 | 30-130 | 57.3 |
| 446 | 13:26 | 30-130 | 56.6 | 495 | 14:15 | 30-130 | 53.6 | 544 | 15:04 | 30-130 | 57.8 |
| 447 | 13:27 | 30-130 | 56.3 | 496 | 14:16 | 30-130 | 52.6 | 545 | 15:05 | 30-130 | 57.9 |
| 448 | 13:28 | 30-130 | 56.6 | 497 | 14:17 | 30-130 | 51.3 | 546 | 15:06 | 30-130 | 57.2 |
| 449 | 13:29 | 30-130 | 56.2 | 498 | 14:18 | 30-130 | 53.6 | 547 | 15:07 | 30-130 | 58.0 |
| 450 | 13:30 | 30-130 | 55.8 | 499 | 14:19 | 30-130 | 51.0 | 548 | 15:08 | 30-130 | 57.6 |
| 451 | 13:31 | 30-130 | 56.5 | 500 | 14:20 | 30-130 | 52.3 | 549 | 15:09 | 30-130 | 57.2 |
| 452 | 13:32 | 30-130 | 56.2 | 501 | 14:21 | 30-130 | 51.0 | 550 | 15:10 | 30-130 | 56.8 |
| 453 | 13:33 | 30-130 | 55.9 | 502 | 14:22 | 30-130 | 51.2 | 551 | 15:11 | 30-130 | 57.5 |
| 454 | 13:34 | 30-130 | 56.3 | 503 | 14:23 | 30-130 | 52.3 | 552 | 15:12 | 30-130 | 57.8 |
| 455 | 13:35 | 30-130 | 55.8 | 504 | 14:24 | 30-130 | 53.2 | 553 | 15:13 | 30-130 | 56.8 |
| 456 | 13:36 | 30-130 | 55.8 | 505 | 14:25 | 30-130 | 51.2 | 554 | 15:14 | 30-130 | 57.2 |
| 457 | 13:37 | 30-130 | 55.9 | 506 | 14:26 | 30-130 | 52.6 | 555 | 15:15 | 30-130 | 58.1 |
| 458 | 13:38 | 30-130 | 56.6 | 507 | 14:27 | 30-130 | 53.2 | 556 | 15:16 | 30-130 | 57.5 |
| 459 | 13:39 | 30-130 | 55.9 | 508 | 14:28 | 30-130 | 52.6 | 557 | 15:17 | 30-130 | 58.0 |
| 460 | 13:40 | 30-130 | 56.6 | 509 | 14:29 | 30-130 | 53.4 | 558 | 15:18 | 30-130 | 57.0 |
| 461 | 13:41 | 30-130 | 56.2 | 510 | 14:30 | 30-130 | 51.2 | 559 | 15:19 | 30-130 | 57.1 |
| 462 | 13:42 | 30-130 | 56.2 | 511 | 14:31 | 30-130 | 53.6 | 560 | 15:20 | 30-130 | 57.9 |
| 463 | 13:43 | 30-130 | 55.9 | 512 | 14:32 | 30-130 | 51.6 | 561 | 15:21 | 30-130 | 57.7 |
| 464 | 13:44 | 30-130 | 56.2 | 513 | 14:33 | 30-130 | 53.2 | 562 | 15:22 | 30-130 | 57.5 |
| 465 | 13:45 | 30-130 | 56.6 | 514 | 14:34 | 30-130 | 51.2 | 563 | 15:23 | 30-130 | 56.8 |
| 466 | 13:46 | 30-130 | 56.6 | 515 | 14:35 | 30-130 | 53.6 | 564 | 15:24 | 30-130 | 57.9 |
| 467 | 13:47 | 30-130 | 56.3 | 516 | 14:36 | 30-130 | 54.2 | 565 | 15:25 | 30-130 | 57.6 |
| 468 | 13:48 | 30-130 | 56.0 | 517 | 14:37 | 30-130 | 53.6 | 566 | 15:26 | 30-130 | 58.0 |
| 469 | 13:49 | 30-130 | 55.9 | 518 | 14:38 | 30-130 | 54.6 | 567 | 15:27 | 30-130 | 57.3 |
| 470 | 13:50 | 30-130 | 56.4 | 519 | 14:39 | 30-130 | 56.3 | 568 | 15:28 | 30-130 | 57.3 |
| 471 | 13:51 | 30-130 | 56.6 | 520 | 14:40 | 30-130 | 54.3 | 569 | 15:29 | 30-130 | 57.9 |
| 472 | 13:52 | 30-130 | 56.5 | 521 | 14:41 | 30-130 | 54.3 | 570 | 15:30 | 30-130 | 58.0 |
| 473 | 13:53 | 30-130 | 56.5 | 522 | 14:42 | 30-130 | 53.3 | 571 | 15:31 | 30-130 | 58.1 |
| 474 | 13:54 | 30-130 | 56.1 | 523 | 14:43 | 30-130 | 53.2 | 572 | 15:32 | 30-130 | 57.9 |
| 475 | 13:55 | 30-130 | 55.8 | 524 | 14:44 | 30-130 | 52.4 | 573 | 15:33 | 30-130 | 57.9 |
| 476 | 13:56 | 30-130 | 56.0 | 525 | 14:45 | 30-130 | 53.6 | 574 | 15:34 | 30-130 | 57.7 |
| 477 | 13:57 | 30-130 | 56.4 | 526 | 14:46 | 30-130 | 52.4 | 575 | 15:35 | 30-130 | 57.1 |
| 478 | 13:58 | 30-130 | 56.1 | 527 | 14:47 | 30-130 | 53.6 | 576 | 15:36 | 30-130 | 57.4 |
| 479 | 13:59 | 30-130 | 56.3 | 528 | 14:48 | 30-130 | 54.3 | 577 | 15:37 | 30-130 | 57.4 |
| 480 | 14:00 | 30-130 | 56.5 | 529 | 14:49 | 30-130 | 54.3 | 578 | 15:38 | 30-130 | 57.4 |
| 481 | 14:01 | 30-130 | 53.6 | 530 | 14:50 | 30-130 | 52.3 | 579 | 15:39 | 30-130 | 57.8 |
| 482 | 14:02 | 30-130 | 52.3 | 531 | 14:51 | 30-130 | 53.3 | 580 | 15:40 | 30-130 | 57.6 |
| 483 | 14:03 | 30-130 | 53.6 | 532 | 14:52 | 30-130 | 53.3 | 581 | 15:41 | 30-130 | 56.9 |
| 484 | 14:04 | 30-130 | 53.9 | 533 | 14:53 | 30-130 | 52.6 | 582 | 15:42 | 30-130 | 56.8 |
| 485 | 14:05 | 30-130 | 52.1 | 534 | 14:54 | 30-130 | 53.1 | 583 | 15:43 | 30-130 | 57.3 |
| 486 | 14:06 | 30-130 | 53.6 | 535 | 14:55 | 30-130 | 52.6 | 584 | 15:44 | 30-130 | 57.6 |
| 487 | 14:07 | 30-130 | 52.6 | 536 | 14:56 | 30-130 | 53.4 | 585 | 15:45 | 30-130 | 57.3 |
| 488 | 14:08 | 30-130 | 53.9 | 537 | 14:57 | 30-130 | 51.2 | 586 | 15:46 | 30-130 | 57.1 |
| 489 | 14:09 | 30-130 | 51.7 | 538 | 14:58 | 30-130 | 49.1 | 587 | 15:47 | 30-130 | 57.6 |
| 490 | 14:10 | 30-130 | 52.6 | 539 | 14:59 | 30-130 | 52.1 | 588 | 15:48 | 30-130 | 57.1 |

# BHARAT PETROLEUM CORPORATION LIMITED, BINA-M.P.

## NOISE MONITORING REPORT INSIDE GREEN BELT AREA

## Location-Tower No.5 Date-25/08/2023 July 2023 TO September 2023

| NOISE MONITORING FOR DAY TIME (06:00 AM to 10:00 PM) | | | | | | | | | | | |
|---|---|---|---|---|---|---|---|---|---|---|---|
| Record No. | Time hh:mm | Range dB | Reading dB A | Record No. | Time hh:mm | Range dB | Reading dB A | Record No. | Time hh:mm | Range dB | Reading dB A |
| 589 | 15:49 | 30-130 | 56.9 | 638 | 16:38 | 30-130 | 56.8 | 687 | 17:27 | 30-130 | 51.2 |
| 590 | 15:50 | 30-130 | 57.7 | 639 | 16:39 | 30-130 | 57.0 | 688 | 17:28 | 30-130 | 52.1 |
| 591 | 15:51 | 30-130 | 57.9 | 640 | 16:40 | 30-130 | 56.4 | 689 | 17:29 | 30-130 | 51.2 |
| 592 | 15:52 | 30-130 | 56.9 | 641 | 16:41 | 30-130 | 56.5 | 690 | 17:30 | 30-130 | 51.2 |
| 593 | 15:53 | 30-130 | 57.7 | 642 | 16:42 | 30-130 | 56.9 | 691 | 17:31 | 30-130 | 52.3 |
| 594 | 15:54 | 30-130 | 57.7 | 643 | 16:43 | 30-130 | 57.0 | 692 | 17:32 | 30-130 | 52.3 |
| 595 | 15:55 | 30-130 | 56.8 | 644 | 16:44 | 30-130 | 56.6 | 693 | 17:33 | 30-130 | 52.1 |
| 596 | 15:56 | 30-130 | 57.8 | 645 | 16:45 | 30-130 | 56.7 | 694 | 17:34 | 30-130 | 52.1 |
| 597 | 15:57 | 30-130 | 57.4 | 646 | 16:46 | 30-130 | 56.6 | 695 | 17:35 | 30-130 | 52.3 |
| 598 | 15:58 | 30-130 | 57.7 | 647 | 16:47 | 30-130 | 56.4 | 696 | 17:36 | 30-130 | 51.6 |
| 599 | 15:59 | 30-130 | 57.0 | 648 | 16:48 | 30-130 | 56.3 | 697 | 17:37 | 30-130 | 51.6 |
| 600 | 16:00 | 30-130 | 57.2 | 649 | 16:49 | 30-130 | 56.5 | 698 | 17:38 | 30-130 | 52.6 |
| 601 | 16:01 | 30-130 | 56.5 | 650 | 16:50 | 30-130 | 56.5 | 699 | 17:39 | 30-130 | 51.6 |
| 602 | 16:02 | 30-130 | 56.7 | 651 | 16:51 | 30-130 | 57.2 | 700 | 17:40 | 30-130 | 52.6 |
| 603 | 16:03 | 30-130 | 57.0 | 652 | 16:52 | 30-130 | 56.9 | 701 | 17:41 | 30-130 | 52.6 |
| 604 | 16:04 | 30-130 | 56.5 | 653 | 16:53 | 30-130 | 56.7 | 702 | 17:42 | 30-130 | 53.4 |
| 605 | 16:05 | 30-130 | 57.2 | 654 | 16:54 | 30-130 | 57.2 | 703 | 17:43 | 30-130 | 52.9 |
| 606 | 16:06 | 30-130 | 56.9 | 655 | 16:55 | 30-130 | 56.4 | 704 | 17:44 | 30-130 | 52.9 |
| 607 | 16:07 | 30-130 | 56.9 | 656 | 16:56 | 30-130 | 56.6 | 705 | 17:45 | 30-130 | 51.9 |
| 608 | 16:08 | 30-130 | 56.3 | 657 | 16:57 | 30-130 | 56.8 | 706 | 17:46 | 30-130 | 53.7 |
| 609 | 16:09 | 30-130 | 56.7 | 658 | 16:58 | 30-130 | 56.7 | 707 | 17:47 | 30-130 | 52.7 |
| 610 | 16:10 | 30-130 | 56.9 | 659 | 16:59 | 30-130 | 56.5 | 708 | 17:48 | 30-130 | 51.6 |
| 611 | 16:11 | 30-130 | 56.9 | 660 | 17:00 | 30-130 | 56.6 | 709 | 17:49 | 30-130 | 53.4 |
| 612 | 16:12 | 30-130 | 56.6 | 661 | 17:01 | 30-130 | 51.0 | 710 | 17:50 | 30-130 | 52.6 |
| 613 | 16:13 | 30-130 | 56.9 | 662 | 17:02 | 30-130 | 50.1 | 711 | 17:51 | 30-130 | 52.6 |
| 614 | 16:14 | 30-130 | 57.1 | 663 | 17:03 | 30-130 | 51.2 | 712 | 17:52 | 30-130 | 53.4 |
| 615 | 16:15 | 30-130 | 56.4 | 664 | 17:04 | 30-130 | 51.2 | 713 | 17:53 | 30-130 | 54.6 |
| 616 | 16:16 | 30-130 | 56.4 | 665 | 17:05 | 30-130 | 50.1 | 714 | 17:54 | 30-130 | 53.5 |
| 617 | 16:17 | 30-130 | 56.8 | 666 | 17:06 | 30-130 | 51.6 | 715 | 17:55 | 30-130 | 53.8 |
| 618 | 16:18 | 30-130 | 56.5 | 667 | 17:07 | 30-130 | 52.6 | 716 | 17:56 | 30-130 | 53.4 |
| 619 | 16:19 | 30-130 | 56.6 | 668 | 17:08 | 30-130 | 51.6 | 717 | 17:57 | 30-130 | 53.9 |
| 620 | 16:20 | 30-130 | 57.2 | 669 | 17:09 | 30-130 | 52.6 | 718 | 17:58 | 30-130 | 53.5 |
| 621 | 16:21 | 30-130 | 57.2 | 670 | 17:10 | 30-130 | 52.4 | 719 | 17:59 | 30-130 | 54.6 |
| 622 | 16:22 | 30-130 | 56.4 | 671 | 17:11 | 30-130 | 51.2 | 720 | 18:00 | 30-130 | 54.6 |
| 623 | 16:23 | 30-130 | 56.6 | 672 | 17:12 | 30-130 | 51.2 | 721 | 18:01 | 30-130 | 54.9 |
| 624 | 16:24 | 30-130 | 57.2 | 673 | 17:13 | 30-130 | 50.6 | 722 | 18:02 | 30-130 | 56.8 |
| 625 | 16:25 | 30-130 | 56.8 | 674 | 17:14 | 30-130 | 51.6 | 723 | 18:03 | 30-130 | 54.6 |
| 626 | 16:26 | 30-130 | 56.4 | 675 | 17:15 | 30-130 | 52.6 | 724 | 18:04 | 30-130 | 54.6 |
| 627 | 16:27 | 30-130 | 56.4 | 676 | 17:16 | 30-130 | 52.9 | 725 | 18:05 | 30-130 | 54.6 |
| 628 | 16:28 | 30-130 | 56.6 | 677 | 17:17 | 30-130 | 52.4 | 726 | 18:06 | 30-130 | 54.4 |
| 629 | 16:29 | 30-130 | 56.9 | 678 | 17:18 | 30-130 | 52.4 | 727 | 18:07 | 30-130 | 54.6 |
| 630 | 16:30 | 30-130 | 57.0 | 679 | 17:19 | 30-130 | 52.3 | 728 | 18:08 | 30-130 | 54.6 |
| 631 | 16:31 | 30-130 | 56.6 | 680 | 17:20 | 30-130 | 51.2 | 729 | 18:09 | 30-130 | 54.6 |
| 632 | 16:32 | 30-130 | 57.0 | 681 | 17:21 | 30-130 | 51.6 | 730 | 18:10 | 30-130 | 54.6 |
| 633 | 16:33 | 30-130 | 57.1 | 682 | 17:22 | 30-130 | 52.3 | 731 | 18:11 | 30-130 | 54.6 |
| 634 | 16:34 | 30-130 | 56.6 | 683 | 17:23 | 30-130 | 51.5 | 732 | 18:12 | 30-130 | 54.5 |
| 635 | 16:35 | 30-130 | 57.1 | 684 | 17:24 | 30-130 | 52.0 | 733 | 18:13 | 30-130 | 53.6 |
| 636 | 16:36 | 30-130 | 57.1 | 685 | 17:25 | 30-130 | 51.6 | 734 | 18:14 | 30-130 | 52.3 |
| 637 | 16:37 | 30-130 | 57.1 | 686 | 17:26 | 30-130 | 50.6 | 735 | 18:15 | 30-130 | 52.3 |

# BHARAT PETROLEUM CORPORATION LIMITED, BINA-M.P.

## NOISE MONITORING REPORT INSIDE GREEN BELT AREA

**Location-Tower No.5 Date-25/08/2023 July 2023 TO September 2023**

| NOISE MONITORING FOR DAY TIME (06:00 AM to 10:00 PM) | | | | | | | | | | | |
|---|---|---|---|---|---|---|---|---|---|---|---|
| Record No. | Time hh:mm | Range dB | Reading dB A | Record No. | Time hh:mm | Range dB | Reading dB A | Record No. | Time hh:mm | Range dB | Reading dB A |
| 736 | 18:16 | 30-130 | 52.3 | 785 | 19:05 | 30-130 | 53.2 | 834 | 19:54 | 30-130 | 52.6 |
| 737 | 18:17 | 30-130 | 52.1 | 786 | 19:06 | 30-130 | 52.7 | 835 | 19:55 | 30-130 | 52.6 |
| 738 | 18:18 | 30-130 | 52.3 | 787 | 19:07 | 30-130 | 53.3 | 836 | 19:56 | 30-130 | 53.2 |
| 739 | 18:19 | 30-130 | 53.2 | 788 | 19:08 | 30-130 | 53.6 | 837 | 19:57 | 30-130 | 53.2 |
| 740 | 18:20 | 30-130 | 52.1 | 789 | 19:09 | 30-130 | 53.2 | 838 | 19:58 | 30-130 | 52.6 |
| 741 | 18:21 | 30-130 | 51.3 | 790 | 19:10 | 30-130 | 52.6 | 839 | 19:59 | 30-130 | 54.7 |
| 742 | 18:22 | 30-130 | 52.3 | 791 | 19:11 | 30-130 | 53.4 | 840 | 20:00 | 30-130 | 53.4 |
| 743 | 18:23 | 30-130 | 52.3 | 792 | 19:12 | 30-130 | 52.6 | 841 | 20:01 | 30-130 | 52.6 |
| 744 | 18:24 | 30-130 | 53.2 | 793 | 19:13 | 30-130 | 53.6 | 842 | 20:02 | 30-130 | 53.6 |
| 745 | 18:25 | 30-130 | 54.6 | 794 | 19:14 | 30-130 | 52.6 | 843 | 20:03 | 30-130 | 54.6 |
| 746 | 18:26 | 30-130 | 51.2 | 795 | 19:15 | 30-130 | 53.4 | 844 | 20:04 | 30-130 | 52.6 |
| 747 | 18:27 | 30-130 | 53.6 | 796 | 19:16 | 30-130 | 52.0 | 845 | 20:05 | 30-130 | 53.2 |
| 748 | 18:28 | 30-130 | 51.6 | 797 | 19:17 | 30-130 | 53.6 | 846 | 20:06 | 30-130 | 52.6 |
| 749 | 18:29 | 30-130 | 53.6 | 798 | 19:18 | 30-130 | 54.2 | 847 | 20:07 | 30-130 | 53.4 |
| 750 | 18:30 | 30-130 | 52.6 | 799 | 19:19 | 30-130 | 53.3 | 848 | 20:08 | 30-130 | 52.6 |
| 751 | 18:31 | 30-130 | 54.6 | 800 | 19:20 | 30-130 | 53.6 | 849 | 20:09 | 30-130 | 52.6 |
| 752 | 18:32 | 30-130 | 51.2 | 801 | 19:21 | 30-130 | 53.6 | 850 | 20:10 | 30-130 | 52.6 |
| 753 | 18:33 | 30-130 | 52.3 | 802 | 19:22 | 30-130 | 54.2 | 851 | 20:11 | 30-130 | 53.2 |
| 754 | 18:34 | 30-130 | 52.1 | 803 | 19:23 | 30-130 | 54.2 | 852 | 20:12 | 30-130 | 52.6 |
| 755 | 18:35 | 30-130 | 51.2 | 804 | 19:24 | 30-130 | 53.6 | 853 | 20:13 | 30-130 | 53.2 |
| 756 | 15:36 | 30-130 | 51.2 | 805 | 19:25 | 30-130 | 53.6 | 854 | 20:14 | 30-130 | 52.6 |
| 757 | 18:37 | 30-130 | 52.3 | 806 | 19:26 | 30-130 | 54.5 | 855 | 20:15 | 30-130 | 53.2 |
| 758 | 18:38 | 30-130 | 52.3 | 807 | 19:27 | 30-130 | 53.2 | 856 | 20:16 | 30-130 | 52.8 |
| 759 | 18:39 | 30-130 | 53.2 | 808 | 19:28 | 30-130 | 53.6 | 857 | 20:17 | 30-130 | 53.6 |
| 760 | 18:40 | 30-130 | 52.1 | 809 | 19:29 | 30-130 | 54.6 | 858 | 20:18 | 30-130 | 53.4 |
| 761 | 18:41 | 30-130 | 51.3 | 810 | 19:30 | 30-130 | 53.5 | 859 | 20:19 | 30-130 | 52.1 |
| 762 | 18:42 | 30-130 | 52.3 | 811 | 19:31 | 30-130 | 52.6 | 860 | 20:20 | 30-130 | 52.6 |
| 763 | 18:43 | 30-130 | 52.3 | 812 | 19:32 | 30-130 | 53.4 | 861 | 20:21 | 30-130 | 53.2 |
| 764 | 18:44 | 30-130 | 50.3 | 813 | 19:33 | 30-130 | 52.6 | 862 | 20:22 | 30-130 | 52.6 |
| 765 | 18:45 | 30-130 | 51.2 | 814 | 19:34 | 30-130 | 53.4 | 863 | 20:23 | 30-130 | 52.3 |
| 766 | 18:46 | 30-130 | 50.3 | 815 | 19:35 | 30-130 | 52.3 | 864 | 20:24 | 30-130 | 53.2 |
| 767 | 18:47 | 30-130 | 50.3 | 816 | 19:36 | 30-130 | 52.6 | 865 | 20:25 | 30-130 | 52.6 |
| 768 | 18:48 | 30-130 | 51.0 | 817 | 19:37 | 30-130 | 53.4 | 866 | 20:26 | 30-130 | 53.6 |
| 769 | 18:49 | 30-130 | 50.2 | 818 | 19:38 | 30-130 | 53.6 | 867 | 20:27 | 30-130 | 53.6 |
| 770 | 18:50 | 30-130 | 50.3 | 819 | 19:39 | 30-130 | 53.2 | 868 | 20:28 | 30-130 | 53.6 |
| 771 | 18:51 | 30-130 | 50.6 | 820 | 19:40 | 30-130 | 52.3 | 869 | 20:29 | 30-130 | 52.3 |
| 772 | 18:52 | 30-130 | 51.0 | 821 | 19:41 | 30-130 | 53.5 | 870 | 20:30 | 30-130 | 53.6 |
| 773 | 18:53 | 30-130 | 50.6 | 822 | 19:42 | 30-130 | 53.1 | 871 | 20:31 | 30-130 | 53.9 |
| 774 | 18:54 | 30-130 | 51.2 | 823 | 19:43 | 30-130 | 52.0 | 872 | 20:32 | 30-130 | 52.1 |
| 775 | 18:55 | 30-130 | 50.6 | 824 | 19:44 | 30-130 | 53.3 | 873 | 20:33 | 30-130 | 53.6 |
| 776 | 18:56 | 30-130 | 50.2 | 825 | 19:45 | 30-130 | 52.3 | 874 | 20:34 | 30-130 | 52.6 |
| 777 | 18:57 | 30-130 | 54.6 | 826 | 19:46 | 30-130 | 52.3 | 875 | 20:35 | 30-130 | 53.9 |
| 778 | 18:58 | 30-130 | 54.0 | 827 | 19:47 | 30-130 | 54.2 | 876 | 20:36 | 30-130 | 54.7 |
| 779 | 18:59 | 30-130 | 54.2 | 828 | 19:48 | 30-130 | 52.0 | 877 | 20:37 | 30-130 | 52.6 |
| 780 | 19:00 | 30-130 | 54.6 | 829 | 19:49 | 30-130 | 54.2 | 878 | 20:38 | 30-130 | 53.4 |
| 781 | 19:01 | 30-130 | 53.6 | 830 | 19:50 | 30-130 | 53.3 | 879 | 20:39 | 30-130 | 52.6 |
| 782 | 19:02 | 30-130 | 54.6 | 831 | 19:51 | 30-130 | 53.2 | 880 | 20:40 | 30-130 | 53.4 |
| 783 | 19:03 | 30-130 | 53.5 | 832 | 19:52 | 30-130 | 52.3 | 881 | 20:41 | 30-130 | 54.6 |
| 784 | 19:04 | 30-130 | 54.2 | 833 | 19:53 | 30-130 | 53.0 | 882 | 20:42 | 30-130 | 52.6 |

# BHARAT PETROLEUM CORPORATION LIMITED, BINA-M.P.

## NOISE MONITORING REPORT INSIDE GREEN BELT AREA

**Location-Tower No.5 Date-25/08/2023 July 2023 TO September 2023**

| NOISE MONITORING FOR DAY TIME (06:00 AM to 10:00 PM) | | | | | | | |
|---|---|---|---|---|---|---|---|
| Record No. | Time hh:mm | Range dB | Reading dB A | Record No. | Time hh:mm | Range dB | Reading dB A |
| 883 | 20:43 | 30-130 | 52.6 | 922 | 21:22 | 30-130 | 52.6 |
| 884 | 20:44 | 30-130 | 53.3 | 923 | 21:23 | 30-130 | 53.4 |
| 885 | 20:45 | 30-130 | 53.6 | 924 | 21:24 | 30-130 | 54.2 |
| 886 | 20:46 | 30-130 | 54.0 | 925 | 21:25 | 30-130 | 53.1 |
| 887 | 20:47 | 30-130 | 52.3 | 926 | 21:26 | 30-130 | 52.1 |
| 888 | 20:48 | 30-130 | 52.6 | 927 | 21:27 | 30-130 | 54.1 |
| 889 | 20:49 | 30-130 | 53.2 | 928 | 21:28 | 30-130 | 54.2 |
| 890 | 20:50 | 30-130 | 52.3 | 929 | 21:29 | 30-130 | 53.6 |
| 891 | 20:51 | 30-130 | 53.2 | 930 | 21:30 | 30-130 | 53.2 |
| 892 | 20:52 | 30-130 | 53.2 | 931 | 21:31 | 30-130 | 53.6 |
| 893 | 20:53 | 30-130 | 52.6 | 932 | 21:32 | 30-130 | 54.3 |
| 894 | 20:54 | 30-130 | 53.2 | 933 | 21:33 | 30-130 | 53.7 |
| 895 | 20:55 | 30-130 | 54.6 | 934 | 21:34 | 30-130 | 52.9 |
| 896 | 20:56 | 30-130 | 53.4 | 935 | 21:35 | 30-130 | 52.6 |
| 897 | 20:57 | 30-130 | 53.2 | 936 | 21:36 | 30-130 | 53.2 |
| 898 | 20:58 | 30-130 | 53.6 | 937 | 21:37 | 30-130 | 52.2 |
| 899 | 20:59 | 30-130 | 53.6 | 938 | 21:38 | 30-130 | 53.6 |
| 900 | 21:00 | 30-130 | 53.2 | 939 | 21:39 | 30-130 | 54.2 |
| 901 | 21:01 | 30-130 | 54.2 | 940 | 21:40 | 30-130 | 51.2 |
| 902 | 21:02 | 30-130 | 53.6 | 941 | 21:41 | 30-130 | 53.6 |
| 903 | 21:03 | 30-130 | 54.2 | 942 | 21:42 | 30-130 | 53.2 |
| 904 | 21:04 | 30-130 | 53.6 | 943 | 21:43 | 30-130 | 54.2 |
| 905 | 21:05 | 30-130 | 53.3 | 944 | 21:44 | 30-130 | 52.1 |
| 906 | 21:06 | 30-130 | 54.2 | 945 | 21:45 | 30-130 | 53.4 |
| 907 | 21:07 | 30-130 | 52.6 | 946 | 21:46 | 30-130 | 53.2 |
| 908 | 21:08 | 30-130 | 53.2 | 947 | 21:47 | 30-130 | 54.6 |
| 909 | 21:09 | 30-130 | 52.6 | 948 | 21:48 | 30-130 | 52.9 |
| 910 | 21:10 | 30-130 | 53.2 | 949 | 21:49 | 30-130 | 51.6 |
| 911 | 21:11 | 30-130 | 52.4 | 950 | 21:50 | 30-130 | 50.4 |
| 912 | 21:12 | 30-130 | 53.6 | 951 | 21:51 | 30-130 | 52.1 |
| 913 | 21:13 | 30-130 | 52.4 | 952 | 21:52 | 30-130 | 54.2 |
| 914 | 21:14 | 30-130 | 52.3 | 953 | 21:53 | 30-130 | 52.6 |
| 915 | 21:15 | 30-130 | 53.2 | 954 | 21:54 | 30-130 | 54.4 |
| 916 | 21:16 | 30-130 | 53.6 | 955 | 21:55 | 30-130 | 52.6 |
| 917 | 21:17 | 30-130 | 52.2 | 956 | 21:56 | 30-130 | 53.4 |
| 918 | 21:18 | 30-130 | 53.3 | 957 | 21:57 | 30-130 | 52.6 |
| 919 | 21:19 | 30-130 | 54.2 | 958 | 21:58 | 30-130 | 53.3 |
| 920 | 21:20 | 30-130 | 52.6 | 959 | 21:59 | 30-130 | 53.2 |
| 921 | 21:21 | 30-130 | 53.4 | 960 | 22:00 | 30-130 | 53.4 |

# BHARAT PETROLEUM CORPORATION LIMITED, BINA-M.P.

## NOISE MONITORING REPORT INSIDE GREEN BELT AREA

**Location-Tower No.5 Date-25/08/2023 July 2023 TO September 2023**

| NOISE MONITORING FOR NIGHT TIME (10:00 PM to 06:00 AM) | | | | | | | | | | | |
|---|---|---|---|---|---|---|---|---|---|---|---|
| Record No. | Time hh:mm | Range dB | Reading dB A | Record No. | Time hh:mm | Range dB | Reading dB A | Record No. | Time hh:mm | Range dB | Reading dB A |
| 961 | 22:01 | 30-130 | 53.1 | 1010 | 22:50 | 30-130 | 53.3 | 1059 | 23:39 | 30-130 | 52.8 |
| 962 | 22:02 | 30-130 | 53.0 | 1011 | 22:51 | 30-130 | 53.2 | 1060 | 23:40 | 30-130 | 53.0 |
| 963 | 22:03 | 30-130 | 53.8 | 1012 | 22:52 | 30-130 | 53.4 | 1061 | 23:41 | 30-130 | 53.0 |
| 964 | 22:04 | 30-130 | 53.2 | 1013 | 22:53 | 30-130 | 53.2 | 1062 | 23:42 | 30-130 | 52.9 |
| 965 | 22:05 | 30-130 | 53.1 | 1014 | 22:54 | 30-130 | 53.4 | 1063 | 23:43 | 30-130 | 52.9 |
| 966 | 22:06 | 30-130 | 53.4 | 1015 | 22:55 | 30-130 | 52.9 | 1064 | 23:44 | 30-130 | 52.8 |
| 967 | 22:07 | 30-130 | 53.3 | 1016 | 22:56 | 30-130 | 53.1 | 1065 | 23:45 | 30-130 | 53.4 |
| 968 | 22:08 | 30-130 | 53.5 | 1017 | 22:57 | 30-130 | 53.3 | 1066 | 23:46 | 30-130 | 52.9 |
| 969 | 22:09 | 30-130 | 53.7 | 1018 | 22:58 | 30-130 | 53.2 | 1067 | 23:47 | 30-130 | 53.4 |
| 970 | 22:10 | 30-130 | 53.2 | 1019 | 22:59 | 30-130 | 53.4 | 1068 | 23:48 | 30-130 | 53.4 |
| 971 | 22:11 | 30-130 | 52.9 | 1020 | 23:00 | 30-130 | 53.7 | 1069 | 23:49 | 30-130 | 53.3 |
| 972 | 22:12 | 30-130 | 53.3 | 1021 | 23:01 | 30-130 | 53.4 | 1070 | 23:50 | 30-130 | 53.3 |
| 973 | 22:13 | 30-130 | 53.2 | 1022 | 23:02 | 30-130 | 53.2 | 1071 | 23:51 | 30-130 | 53.1 |
| 974 | 22:14 | 30-130 | 53.2 | 1023 | 23:03 | 30-130 | 53.3 | 1072 | 23:52 | 30-130 | 53.5 |
| 975 | 22:15 | 30-130 | 53.2 | 1024 | 23:04 | 30-130 | 53.3 | 1073 | 23:53 | 30-130 | 52.7 |
| 976 | 22:16 | 30-130 | 53.5 | 1025 | 23:05 | 30-130 | 53.5 | 1074 | 23:54 | 30-130 | 53.1 |
| 977 | 22:17 | 30-130 | 53.0 | 1026 | 23:06 | 30-130 | 52.9 | 1075 | 23:55 | 30-130 | 52.7 |
| 978 | 22:18 | 30-130 | 53.6 | 1027 | 23:07 | 30-130 | 53.1 | 1076 | 23:56 | 30-130 | 52.9 |
| 979 | 22:19 | 30-130 | 53.7 | 1028 | 23:08 | 30-130 | 53.3 | 1077 | 23:57 | 30-130 | 53.0 |
| 980 | 22:20 | 30-130 | 53.5 | 1029 | 23:09 | 30-130 | 52.7 | 1078 | 23:58 | 30-130 | 53.1 |
| 981 | 22:21 | 30-130 | 53.5 | 1030 | 23:10 | 30-130 | 53.3 | 1079 | 23:59 | 30-130 | 53.2 |
| 982 | 22:22 | 30-130 | 53.1 | 1031 | 23:11 | 30-130 | 52.8 | 1080 | 0:00 | 30-130 | 53.1 |
| 983 | 22:23 | 30-130 | 53.3 | 1032 | 23:12 | 30-130 | 53.3 | 1081 | 0:01 | 30-130 | 51.6 |
| 984 | 22:24 | 30-130 | 53.1 | 1033 | 23:13 | 30-130 | 53.4 | 1082 | 0:02 | 30-130 | 52.9 |
| 985 | 22:25 | 30-130 | 53.3 | 1034 | 23:14 | 30-130 | 53.2 | 1083 | 0:03 | 30-130 | 53.5 |
| 986 | 22:26 | 30-130 | 53.4 | 1035 | 23:15 | 30-130 | 52.8 | 1084 | 0:04 | 30-130 | 54.6 |
| 987 | 22:27 | 30-130 | 53.4 | 1036 | 23:16 | 30-130 | 53.4 | 1085 | 0:05 | 30-130 | 53.6 |
| 988 | 22:28 | 30-130 | 53.8 | 1037 | 23:17 | 30-130 | 52.7 | 1086 | 0:06 | 30-130 | 54.9 |
| 989 | 22:29 | 30-130 | 53.3 | 1038 | 23:18 | 30-130 | 53.4 | 1087 | 0:07 | 30-130 | 51.5 |
| 990 | 22:30 | 30-130 | 53.0 | 1039 | 23:19 | 30-130 | 52.9 | 1088 | 0:08 | 30-130 | 54.6 |
| 991 | 22:31 | 30-130 | 53.1 | 1040 | 23:20 | 30-130 | 53.2 | 1089 | 0:09 | 30-130 | 53.6 |
| 992 | 22:32 | 30-130 | 53.0 | 1041 | 23:21 | 30-130 | 53.4 | 1090 | 0:10 | 30-130 | 52.6 |
| 993 | 22:33 | 30-130 | 53.3 | 1042 | 23:22 | 30-130 | 52.8 | 1091 | 0:11 | 30-130 | 53.6 |
| 994 | 22:34 | 30-130 | 53.5 | 1043 | 23:23 | 30-130 | 53.4 | 1092 | 0:12 | 30-130 | 56.6 |
| 995 | 22:35 | 30-130 | 53.7 | 1044 | 23:24 | 30-130 | 53.0 | 1093 | 0:13 | 30-130 | 47.6 |
| 996 | 22:36 | 30-130 | 53.4 | 1045 | 23:25 | 30-130 | 52.9 | 1094 | 0:14 | 30-130 | 49.3 |
| 997 | 22:37 | 30-130 | 53.8 | 1046 | 23:26 | 30-130 | 52.8 | 1095 | 0:15 | 30-130 | 50.6 |
| 998 | 22:38 | 30-130 | 53.5 | 1047 | 23:27 | 30-130 | 53.0 | 1096 | 0:16 | 30-130 | 52.6 |
| 999 | 22:39 | 30-130 | 53.6 | 1048 | 23:28 | 30-130 | 53.1 | 1097 | 0:17 | 30-130 | 51.6 |
| 1000 | 22:40 | 30-130 | 53.3 | 1049 | 23:29 | 30-130 | 53.1 | 1098 | 0:18 | 30-130 | 52.3 |
| 1001 | 22:41 | 30-130 | 53.7 | 1050 | 23:30 | 30-130 | 52.9 | 1099 | 0:19 | 30-130 | 51.9 |
| 1002 | 22:42 | 30-130 | 53.1 | 1051 | 23:31 | 30-130 | 52.7 | 1100 | 0:20 | 30-130 | 51.6 |
| 1003 | 22:43 | 30-130 | 53.3 | 1052 | 23:32 | 30-130 | 53.4 | 1101 | 0:21 | 30-130 | 52.0 |
| 1004 | 22:44 | 30-130 | 53.7 | 1053 | 23:33 | 30-130 | 52.8 | 1102 | 0:22 | 30-130 | 51.2 |
| 1005 | 22:45 | 30-130 | 53.3 | 1054 | 23:34 | 30-130 | 53.1 | 1103 | 0:23 | 30-130 | 51.0 |
| 1006 | 22:46 | 30-130 | 53.1 | 1055 | 23:35 | 30-130 | 53.3 | 1104 | 0:24 | 30-130 | 52.3 |
| 1007 | 22:47 | 30-130 | 52.9 | 1056 | 23:36 | 30-130 | 53.0 | 1105 | 0:25 | 30-130 | 50.6 |
| 1008 | 22:48 | 30-130 | 53.2 | 1057 | 23:37 | 30-130 | 53.0 | 1106 | 0:26 | 30-130 | 52.0 |
| 1009 | 22:49 | 30-130 | 53.2 | 1058 | 23:38 | 30-130 | 53.5 | 1107 | 0:27 | 30-130 | 52.3 |

# BHARAT PETROLEUM CORPORATION LIMITED, BINA-M.P.

## NOISE MONITORING REPORT INSIDE GREEN BELT AREA

**Location-Tower No.5 Date-25/08/2023 July 2023 TO September 2023**

| NOISE MONITORING FOR NIGHT TIME (10:00 PM to 06:00 AM) | | | | | | | | | | | |
|---|---|---|---|---|---|---|---|---|---|---|---|
| Record No. | Time hh:mm | Range dB | Reading dB A | Record No. | Time hh:mm | Range dB | Reading dB A | Record No. | Time hh:mm | Range dB | Reading dB A |
| 1108 | 0:28 | 30-130 | 50.7 | 1157 | 1:17 | 30-130 | 51.2 | 1206 | 2:06 | 30-130 | 51.2 |
| 1109 | 0:29 | 30-130 | 50.7 | 1158 | 1:18 | 30-130 | 52.3 | 1207 | 2:07 | 30-130 | 52.0 |
| 1110 | 0:30 | 30-130 | 52.1 | 1159 | 1:19 | 30-130 | 51.2 | 1208 | 2:08 | 30-130 | 51.2 |
| 1111 | 0:31 | 30-130 | 50.3 | 1160 | 1:20 | 30-130 | 52.3 | 1209 | 2:09 | 30-130 | 51.2 |
| 1112 | 0:32 | 30-130 | 50.1 | 1161 | 1:21 | 30-130 | 51.5 | 1210 | 2:10 | 30-130 | 52.6 |
| 1113 | 0:33 | 30-130 | 49.7 | 1162 | 1:22 | 30-130 | 51.2 | 1211 | 2:11 | 30-130 | 53.6 |
| 1114 | 0:34 | 30-130 | 50.0 | 1163 | 1:23 | 30-130 | 52.0 | 1212 | 2:12 | 30-130 | 51.3 |
| 1115 | 0:35 | 30-130 | 49.8 | 1164 | 1:24 | 30-130 | 51.3 | 1213 | 2:13 | 30-130 | 53.6 |
| 1116 | 0:36 | 30-130 | 49.6 | 1165 | 1:25 | 30-130 | 53.5 | 1214 | 2:14 | 30-130 | 51.2 |
| 1117 | 0:37 | 30-130 | 49.9 | 1166 | 1:26 | 30-130 | 52.6 | 1215 | 2:15 | 30-130 | 52.3 |
| 1118 | 0:38 | 30-130 | 50.1 | 1167 | 1:27 | 30-130 | 53.4 | 1216 | 2:16 | 30-130 | 53.5 |
| 1119 | 0:39 | 30-130 | 51.4 | 1168 | 1:28 | 30-130 | 52.6 | 1217 | 2:17 | 30-130 | 52.6 |
| 1120 | 0:40 | 30-130 | 51.4 | 1169 | 1:29 | 30-130 | 53.4 | 1218 | 2:18 | 30-130 | 53.4 |
| 1121 | 0:41 | 30-130 | 52.5 | 1170 | 1:30 | 30-130 | 52.3 | 1219 | 2:19 | 30-130 | 51.3 |
| 1122 | 0:42 | 30-130 | 51.9 | 1171 | 1:31 | 30-130 | 52.6 | 1220 | 2:20 | 30-130 | 52.0 |
| 1123 | 0:43 | 30-130 | 51.9 | 1172 | 1:32 | 30-130 | 54.3 | 1221 | 2:21 | 30-130 | 53.6 |
| 1124 | 0:44 | 30-130 | 51.4 | 1173 | 1:33 | 30-130 | 53.6 | 1222 | 2:22 | 30-130 | 54.2 |
| 1125 | 0:45 | 30-130 | 51.5 | 1174 | 1:34 | 30-130 | 52.3 | 1223 | 2:23 | 30-130 | 53.2 |
| 1126 | 0:46 | 30-130 | 52.1 | 1175 | 1:35 | 30-130 | 52.0 | 1224 | 2:24 | 30-130 | 51.5 |
| 1127 | 0:47 | 30-130 | 51.4 | 1176 | 1:36 | 30-130 | 53.2 | 1225 | 2:25 | 30-130 | 53.6 |
| 1128 | 0:48 | 30-130 | 51.1 | 1177 | 1:37 | 30-130 | 52.3 | 1226 | 2:26 | 30-130 | 54.2 |
| 1129 | 0:49 | 30-130 | 51.1 | 1178 | 1:38 | 30-130 | 53.1 | 1227 | 2:27 | 30-130 | 52.3 |
| 1130 | 0:50 | 30-130 | 52.7 | 1179 | 1:39 | 30-130 | 52.3 | 1228 | 2:28 | 30-130 | 51.6 |
| 1131 | 0:51 | 30-130 | 51.3 | 1180 | 1:40 | 30-130 | 53.4 | 1229 | 2:29 | 30-130 | 52.3 |
| 1132 | 0:52 | 30-130 | 50.7 | 1181 | 1:41 | 30-130 | 51.6 | 1230 | 2:30 | 30-130 | 51.2 |
| 1133 | 0:53 | 30-130 | 50.7 | 1182 | 1:42 | 30-130 | 52.3 | 1231 | 2:31 | 30-130 | 52.3 |
| 1134 | 0:54 | 30-130 | 52.8 | 1183 | 1:43 | 30-130 | 53.2 | 1232 | 2:32 | 30-130 | 52.0 |
| 1135 | 0:55 | 30-130 | 52.1 | 1184 | 1:44 | 30-130 | 51.3 | 1233 | 2:33 | 30-130 | 51.2 |
| 1136 | 0:56 | 30-130 | 51.2 | 1185 | 1:45 | 30-130 | 53.6 | 1234 | 2:34 | 30-130 | 52.0 |
| 1137 | 0:57 | 30-130 | 51.9 | 1186 | 1:46 | 30-130 | 52.5 | 1235 | 2:35 | 30-130 | 52.3 |
| 1138 | 0:58 | 30-130 | 52.6 | 1187 | 1:47 | 30-130 | 54.0 | 1236 | 2:36 | 30-130 | 51.2 |
| 1139 | 0:59 | 30-130 | 52.6 | 1188 | 1:48 | 30-130 | 50.9 | 1237 | 2:37 | 30-130 | 52.6 |
| 1140 | 1:00 | 30-130 | 52.4 | 1189 | 1:49 | 30-130 | 51.8 | 1238 | 2:38 | 30-130 | 53.6 |
| 1141 | 1:01 | 30-130 | 52.4 | 1190 | 1:50 | 30-130 | 53.4 | 1239 | 2:39 | 30-130 | 54.2 |
| 1142 | 1:02 | 30-130 | 52.7 | 1191 | 1:51 | 30-130 | 52.6 | 1240 | 2:40 | 30-130 | 52.6 |
| 1143 | 1:03 | 30-130 | 51.6 | 1192 | 1:52 | 30-130 | 53.4 | 1241 | 2:41 | 30-130 | 53.6 |
| 1144 | 1:04 | 30-130 | 52.6 | 1193 | 1:53 | 30-130 | 53.6 | 1242 | 2:42 | 30-130 | 54.2 |
| 1145 | 1:05 | 30-130 | 51.2 | 1194 | 1:54 | 30-130 | 51.6 | 1243 | 2:43 | 30-130 | 52.3 |
| 1146 | 1:06 | 30-130 | 53.6 | 1195 | 1:55 | 30-130 | 52.6 | 1244 | 2:44 | 30-130 | 53.6 |
| 1147 | 1:07 | 30-130 | 51.6 | 1196 | 1:56 | 30-130 | 50.0 | 1245 | 2:45 | 30-130 | 54.2 |
| 1148 | 1:08 | 30-130 | 52.0 | 1197 | 1:57 | 30-130 | 50.9 | 1246 | 2:46 | 30-130 | 53.2 |
| 1149 | 1:09 | 30-130 | 51.2 | 1198 | 1:58 | 30-130 | 49.0 | 1247 | 2:47 | 30-130 | 51.2 |
| 1150 | 1:10 | 30-130 | 49.5 | 1199 | 1:59 | 30-130 | 50.0 | 1248 | 2:48 | 30-130 | 53.2 |
| 1151 | 1:11 | 30-130 | 52.0 | 1200 | 2:00 | 30-130 | 52.0 | 1249 | 2:49 | 30-130 | 55.6 |
| 1152 | 1:12 | 30-130 | 50.3 | 1201 | 2:01 | 30-130 | 54.6 | 1250 | 2:50 | 30-130 | 51.2 |
| 1153 | 1:13 | 30-130 | 50.2 | 1202 | 2:02 | 30-130 | 55.8 | 1251 | 2:51 | 30-130 | 52.3 |
| 1154 | 1:14 | 30-130 | 51.2 | 1203 | 2:03 | 30-130 | 51.6 | 1252 | 2:52 | 30-130 | 53.6 |
| 1155 | 1:15 | 30-130 | 52.0 | 1204 | 2:04 | 30-130 | 54.6 | 1253 | 2:53 | 30-130 | 51.3 |
| 1156 | 1:16 | 30-130 | 50.3 | 1205 | 2:05 | 30-130 | 53.6 | 1254 | 2:54 | 30-130 | 52.3 |

# BHARAT PETROLEUM CORPORATION LIMITED, BINA-M.P.

## NOISE MONITORING REPORT INSIDE GREEN BELT AREA

**Location-Tower No.5 Date-25/08/2023 July 2023 TO September 2023**

| NOISE MONITORING FOR NIGHT TIME (10:00 PM to 06:00 AM) | | | | | | | | | | | |
|---|---|---|---|---|---|---|---|---|---|---|---|
| Record No. | Time hh:mm | Range dB | Reading dB A | Record No. | Time hh:mm | Range dB | Reading dB A | Record No. | Time hh:mm | Range dB | Reading dB A |
| 1255 | 2:55 | 30-130 | 52.6 | 1304 | 3:44 | 30-130 | 50.2 | 1353 | 4:33 | 30-130 | 51.2 |
| 1256 | 2:56 | 30-130 | 53.2 | 1305 | 3:45 | 30-130 | 48.5 | 1354 | 4:34 | 30-130 | 49.6 |
| 1257 | 2:57 | 30-130 | 52.1 | 1306 | 3:46 | 30-130 | 48.3 | 1355 | 4:35 | 30-130 | 48.6 |
| 1258 | 2:58 | 30-130 | 53.2 | 1307 | 3:47 | 30-130 | 48.6 | 1356 | 4:36 | 30-130 | 48.2 |
| 1259 | 2:59 | 30-130 | 51.6 | 1308 | 3:48 | 30-130 | 50.3 | 1357 | 4:37 | 30-130 | 51.2 |
| 1260 | 3:00 | 30-130 | 53.6 | 1309 | 3:49 | 30-130 | 51.2 | 1358 | 4:38 | 30-130 | 51.2 |
| 1261 | 3:01 | 30-130 | 54.9 | 1310 | 3:50 | 30-130 | 51.2 | 1359 | 4:39 | 30-130 | 50.3 |
| 1262 | 3:02 | 30-130 | 55.0 | 1311 | 3:51 | 30-130 | 50.3 | 1360 | 4:40 | 30-130 | 49.0 |
| 1263 | 3:03 | 30-130 | 54.6 | 1312 | 3:52 | 30-130 | 51.2 | 1361 | 4:41 | 30-130 | 48.6 |
| 1264 | 3:04 | 30-130 | 53.6 | 1313 | 3:53 | 30-130 | 50.2 | 1362 | 4:42 | 30-130 | 48.7 |
| 1265 | 3:05 | 30-130 | 52.6 | 1314 | 3:54 | 30-130 | 51.2 | 1363 | 4:43 | 30-130 | 51.2 |
| 1266 | 3:06 | 30-130 | 53.1 | 1315 | 3:55 | 30-130 | 52.0 | 1364 | 4:44 | 30-130 | 49.6 |
| 1267 | 3:07 | 30-130 | 52.6 | 1316 | 3:56 | 30-130 | 51.2 | 1365 | 4:46 | 30-130 | 51.2 |
| 1268 | 3:08 | 30-130 | 53.4 | 1317 | 3:57 | 30-130 | 50.3 | 1366 | 4:47 | 30-130 | 51.9 |
| 1269 | 3:09 | 30-130 | 52.6 | 1318 | 3:58 | 30-130 | 51.2 | 1367 | 4:48 | 30-130 | 51.1 |
| 1270 | 3:10 | 30-130 | 52.1 | 1319 | 3:59 | 30-130 | 50.2 | 1368 | 4:49 | 30-130 | 49.6 |
| 1271 | 3:11 | 30-130 | 53.2 | 1320 | 4:00 | 30-130 | 51.2 | 1369 | 4:50 | 30-130 | 50.2 |
| 1272 | 3:12 | 30-130 | 52.6 | 1321 | 4:01 | 30-130 | 51.2 | 1370 | 4:51 | 30-130 | 50.3 |
| 1273 | 3:13 | 30-130 | 52.6 | 1322 | 4:02 | 30-130 | 50.3 | 1371 | 4:52 | 30-130 | 51.2 |
| 1274 | 3:14 | 30-130 | 53.6 | 1323 | 4:03 | 30-130 | 51.2 | 1372 | 4:53 | 30-130 | 51.2 |
| 1275 | 3:15 | 30-130 | 51.6 | 1324 | 4:04 | 30-130 | 51.3 | 1373 | 4:54 | 30-130 | 53.2 |
| 1276 | 3:16 | 30-130 | 53.6 | 1325 | 4:05 | 30-130 | 51.3 | 1374 | 4:55 | 30-130 | 52.1 |
| 1277 | 3:17 | 30-130 | 55.6 | 1326 | 4:06 | 30-130 | 50.3 | 1375 | 4:55 | 30-130 | 53.2 |
| 1278 | 3:18 | 30-130 | 52.3 | 1327 | 4:07 | 30-130 | 53.2 | 1376 | 4:56 | 30-130 | 51.6 |
| 1279 | 3:19 | 30-130 | 54.8 | 1328 | 4:08 | 30-130 | 50.3 | 1377 | 4:57 | 30-130 | 53.6 |
| 1280 | 3:20 | 30-130 | 54.5 | 1329 | 4:09 | 30-130 | 49.6 | 1378 | 4:58 | 30-130 | 48.2 |
| 1281 | 3:21 | 30-130 | 52.6 | 1330 | 4:10 | 30-130 | 48.4 | 1379 | 4:59 | 30-130 | 48.6 |
| 1282 | 3:22 | 30-130 | 51.3 | 1331 | 4:11 | 30-130 | 48.3 | 1380 | 5:00 | 30-130 | 48.3 |
| 1283 | 3:23 | 30-130 | 52.3 | 1332 | 4:12 | 30-130 | 51.2 | 1381 | 5:01 | 30-130 | 51.1 |
| 1284 | 3:24 | 30-130 | 53.6 | 1333 | 4:13 | 30-130 | 49.3 | 1382 | 5:02 | 30-130 | 48.0 |
| 1285 | 3:25 | 30-130 | 52.4 | 1334 | 4:14 | 30-130 | 48.6 | 1383 | 5:03 | 30-130 | 48.3 |
| 1286 | 3:26 | 30-130 | 50.0 | 1335 | 4:15 | 30-130 | 51.6 | 1384 | 5:04 | 30-130 | 55.9 |
| 1287 | 3:27 | 30-130 | 52.3 | 1336 | 4:16 | 30-130 | 52.6 | 1385 | 5:05 | 30-130 | 52.6 |
| 1288 | 3:28 | 30-130 | 51.2 | 1337 | 4:17 | 30-130 | 50.0 | 1386 | 5:06 | 30-130 | 52.6 |
| 1289 | 3:29 | 30-130 | 51.6 | 1338 | 4:18 | 30-130 | 50.9 | 1387 | 5:07 | 30-130 | 53.2 |
| 1290 | 3:30 | 30-130 | 53.6 | 1339 | 4:19 | 30-130 | 49.0 | 1388 | 5:08 | 30-130 | 52.6 |
| 1291 | 3:31 | 30-130 | 52.3 | 1340 | 4:20 | 30-130 | 50.0 | 1389 | 5:09 | 30-130 | 51.6 |
| 1292 | 3:32 | 30-130 | 51.2 | 1341 | 4:21 | 30-130 | 52.0 | 1390 | 5:10 | 30-130 | 52.6 |
| 1293 | 3:33 | 30-130 | 52.6 | 1342 | 4:22 | 30-130 | 51.2 | 1391 | 5:11 | 30-130 | 53.6 |
| 1294 | 3:34 | 30-130 | 53.0 | 1343 | 4:23 | 30-130 | 52.3 | 1392 | 5:12 | 30-130 | 51.6 |
| 1295 | 3:35 | 30-130 | 52.3 | 1344 | 4:24 | 30-130 | 51.6 | 1393 | 5:13 | 30-130 | 53.6 |
| 1296 | 3:36 | 30-130 | 51.2 | 1345 | 4:25 | 30-130 | 54.6 | 1394 | 5:14 | 30-130 | 52.0 |
| 1297 | 3:37 | 30-130 | 52.0 | 1346 | 4:26 | 30-130 | 53.6 | 1395 | 5:15 | 30-130 | 52.3 |
| 1298 | 3:38 | 30-130 | 52.3 | 1347 | 4:27 | 30-130 | 52.6 | 1396 | 5:16 | 30-130 | 51.6 |
| 1299 | 3:39 | 30-130 | 51.3 | 1348 | 4:28 | 30-130 | 52.6 | 1397 | 5:17 | 30-130 | 52.3 |
| 1300 | 3:40 | 30-130 | 53.3 | 1349 | 4:29 | 30-130 | 52.6 | 1398 | 5:18 | 30-130 | 51.2 |
| 1301 | 3:41 | 30-130 | 51.6 | 1350 | 4:30 | 30-130 | 54.6 | 1399 | 5:19 | 30-130 | 51.3 |
| 1302 | 3:42 | 30-130 | 52.1 | 1351 | 4:31 | 30-130 | 52.3 | 1400 | 5:20 | 30-130 | 50.6 |
| 1303 | 3:43 | 30-130 | 52.3 | 1352 | 4:32 | 30-130 | 53.2 | 1401 | 5:21 | 30-130 | 51.3 |

# BHARAT PETROLEUM CORPORATION LIMITED, BINA-M.P.

## NOISE MONITORING REPORT INSIDE GREEN BELT AREA

**Location-Tower No.5 Date-25/08/2023 July 2023 TO September 2023**

| NOISE MONITORING FOR NIGHT TIME (10:00 PM to 06:00 AM) | | | |
|---|---|---|---|
| Record No. | Time hh:mm | Range dB | Reading dB A |
| 1402 | 5:22 | 30-130 | 51.2 |
| 1403 | 5:23 | 30-130 | 52.0 |
| 1404 | 5:24 | 30-130 | 51.3 |
| 1405 | 5:25 | 30-130 | 52.0 |
| 1406 | 5:26 | 30-130 | 52.3 |
| 1407 | 5:27 | 30-130 | 52.0 |
| 1408 | 5:28 | 30-130 | 52.0 |
| 1409 | 5:29 | 30-130 | 50.3 |
| 1410 | 5:30 | 30-130 | 52.1 |
| 1411 | 5:31 | 30-130 | 53.0 |
| 1412 | 5:32 | 30-130 | 51.2 |
| 1413 | 5:33 | 30-130 | 50.3 |
| 1414 | 5:34 | 30-130 | 50.4 |
| 1415 | 5:35 | 30-130 | 52.0 |
| 1416 | 5:36 | 30-130 | 50.3 |
| 1417 | 5:37 | 30-130 | 51.2 |
| 1418 | 5:38 | 30-130 | 52.0 |
| 1419 | 5:39 | 30-130 | 50.6 |
| 1420 | 5:40 | 30-130 | 51.2 |
| 1421 | 5:41 | 30-130 | 52.0 |
| 1422 | 5:42 | 30-130 | 50.6 |
| 1423 | 5:43 | 30-130 | 52.0 |
| 1424 | 5:44 | 30-130 | 50.3 |
| 1425 | 5:45 | 30-130 | 52.3 |
| 1426 | 4:46 | 30-130 | 51.2 |
| 1427 | 5:47 | 30-130 | 50.1 |
| 1428 | 5:48 | 30-130 | 51.2 |
| 1429 | 5:49 | 30-130 | 48.6 |
| 1430 | 5:50 | 30-130 | 48.6 |
| 1431 | 5:51 | 30-130 | 48.3 |
| 1432 | 5:52 | 30-130 | 49.3 |
| 1433 | 5:53 | 30-130 | 50.1 |
| 1434 | 5:54 | 30-130 | 48.3 |
| 1435 | 5:55 | 30-130 | 50.2 |
| 1436 | 5:56 | 30-130 | 51.3 |
| 1437 | 5:57 | 30-130 | 50.3 |
| 1438 | 5:58 | 30-130 | 50.2 |
| 1439 | 5:59 | 30-130 | 49.2 |
| 1440 | 6:00 | 30-130 | 48.3 |

# BHARAT PETROLEUM CORPORATION LIMITED, BINA-M.P.

## NOISE MONITORING REPORT INSIDE GREEN BELT AREA

**Location-Tower No.7 Date-28/08/2023 July 2023 TO September 2023**

| NOISE MONITORING FOR DAY TIME (06:00 AM to 10:00 PM) | | | | | | | | | | | |
|---|---|---|---|---|---|---|---|---|---|---|---|
| Record No. | Time hh:mm | Range dB | Reading dB A | Record No. | Time hh:mm | Range dB | Reading dB A | Record No. | Time hh:mm | Range dB | Reading dB A |
| 1 | 6:01 | 30-130 | 61.3 | 50 | 6:50 | 30-130 | 60.3 | 99 | 7:39 | 30-130 | 60.7 |
| 2 | 6:02 | 30-130 | 62.2 | 51 | 6:51 | 30-130 | 61.2 | 100 | 7:40 | 30-130 | 60.9 |
| 3 | 6:03 | 30-130 | 59.6 | 52 | 6:52 | 30-130 | 60.3 | 101 | 7:41 | 30-130 | 61.8 |
| 4 | 6:04 | 30-130 | 59.4 | 53 | 6:53 | 30-130 | 61.3 | 102 | 7:42 | 30-130 | 60.9 |
| 5 | 6:05 | 30-130 | 61.6 | 54 | 6:54 | 30-130 | 62.1 | 103 | 7:43 | 30-130 | 61.4 |
| 6 | 6:06 | 30-130 | 59.4 | 55 | 6:55 | 30-130 | 60.6 | 104 | 7:44 | 30-130 | 60.3 |
| 7 | 6:07 | 30-130 | 59.3 | 56 | 6:56 | 30-130 | 59.4 | 105 | 7:45 | 30-130 | 62.4 |
| 8 | 6:08 | 30-130 | 59.9 | 57 | 6:57 | 30-130 | 58.6 | 106 | 7:46 | 30-130 | 60.3 |
| 9 | 6:09 | 30-130 | 62.0 | 58 | 6:58 | 30-130 | 60.7 | 107 | 7:47 | 30-130 | 61.2 |
| 10 | 6:10 | 30-130 | 61.1 | 59 | 6:59 | 30-130 | 60.9 | 108 | 7:48 | 30-130 | 62.3 |
| 11 | 6:11 | 30-130 | 60.3 | 60 | 7:00 | 30-130 | 61.8 | 109 | 7:49 | 30-130 | 61.9 |
| 12 | 6:12 | 30-130 | 60.7 | 61 | 7:01 | 30-130 | 62.0 | 110 | 7:50 | 30-130 | 63.8 |
| 13 | 6:13 | 30-130 | 59.8 | 62 | 7:02 | 30-130 | 60.4 | 111 | 7:51 | 30-130 | 61.6 |
| 14 | 6:14 | 30-130 | 59.3 | 63 | 7:03 | 30-130 | 62.8 | 112 | 7:52 | 30-130 | 60.4 |
| 15 | 6:15 | 30-130 | 60.6 | 64 | 7:04 | 30-130 | 60.9 | 113 | 7:53 | 30-130 | 61.9 |
| 16 | 6:16 | 30-130 | 61.6 | 65 | 7:05 | 30-130 | 62.7 | 114 | 7:54 | 30-130 | 62.0 |
| 17 | 6:17 | 30-130 | 60.0 | 66 | 7:06 | 30-130 | 63.8 | 115 | 7:55 | 30-130 | 62.6 |
| 18 | 6:18 | 30-130 | 62.0 | 67 | 7:07 | 30-130 | 64.9 | 116 | 7:56 | 30-130 | 60.0 |
| 19 | 6:19 | 30-130 | 60.7 | 68 | 7:08 | 30-130 | 59.0 | 117 | 7:57 | 30-130 | 60.6 |
| 20 | 6:20 | 30-130 | 61.3 | 69 | 7:09 | 30-130 | 60.3 | 118 | 7:58 | 30-130 | 59.4 |
| 21 | 6:21 | 30-130 | 60.9 | 70 | 7:10 | 30-130 | 60.9 | 119 | 7:59 | 30-130 | 62.6 |
| 22 | 6:22 | 30-130 | 59.9 | 71 | 7:11 | 30-130 | 61.4 | 120 | 8:00 | 30-130 | 60.5 |
| 23 | 6:23 | 30-130 | 59.5 | 72 | 7:12 | 30-130 | 62.8 | 121 | 8:01 | 30-130 | 56.6 |
| 24 | 6:24 | 30-130 | 59.3 | 73 | 7:13 | 30-130 | 60.9 | 122 | 8:02 | 30-130 | 57.4 |
| 25 | 6:25 | 30-130 | 62.8 | 74 | 7:14 | 30-130 | 60.7 | 123 | 8:03 | 30-130 | 58.0 |
| 26 | 6:26 | 30-130 | 61.5 | 75 | 7:15 | 30-130 | 60.3 | 124 | 8:04 | 30-130 | 57.2 |
| 27 | 6:27 | 30-130 | 59.6 | 76 | 7:16 | 30-130 | 61.3 | 125 | 8:05 | 30-130 | 56.4 |
| 28 | 6:28 | 30-130 | 60.3 | 77 | 7:17 | 30-130 | 62.1 | 126 | 8:06 | 30-130 | 57.8 |
| 29 | 6:29 | 30-130 | 59.5 | 78 | 7:18 | 30-130 | 60.6 | 127 | 8:07 | 30-130 | 58.9 |
| 30 | 6:30 | 30-130 | 58.3 | 79 | 7:19 | 30-130 | 60.4 | 128 | 8:08 | 30-130 | 59.3 |
| 31 | 6:31 | 30-130 | 60.4 | 80 | 7:20 | 30-130 | 61.6 | 129 | 8:09 | 30-130 | 59.4 |
| 32 | 6:32 | 30-130 | 59.0 | 81 | 7:21 | 30-130 | 60.7 | 130 | 8:10 | 30-130 | 59.3 |
| 33 | 6:33 | 30-130 | 60.9 | 82 | 7:22 | 30-130 | 60.9 | 131 | 8:11 | 30-130 | 57.5 |
| 34 | 6:34 | 30-130 | 61.9 | 83 | 7:23 | 30-130 | 61.8 | 132 | 8:12 | 30-130 | 58.4 |
| 35 | 6:35 | 30-130 | 60.5 | 84 | 7:24 | 30-130 | 60.4 | 133 | 8:13 | 30-130 | 59.1 |
| 36 | 6:36 | 30-130 | 61.6 | 85 | 7:25 | 30-130 | 60.1 | 134 | 8:14 | 30-130 | 56.8 |
| 37 | 6:37 | 30-130 | 59.2 | 86 | 7:26 | 30-130 | 61.2 | 135 | 8:15 | 30-130 | 57.8 |
| 38 | 6:38 | 30-130 | 58.6 | 87 | 7:27 | 30-130 | 61.9 | 136 | 8:16 | 30-130 | 59.0 |
| 39 | 6:39 | 30-130 | 59.1 | 88 | 7:28 | 30-130 | 60.4 | 137 | 8:17 | 30-130 | 60.2 |
| 40 | 6:40 | 30-130 | 59.8 | 89 | 7:29 | 30-130 | 63.8 | 138 | 8:18 | 30-130 | 61.4 |
| 41 | 6:41 | 30-130 | 59.5 | 90 | 7:30 | 30-130 | 62.1 | 139 | 8:19 | 30-130 | 59.3 |
| 42 | 6:42 | 30-130 | 61.7 | 91 | 7:31 | 30-130 | 61.9 | 140 | 8:20 | 30-130 | 60.4 |
| 43 | 6:43 | 30-130 | 62.5 | 92 | 7:32 | 30-130 | 60.3 | 141 | 8:21 | 30-130 | 58.9 |
| 44 | 6:44 | 30-130 | 64.9 | 93 | 7:33 | 30-130 | 60.9 | 142 | 8:22 | 30-130 | 58.4 |
| 45 | 6:45 | 30-130 | 62.7 | 94 | 7:34 | 30-130 | 61.3 | 143 | 8:23 | 30-130 | 59.4 |
| 46 | 6:46 | 30-130 | 59.1 | 95 | 7:35 | 30-130 | 62.1 | 144 | 8:24 | 30-130 | 58.7 |
| 47 | 6:47 | 30-130 | 59.4 | 96 | 7:36 | 30-130 | 60.6 | 145 | 8:25 | 30-130 | 57.8 |
| 48 | 6:48 | 30-130 | 58.6 | 97 | 7:37 | 30-130 | 62.4 | 146 | 8:26 | 30-130 | 59.4 |
| 49 | 6:49 | 30-130 | 59.2 | 98 | 7:38 | 30-130 | 61.6 | 147 | 8:27 | 30-130 | 56.7 |

# BHARAT PETROLEUM CORPORATION LIMITED, BINA-M.P.

## NOISE MONITORING REPORT INSIDE GREEN BELT AREA

**Location-Tower No.7 Date-28/08/2023 July 2023 TO September 2023**

| NOISE MONITORING FOR DAY TIME (06:00 AM to 10:00 PM) | | | | | | | | | | | |
|---|---|---|---|---|---|---|---|---|---|---|---|
| Record No. | Time hh:mm | Range dB | Reading dB A | Record No. | Time hh:mm | Range dB | Reading dB A | Record No. | Time hh:mm | Range dB | Reading dB A |
| 148 | 8:28 | 30-130 | 58.4 | 197 | 9:17 | 30-130 | 61.8 | 246 | 10:06 | 30-130 | 61.4 |
| 149 | 8:29 | 30-130 | 58.6 | 198 | 9:18 | 30-130 | 62.6 | 247 | 10:07 | 30-130 | 59.3 |
| 150 | 8:30 | 30-130 | 56.8 | 199 | 9:19 | 30-130 | 61.8 | 248 | 10:08 | 30-130 | 59.9 |
| 151 | 8:31 | 30-130 | 57.4 | 200 | 9:20 | 30-130 | 61.6 | 249 | 10:09 | 30-130 | 62.0 |
| 152 | 8:32 | 30-130 | 57.8 | 201 | 9:21 | 30-130 | 60.8 | 250 | 10:10 | 30-130 | 61.1 |
| 153 | 8:33 | 30-130 | 56.8 | 202 | 9:22 | 30-130 | 61.7 | 251 | 10:11 | 30-130 | 60.3 |
| 154 | 8:34 | 30-130 | 59.4 | 203 | 9:23 | 30-130 | 60.9 | 252 | 10:12 | 30-130 | 60.7 |
| 155 | 8:35 | 30-130 | 56.4 | 204 | 9:24 | 30-130 | 63.4 | 253 | 10:13 | 30-130 | 59.8 |
| 156 | 8:36 | 30-130 | 57.4 | 205 | 9:25 | 30-130 | 63.1 | 254 | 10:14 | 30-130 | 59.3 |
| 157 | 8:37 | 30-130 | 58.6 | 206 | 9:26 | 30-130 | 61.2 | 255 | 10:15 | 30-130 | 60.6 |
| 158 | 8:38 | 30-130 | 59.4 | 207 | 9:27 | 30-130 | 62.9 | 256 | 10:16 | 30-130 | 61.6 |
| 159 | 8:39 | 30-130 | 56.8 | 208 | 9:28 | 30-130 | 63.4 | 257 | 10:17 | 30-130 | 60.0 |
| 160 | 8:40 | 30-130 | 56.9 | 209 | 9:29 | 30-130 | 62.8 | 258 | 10:18 | 30-130 | 62.0 |
| 161 | 8:41 | 30-130 | 57.3 | 210 | 9:30 | 30-130 | 61.1 | 259 | 10:19 | 30-130 | 60.7 |
| 162 | 8:42 | 30-130 | 57.8 | 211 | 9:31 | 30-130 | 62.9 | 260 | 10:20 | 30-130 | 61.3 |
| 163 | 8:43 | 30-130 | 59.4 | 212 | 9:32 | 30-130 | 62.3 | 261 | 10:21 | 30-130 | 60.9 |
| 164 | 8:44 | 30-130 | 59.5 | 213 | 9:33 | 30-130 | 61.1 | 262 | 10:22 | 30-130 | 59.9 |
| 165 | 8:45 | 30-130 | 56.7 | 214 | 9:34 | 30-130 | 62.8 | 263 | 10:23 | 30-130 | 59.5 |
| 166 | 8:46 | 30-130 | 57.8 | 215 | 9:35 | 30-130 | 61.3 | 264 | 10:24 | 30-130 | 59.3 |
| 167 | 8:47 | 30-130 | 58.6 | 216 | 3:36 | 30-130 | 62.5 | 265 | 10:25 | 30-130 | 62.8 |
| 168 | 8:48 | 30-130 | 56.6 | 217 | 9:37 | 30-130 | 61.9 | 266 | 10:26 | 30-130 | 61.5 |
| 169 | 8:49 | 30-130 | 58.4 | 218 | 9:38 | 30-130 | 60.7 | 267 | 10:27 | 30-130 | 59.6 |
| 170 | 8:50 | 30-130 | 56.6 | 219 | 9:39 | 30-130 | 59.3 | 268 | 10:28 | 30-130 | 60.3 |
| 171 | 8:51 | 30-130 | 57.6 | 220 | 9:40 | 30-130 | 63.4 | 269 | 10:29 | 30-130 | 59.5 |
| 172 | 8:52 | 30-130 | 56.9 | 221 | 9:41 | 30-130 | 60.7 | 270 | 10:30 | 30-130 | 58.3 |
| 173 | 8:53 | 30-130 | 57.6 | 222 | 9:42 | 30-130 | 60.9 | 271 | 10:31 | 30-130 | 60.4 |
| 174 | 8:54 | 30-130 | 56.6 | 223 | 9:43 | 30-130 | 61.4 | 272 | 10:32 | 30-130 | 59.0 |
| 175 | 8:55 | 30-130 | 55.6 | 224 | 9:44 | 30-130 | 61.3 | 273 | 10:33 | 30-130 | 60.9 |
| 176 | 8:56 | 30-130 | 57.6 | 225 | 9:45 | 30-130 | 62.4 | 274 | 10:34 | 30-130 | 61.9 |
| 177 | 8:57 | 30-130 | 56.5 | 226 | 9:46 | 30-130 | 60.3 | 275 | 10:35 | 30-130 | 60.5 |
| 178 | 8:58 | 30-130 | 57.5 | 227 | 9:47 | 30-130 | 61.2 | 276 | 10:36 | 30-130 | 61.6 |
| 179 | 8:59 | 30-130 | 58.6 | 228 | 9:48 | 30-130 | 62.3 | 277 | 10:37 | 30-130 | 59.2 |
| 180 | 9:00 | 30-130 | 57.6 | 229 | 9:49 | 30-130 | 61.9 | 278 | 10:38 | 30-130 | 58.6 |
| 181 | 9:01 | 30-130 | 62.0 | 230 | 9:50 | 30-130 | 62.8 | 279 | 10:39 | 30-130 | 59.1 |
| 182 | 9:02 | 30-130 | 60.4 | 231 | 9:51 | 30-130 | 61.6 | 280 | 10:40 | 30-130 | 59.8 |
| 183 | 9:03 | 30-130 | 62.8 | 232 | 9:52 | 30-130 | 64.4 | 281 | 10:41 | 30-130 | 59.5 |
| 184 | 9:04 | 30-130 | 60.9 | 233 | 9:53 | 30-130 | 61.9 | 282 | 10:42 | 30-130 | 61.7 |
| 185 | 9:05 | 30-130 | 62.7 | 234 | 9:54 | 30-130 | 62.0 | 283 | 10:43 | 30-130 | 62.5 |
| 186 | 9:06 | 30-130 | 63.8 | 235 | 9:55 | 30-130 | 61.6 | 284 | 10:44 | 30-130 | 64.9 |
| 187 | 9:07 | 30-130 | 64.9 | 236 | 9:56 | 30-130 | 62.0 | 285 | 10:45 | 30-130 | 62.7 |
| 188 | 9:08 | 30-130 | 63.0 | 237 | 9:57 | 30-130 | 62.6 | 286 | 10:46 | 30-130 | 59.1 |
| 189 | 9:09 | 30-130 | 60.3 | 238 | 9:58 | 30-130 | 62.4 | 287 | 10:47 | 30-130 | 59.4 |
| 190 | 9:10 | 30-130 | 60.9 | 239 | 9:59 | 30-130 | 63.6 | 288 | 10:48 | 30-130 | 58.6 |
| 191 | 9:11 | 30-130 | 61.4 | 240 | 10:00 | 30-130 | 63.5 | 289 | 10:49 | 30-130 | 59.2 |
| 192 | 9:12 | 30-130 | 62.8 | 241 | 10:01 | 30-130 | 61.3 | 290 | 10:50 | 30-130 | 60.3 |
| 193 | 9:13 | 30-130 | 60.9 | 242 | 10:02 | 30-130 | 62.2 | 291 | 10:51 | 30-130 | 61.2 |
| 194 | 9:14 | 30-130 | 60.7 | 243 | 10:03 | 30-130 | 63.6 | 292 | 10:52 | 30-130 | 60.3 |
| 195 | 9:15 | 30-130 | 60.8 | 244 | 10:04 | 30-130 | 62.4 | 293 | 10:53 | 30-130 | 61.3 |
| 196 | 9:16 | 30-130 | 61.9 | 245 | 10:05 | 30-130 | 61.6 | 294 | 10:54 | 30-130 | 62.1 |

# BHARAT PETROLEUM CORPORATION LIMITED, BINA-M.P.

## NOISE MONITORING REPORT INSIDE GREEN BELT AREA

**Location-Tower No.7 Date-28/08/2023 July 2023 TO September 2023**

| NOISE MONITORING FOR DAY TIME (06:00 AM to 10:00 PM) | | | | | | | | | | | |
|---|---|---|---|---|---|---|---|---|---|---|---|
| Record No. | Time hh:mm | Range dB | Reading dB A | Record No. | Time hh:mm | Range dB | Reading dB A | Record No. | Time hh:mm | Range dB | Reading dB A |
| 295 | 10:55 | 30-130 | 60.6 | 344 | 11:44 | 30-130 | 64.9 | 393 | 12:33 | 30-130 | 58.9 |
| 296 | 10:56 | 30-130 | 59.4 | 345 | 11:45 | 30-130 | 62.7 | 394 | 12:34 | 30-130 | 57.4 |
| 297 | 10:57 | 30-130 | 58.6 | 346 | 11:46 | 30-130 | 59.1 | 395 | 12:35 | 30-130 | 56.0 |
| 298 | 10:58 | 30-130 | 60.7 | 347 | 11:47 | 30-130 | 59.4 | 396 | 12:36 | 30-130 | 57.9 |
| 299 | 10:59 | 30-130 | 60.9 | 348 | 11:48 | 30-130 | 59.6 | 397 | 12:37 | 30-130 | 58.9 |
| 300 | 11:00 | 30-130 | 61.8 | 349 | 11:49 | 30-130 | 59.2 | 398 | 12:38 | 30-130 | 58.5 |
| 301 | 11:01 | 30-130 | 61.3 | 350 | 11:50 | 30-130 | 60.3 | 399 | 12:39 | 30-130 | 57.5 |
| 302 | 11:02 | 30-130 | 62.2 | 351 | 11:51 | 30-130 | 61.2 | 400 | 12:40 | 30-130 | 56.2 |
| 303 | 11:03 | 30-130 | 59.6 | 352 | 11:52 | 30-130 | 60.3 | 401 | 12:41 | 30-130 | 57.6 |
| 304 | 11:04 | 30-130 | 59.4 | 353 | 11:53 | 30-130 | 61.3 | 402 | 12:42 | 30-130 | 53.1 |
| 305 | 11:05 | 30-130 | 61.6 | 354 | 11:54 | 30-130 | 62.1 | 403 | 12:43 | 30-130 | 57.8 |
| 306 | 11:06 | 30-130 | 59.4 | 355 | 11:55 | 30-130 | 60.6 | 404 | 12:44 | 30-130 | 56.5 |
| 307 | 11:07 | 30-130 | 59.3 | 356 | 11:56 | 30-130 | 59.4 | 405 | 12:45 | 30-130 | 54.7 |
| 308 | 11:08 | 30-130 | 59.9 | 357 | 11:57 | 30-130 | 62.6 | 406 | 12:46 | 30-130 | 56.5 |
| 309 | 11:09 | 30-130 | 62.0 | 358 | 11:58 | 30-130 | 60.7 | 407 | 12:47 | 30-130 | 56.9 |
| 310 | 11:10 | 30-130 | 61.1 | 359 | 11:59 | 30-130 | 60.9 | 408 | 12:48 | 30-130 | 55.7 |
| 311 | 11:11 | 30-130 | 60.3 | 360 | 12:00 | 30-130 | 61.8 | 409 | 12:49 | 30-130 | 56.1 |
| 312 | 11:12 | 30-130 | 60.7 | 361 | 12:01 | 30-130 | 62.6 | 410 | 12:50 | 30-130 | 56.6 |
| 313 | 11:13 | 30-130 | 59.8 | 362 | 12:02 | 30-130 | 62.4 | 411 | 12:51 | 30-130 | 58.4 |
| 314 | 11:14 | 30-130 | 59.3 | 363 | 12:03 | 30-130 | 60.6 | 412 | 12:52 | 30-130 | 56.6 |
| 315 | 11:15 | 30-130 | 60.6 | 364 | 12:04 | 30-130 | 61.8 | 413 | 12:53 | 30-130 | 57.6 |
| 316 | 11:16 | 30-130 | 61.6 | 365 | 12:05 | 30-130 | 60.7 | 414 | 12:54 | 30-130 | 56.9 |
| 317 | 11:17 | 30-130 | 60.0 | 366 | 12:06 | 30-130 | 62.6 | 415 | 12:55 | 30-130 | 57.6 |
| 318 | 11:18 | 30-130 | 62.0 | 367 | 12:07 | 30-130 | 61.4 | 416 | 12:56 | 30-130 | 56.6 |
| 319 | 11:19 | 30-130 | 60.7 | 368 | 12:08 | 30-130 | 63.6 | 417 | 12:57 | 30-130 | 55.6 |
| 320 | 11:20 | 30-130 | 61.3 | 369 | 12:09 | 30-130 | 64.4 | 418 | 12:58 | 30-130 | 57.6 |
| 321 | 11:21 | 30-130 | 60.9 | 370 | 12:10 | 30-130 | 57.6 | 419 | 12:59 | 30-130 | 56.5 |
| 322 | 11:22 | 30-130 | 61.9 | 371 | 12:11 | 30-130 | 56.6 | 420 | 13:00 | 30-130 | 57.5 |
| 323 | 11:23 | 30-130 | 59.5 | 372 | 12:12 | 30-130 | 57.3 | 421 | 13:01 | 30-130 | 56.6 |
| 324 | 11:24 | 30-130 | 61.3 | 373 | 12:13 | 30-130 | 56.8 | 422 | 13:02 | 30-130 | 57.4 |
| 325 | 11:25 | 30-130 | 62.8 | 374 | 12:14 | 30-130 | 56.2 | 423 | 13:03 | 30-130 | 58.0 |
| 326 | 11:26 | 30-130 | 61.5 | 375 | 12:15 | 30-130 | 57.6 | 424 | 13:04 | 30-130 | 57.2 |
| 327 | 11:27 | 30-130 | 59.6 | 376 | 12:16 | 30-130 | 53.1 | 425 | 13:05 | 30-130 | 56.4 |
| 328 | 11:28 | 30-130 | 60.3 | 377 | 12:17 | 30-130 | 57.8 | 426 | 13:06 | 30-130 | 57.8 |
| 329 | 11:29 | 30-130 | 59.5 | 378 | 12:18 | 30-130 | 56.5 | 427 | 13:07 | 30-130 | 58.9 |
| 330 | 11:30 | 30-130 | 61.3 | 379 | 12:19 | 30-130 | 54.7 | 428 | 13:08 | 30-130 | 59.3 |
| 331 | 11:31 | 30-130 | 60.4 | 380 | 12:20 | 30-130 | 56.5 | 429 | 13:09 | 30-130 | 59.4 |
| 332 | 11:32 | 30-130 | 59.0 | 381 | 12:21 | 30-130 | 56.9 | 430 | 13:10 | 30-130 | 59.3 |
| 333 | 11:33 | 30-130 | 60.9 | 382 | 12:22 | 30-130 | 55.7 | 431 | 13:11 | 30-130 | 57.5 |
| 334 | 11:34 | 30-130 | 61.9 | 383 | 12:23 | 30-130 | 56.1 | 432 | 13:12 | 30-130 | 58.4 |
| 335 | 11:35 | 30-130 | 60.5 | 384 | 12:24 | 30-130 | 56.4 | 433 | 13:13 | 30-130 | 59.1 |
| 336 | 11:36 | 30-130 | 61.6 | 385 | 12:25 | 30-130 | 58.6 | 434 | 13:14 | 30-130 | 56.8 |
| 337 | 11:37 | 30-130 | 59.2 | 386 | 12:26 | 30-130 | 56.2 | 435 | 13:15 | 30-130 | 57.8 |
| 338 | 11:38 | 30-130 | 61.6 | 387 | 12:27 | 30-130 | 57.3 | 436 | 13:16 | 30-130 | 59.0 |
| 339 | 11:39 | 30-130 | 59.1 | 388 | 12:28 | 30-130 | 56.2 | 437 | 13:17 | 30-130 | 60.2 |
| 340 | 11:40 | 30-130 | 59.8 | 389 | 12:29 | 30-130 | 58.3 | 438 | 13:18 | 30-130 | 61.4 |
| 341 | 11:41 | 30-130 | 62.5 | 390 | 12:30 | 30-130 | 57.3 | 439 | 13:19 | 30-130 | 59.3 |
| 342 | 11:42 | 30-130 | 61.7 | 391 | 12:31 | 30-130 | 56.1 | 440 | 13:20 | 30-130 | 60.4 |
| 343 | 11:43 | 30-130 | 62.5 | 392 | 12:32 | 30-130 | 57.8 | 441 | 13:21 | 30-130 | 58.9 |

# BHARAT PETROLEUM CORPORATION LIMITED, BINA-M.P.

## NOISE MONITORING REPORT INSIDE GREEN BELT AREA

**Location-Tower No.7 Date-28/08/2023 July 2023 TO September 2023**

| NOISE MONITORING FOR DAY TIME (06:00 AM to 10:00 PM) | | | | | | | | | | | |
|---|---|---|---|---|---|---|---|---|---|---|---|
| Record No. | Time hh:mm | Range dB | Reading dB A | Record No. | Time hh:mm | Range dB | Reading dB A | Record No. | Time hh:mm | Range dB | Reading dB A |
| 442 | 13:22 | 30-130 | 58.4 | 491 | 14:11 | 30-130 | 58.1 | 540 | 15:00 | 30-130 | 64.4 |
| 443 | 13:23 | 30-130 | 59.4 | 492 | 14:12 | 30-130 | 57.2 | 541 | 15:01 | 30-130 | 63.3 |
| 444 | 13:24 | 30-130 | 58.7 | 493 | 14:13 | 30-130 | 56.2 | 542 | 15:02 | 30-130 | 62.8 |
| 445 | 13:25 | 30-130 | 57.8 | 494 | 14:14 | 30-130 | 58.4 | 543 | 15:03 | 30-130 | 61.6 |
| 446 | 13:26 | 30-130 | 59.4 | 495 | 14:15 | 30-130 | 56.7 | 544 | 15:04 | 30-130 | 64.6 |
| 447 | 13:27 | 30-130 | 56.7 | 496 | 14:16 | 30-130 | 57.6 | 545 | 15:05 | 30-130 | 57.1 |
| 448 | 13:28 | 30-130 | 58.4 | 497 | 14:17 | 30-130 | 56.2 | 546 | 15:06 | 30-130 | 56.9 |
| 449 | 13:29 | 30-130 | 58.6 | 498 | 14:18 | 30-130 | 58.6 | 547 | 15:07 | 30-130 | 57.3 |
| 450 | 13:30 | 30-130 | 56.8 | 499 | 14:19 | 30-130 | 57.2 | 548 | 15:08 | 30-130 | 58.2 |
| 451 | 13:31 | 30-130 | 57.4 | 500 | 14:20 | 30-130 | 58.0 | 549 | 15:09 | 30-130 | 57.3 |
| 452 | 13:32 | 30-130 | 57.8 | 501 | 14:21 | 30-130 | 59.2 | 550 | 15:10 | 30-130 | 58.1 |
| 453 | 13:33 | 30-130 | 56.8 | 502 | 14:22 | 30-130 | 57.3 | 551 | 15:11 | 30-130 | 57.3 |
| 454 | 13:34 | 30-130 | 59.4 | 503 | 14:23 | 30-130 | 58.0 | 552 | 15:12 | 30-130 | 56.2 |
| 455 | 13:35 | 30-130 | 56.4 | 504 | 14:24 | 30-130 | 57.9 | 553 | 15:13 | 30-130 | 57.6 |
| 456 | 13:36 | 30-130 | 57.4 | 505 | 14:25 | 30-130 | 57.5 | 554 | 15:14 | 30-130 | 57.4 |
| 457 | 13:37 | 30-130 | 58.6 | 506 | 14:26 | 30-130 | 56.4 | 555 | 15:15 | 30-130 | 56.6 |
| 458 | 13:38 | 30-130 | 59.4 | 507 | 14:27 | 30-130 | 57.3 | 556 | 15:16 | 30-130 | 57.4 |
| 459 | 13:39 | 30-130 | 56.8 | 508 | 14:28 | 30-130 | 58.8 | 557 | 15:17 | 30-130 | 55.3 |
| 460 | 13:40 | 30-130 | 56.9 | 509 | 14:29 | 30-130 | 57.1 | 558 | 15:18 | 30-130 | 58.9 |
| 461 | 13:41 | 30-130 | 57.3 | 510 | 14:30 | 30-130 | 56.6 | 559 | 15:19 | 30-130 | 57.0 |
| 462 | 13:42 | 30-130 | 57.8 | 511 | 14:31 | 30-130 | 57.9 | 560 | 15:20 | 30-130 | 56.1 |
| 463 | 13:43 | 30-130 | 59.4 | 512 | 14:32 | 30-130 | 58.1 | 561 | 15:21 | 30-130 | 56.2 |
| 464 | 13:44 | 30-130 | 59.5 | 513 | 14:33 | 30-130 | 56.2 | 562 | 15:22 | 30-130 | 57.5 |
| 465 | 13:45 | 30-130 | 56.7 | 514 | 14:34 | 30-130 | 57.2 | 563 | 15:23 | 30-130 | 56.8 |
| 466 | 13:46 | 30-130 | 57.8 | 515 | 14:35 | 30-130 | 56.2 | 564 | 15:24 | 30-130 | 57.3 |
| 467 | 13:47 | 30-130 | 58.6 | 516 | 14:36 | 30-130 | 58.7 | 565 | 15:25 | 30-130 | 56.6 |
| 468 | 13:48 | 30-130 | 56.6 | 517 | 14:37 | 30-130 | 56.0 | 566 | 15:26 | 30-130 | 57.6 |
| 469 | 13:49 | 30-130 | 58.4 | 518 | 14:38 | 30-130 | 57.6 | 567 | 15:27 | 30-130 | 57.0 |
| 470 | 13:50 | 30-130 | 56.6 | 519 | 14:39 | 30-130 | 56.6 | 568 | 15:28 | 30-130 | 58.0 |
| 471 | 13:51 | 30-130 | 57.6 | 520 | 14:40 | 30-130 | 57.0 | 569 | 15:29 | 30-130 | 56.7 |
| 472 | 13:52 | 30-130 | 56.9 | 521 | 14:41 | 30-130 | 56.2 | 570 | 15:30 | 30-130 | 57.3 |
| 473 | 13:53 | 30-130 | 57.6 | 522 | 14:42 | 30-130 | 57.7 | 571 | 15:31 | 30-130 | 58.9 |
| 474 | 13:54 | 30-130 | 56.6 | 523 | 14:43 | 30-130 | 58.5 | 572 | 15:32 | 30-130 | 57.9 |
| 475 | 13:55 | 30-130 | 55.6 | 524 | 14:44 | 30-130 | 57.6 | 573 | 15:33 | 30-130 | 56.5 |
| 476 | 13:56 | 30-130 | 57.6 | 525 | 14:45 | 30-130 | 56.6 | 574 | 15:34 | 30-130 | 57.3 |
| 477 | 13:57 | 30-130 | 56.5 | 526 | 14:46 | 30-130 | 57.7 | 575 | 15:35 | 30-130 | 56.8 |
| 478 | 13:58 | 30-130 | 57.5 | 527 | 14:47 | 30-130 | 58.7 | 576 | 15:36 | 30-130 | 57.5 |
| 479 | 13:59 | 30-130 | 58.6 | 528 | 14:48 | 30-130 | 57.3 | 577 | 15:37 | 30-130 | 56.6 |
| 480 | 14:00 | 30-130 | 57.6 | 529 | 14:49 | 30-130 | 56.4 | 578 | 15:38 | 30-130 | 56.3 |
| 481 | 14:01 | 30-130 | 55.7 | 530 | 14:50 | 30-130 | 57.2 | 579 | 15:39 | 30-130 | 57.5 |
| 482 | 14:02 | 30-130 | 56.1 | 531 | 14:51 | 30-130 | 56.6 | 580 | 15:40 | 30-130 | 56.3 |
| 483 | 14:03 | 30-130 | 57.7 | 532 | 14:52 | 30-130 | 58.1 | 581 | 15:41 | 30-130 | 57.4 |
| 484 | 14:04 | 30-130 | 58.2 | 533 | 14:53 | 30-130 | 57.4 | 582 | 15:42 | 30-130 | 56.0 |
| 485 | 14:05 | 30-130 | 56.3 | 534 | 14:54 | 30-130 | 58.5 | 583 | 15:43 | 30-130 | 57.9 |
| 486 | 14:06 | 30-130 | 58.2 | 535 | 14:55 | 30-130 | 59.1 | 584 | 15:44 | 30-130 | 58.9 |
| 487 | 14:07 | 30-130 | 57.1 | 536 | 14:56 | 30-130 | 58.1 | 585 | 15:45 | 30-130 | 58.5 |
| 488 | 14:08 | 30-130 | 57.2 | 537 | 14:57 | 30-130 | 59.6 | 586 | 15:46 | 30-130 | 57.5 |
| 489 | 14:09 | 30-130 | 56.6 | 538 | 14:58 | 30-130 | 60.1 | 587 | 15:47 | 30-130 | 56.8 |
| 490 | 14:10 | 30-130 | 57.6 | 539 | 14:59 | 30-130 | 61.3 | 588 | 15:48 | 30-130 | 56.3 |

# BHARAT PETROLEUM CORPORATION LIMITED, BINA-M.P.

## NOISE MONITORING REPORT INSIDE GREEN BELT AREA

**Location-Tower No.7 Date-28/08/2023 July 2023 TO September 2023**

| NOISE MONITORING FOR DAY TIME (06:00 AM to 10:00 PM) | | | | | | | | | | | |
|---|---|---|---|---|---|---|---|---|---|---|---|
| Record No. | Time hh:mm | Range dB | Reading dB A | Record No. | Time hh:mm | Range dB | Reading dB A | Record No. | Time hh:mm | Range dB | Reading dB A |
| 589 | 15:49 | 30-130 | 57.6 | 638 | 16:38 | 30-130 | 57.6 | 687 | 17:27 | 30-130 | 59.6 |
| 590 | 15:50 | 30-130 | 56.8 | 639 | 16:39 | 30-130 | 56.5 | 688 | 17:28 | 30-130 | 60.3 |
| 591 | 15:51 | 30-130 | 56.7 | 640 | 16:40 | 30-130 | 57.6 | 689 | 17:29 | 30-130 | 59.5 |
| 592 | 15:52 | 30-130 | 58.6 | 641 | 16:41 | 30-130 | 57.7 | 690 | 17:30 | 30-130 | 58.3 |
| 593 | 15:53 | 30-130 | 57.4 | 642 | 16:42 | 30-130 | 56.6 | 691 | 17:31 | 30-130 | 60.4 |
| 594 | 15:54 | 30-130 | 56.6 | 643 | 16:43 | 30-130 | 58.5 | 692 | 17:32 | 30-130 | 59.0 |
| 595 | 15:55 | 30-130 | 55.4 | 644 | 16:44 | 30-130 | 56.2 | 693 | 17:33 | 30-130 | 60.9 |
| 596 | 15:56 | 30-130 | 57.6 | 645 | 16:45 | 30-130 | 57.5 | 694 | 17:34 | 30-130 | 61.9 |
| 597 | 15:57 | 30-130 | 56.6 | 646 | 16:46 | 30-130 | 57.6 | 695 | 17:35 | 30-130 | 60.5 |
| 598 | 15:58 | 30-130 | 57.3 | 647 | 16:47 | 30-130 | 56.6 | 696 | 17:36 | 30-130 | 61.6 |
| 599 | 15:59 | 30-130 | 56.8 | 648 | 16:48 | 30-130 | 57.9 | 697 | 17:37 | 30-130 | 59.2 |
| 600 | 16:00 | 30-130 | 57.3 | 649 | 16:49 | 30-130 | 58.5 | 698 | 17:38 | 30-130 | 58.6 |
| 601 | 16:01 | 30-130 | 56.2 | 650 | 16:50 | 30-130 | 56.3 | 699 | 17:39 | 30-130 | 59.1 |
| 602 | 16:02 | 30-130 | 57.3 | 651 | 16:51 | 30-130 | 57.2 | 700 | 17:40 | 30-130 | 59.8 |
| 603 | 16:03 | 30-130 | 56.1 | 652 | 16:52 | 30-130 | 57.2 | 701 | 17:41 | 30-130 | 59.5 |
| 604 | 16:04 | 30-130 | 57.3 | 653 | 16:53 | 30-130 | 56.5 | 702 | 17:42 | 30-130 | 61.7 |
| 605 | 16:05 | 30-130 | 56.2 | 654 | 16:54 | 30-130 | 58.2 | 703 | 17:43 | 30-130 | 62.5 |
| 606 | 16:06 | 30-130 | 57.6 | 655 | 16:55 | 30-130 | 59.7 | 704 | 17:44 | 30-130 | 64.9 |
| 607 | 16:07 | 30-130 | 58.4 | 656 | 16:56 | 30-130 | 58.0 | 705 | 17:45 | 30-130 | 62.7 |
| 608 | 16:08 | 30-130 | 57.6 | 657 | 16:57 | 30-130 | 57.1 | 706 | 17:46 | 30-130 | 59.1 |
| 609 | 16:09 | 30-130 | 58.4 | 658 | 16:58 | 30-130 | 57.6 | 707 | 17:47 | 30-130 | 59.4 |
| 610 | 16:10 | 30-130 | 57.9 | 659 | 16:59 | 30-130 | 58.1 | 708 | 17:48 | 30-130 | 58.6 |
| 611 | 16:11 | 30-130 | 56.2 | 660 | 17:00 | 30-130 | 57.4 | 709 | 17:49 | 30-130 | 59.2 |
| 612 | 16:12 | 30-130 | 57.0 | 661 | 17:01 | 30-130 | 61.3 | 710 | 17:50 | 30-130 | 60.3 |
| 613 | 16:13 | 30-130 | 56.8 | 662 | 17:02 | 30-130 | 62.2 | 711 | 17:51 | 30-130 | 61.2 |
| 614 | 16:14 | 30-130 | 57.3 | 663 | 17:03 | 30-130 | 59.6 | 712 | 17:52 | 30-130 | 60.3 |
| 615 | 16:15 | 30-130 | 58.3 | 664 | 17:04 | 30-130 | 59.4 | 713 | 17:53 | 30-130 | 61.3 |
| 616 | 16:16 | 30-130 | 57.4 | 665 | 17:05 | 30-130 | 61.6 | 714 | 17:54 | 30-130 | 62.1 |
| 617 | 16:17 | 30-130 | 56.3 | 666 | 17:06 | 30-130 | 59.4 | 715 | 17:55 | 30-130 | 60.6 |
| 618 | 16:18 | 30-130 | 58.0 | 667 | 17:07 | 30-130 | 59.3 | 716 | 17:56 | 30-130 | 59.4 |
| 619 | 16:19 | 30-130 | 56.6 | 668 | 17:08 | 30-130 | 59.9 | 717 | 17:57 | 30-130 | 58.6 |
| 620 | 16:20 | 30-130 | 57.6 | 669 | 17:09 | 30-130 | 62.0 | 718 | 17:58 | 30-130 | 60.7 |
| 621 | 16:21 | 30-130 | 58.6 | 670 | 17:10 | 30-130 | 61.1 | 719 | 17:59 | 30-130 | 60.9 |
| 622 | 16:22 | 30-130 | 57.2 | 671 | 17:11 | 30-130 | 60.3 | 720 | 18:00 | 30-130 | 61.8 |
| 623 | 16:23 | 30-130 | 56.6 | 672 | 17:12 | 30-130 | 60.7 | 721 | 18:01 | 30-130 | 56.2 |
| 624 | 16:24 | 30-130 | 59.1 | 673 | 17:13 | 30-130 | 59.8 | 722 | 18:02 | 30-130 | 57.3 |
| 625 | 16:25 | 30-130 | 58.4 | 674 | 17:14 | 30-130 | 59.3 | 723 | 18:03 | 30-130 | 58.1 |
| 626 | 16:26 | 30-130 | 56.6 | 675 | 17:15 | 30-130 | 60.6 | 724 | 18:04 | 30-130 | 57.3 |
| 627 | 16:27 | 30-130 | 57.6 | 676 | 17:16 | 30-130 | 61.6 | 725 | 18:05 | 30-130 | 56.2 |
| 628 | 16:28 | 30-130 | 56.2 | 677 | 17:17 | 30-130 | 60.0 | 726 | 18:06 | 30-130 | 57.6 |
| 629 | 16:29 | 30-130 | 57.0 | 678 | 17:18 | 30-130 | 62.0 | 727 | 18:07 | 30-130 | 57.4 |
| 630 | 16:30 | 30-130 | 57.8 | 679 | 17:19 | 30-130 | 60.7 | 728 | 18:08 | 30-130 | 58.6 |
| 631 | 16:31 | 30-130 | 56.2 | 680 | 17:20 | 30-130 | 61.3 | 729 | 18:09 | 30-130 | 57.4 |
| 632 | 16:32 | 30-130 | 57.8 | 681 | 17:21 | 30-130 | 60.9 | 730 | 18:10 | 30-130 | 56.6 |
| 633 | 16:33 | 30-130 | 56.6 | 682 | 17:22 | 30-130 | 59.9 | 731 | 18:11 | 30-130 | 57.6 |
| 634 | 16:34 | 30-130 | 57.9 | 683 | 17:23 | 30-130 | 59.5 | 732 | 18:12 | 30-130 | 56.6 |
| 635 | 16:35 | 30-130 | 58.8 | 684 | 17:24 | 30-130 | 59.3 | 733 | 18:13 | 30-130 | 57.6 |
| 636 | 16:36 | 30-130 | 57.6 | 685 | 17:25 | 30-130 | 62.8 | 734 | 18:14 | 30-130 | 56.4 |
| 637 | 16:37 | 30-130 | 56.0 | 686 | 17:26 | 30-130 | 61.5 | 735 | 18:15 | 30-130 | 57.6 |

# BHARAT PETROLEUM CORPORATION LIMITED, BINA-M.P.

## NOISE MONITORING REPORT INSIDE GREEN BELT AREA

**Location-Tower No.7 Date-28/08/2023 July 2023 TO September 2023**

| NOISE MONITORING FOR DAY TIME (06:00 AM to 10:00 PM) | | | | | | | | | | | |
|---|---|---|---|---|---|---|---|---|---|---|---|
| Record No. | Time hh:mm | Range dB | Reading dB A | Record No. | Time hh:mm | Range dB | Reading dB A | Record No. | Time hh:mm | Range dB | Reading dB A |
| 736 | 18:16 | 30-130 | 58.8 | 785 | 19:05 | 30-130 | 57.6 | 834 | 19:54 | 30-130 | 58.6 |
| 737 | 18:17 | 30-130 | 57.0 | 786 | 19:06 | 30-130 | 56.6 | 835 | 19:55 | 30-130 | 57.5 |
| 738 | 18:18 | 30-130 | 56.6 | 787 | 19:07 | 30-130 | 58.9 | 836 | 19:56 | 30-130 | 58.6 |
| 739 | 18:19 | 30-130 | 57.0 | 788 | 19:08 | 30-130 | 57.3 | 837 | 19:57 | 30-130 | 57.6 |
| 740 | 18:20 | 30-130 | 56.9 | 789 | 19:09 | 30-130 | 57.2 | 838 | 19:58 | 30-130 | 56.0 |
| 741 | 18:21 | 30-130 | 56.7 | 790 | 19:10 | 30-130 | 56.3 | 839 | 19:59 | 30-130 | 56.2 |
| 742 | 18:22 | 30-130 | 57.1 | 791 | 19:11 | 30-130 | 55.1 | 840 | 20:00 | 30-130 | 55.5 |
| 743 | 18:23 | 30-130 | 58.9 | 792 | 19:12 | 30-130 | 56.3 | 841 | 20:01 | 30-130 | 62.0 |
| 744 | 18:24 | 30-130 | 57.2 | 793 | 19:13 | 30-130 | 56.2 | 842 | 20:02 | 30-130 | 60.4 |
| 745 | 18:25 | 30-130 | 57.1 | 794 | 19:14 | 30-130 | 56.6 | 843 | 20:03 | 30-130 | 62.8 |
| 746 | 18:26 | 30-130 | 56.2 | 795 | 19:15 | 30-130 | 58.4 | 844 | 20:04 | 30-130 | 60.9 |
| 747 | 18:27 | 30-130 | 57.6 | 796 | 19:16 | 30-130 | 56.6 | 845 | 20:05 | 30-130 | 62.7 |
| 748 | 18:28 | 30-130 | 57.5 | 797 | 19:17 | 30-130 | 56.4 | 846 | 20:06 | 30-130 | 63.8 |
| 749 | 18:29 | 30-130 | 58.6 | 798 | 19:18 | 30-130 | 57.7 | 847 | 20:07 | 30-130 | 64.9 |
| 750 | 18:30 | 30-130 | 56.6 | 799 | 19:19 | 30-130 | 56.6 | 848 | 20:08 | 30-130 | 59.0 |
| 751 | 18:31 | 30-130 | 58.0 | 800 | 19:20 | 30-130 | 56.6 | 849 | 20:09 | 30-130 | 60.3 |
| 752 | 18:32 | 30-130 | 57.2 | 801 | 19:21 | 30-130 | 58.4 | 850 | 20:10 | 30-130 | 60.9 |
| 753 | 18:33 | 30-130 | 56.5 | 802 | 19:22 | 30-130 | 56.6 | 851 | 20:11 | 30-130 | 61.4 |
| 754 | 18:34 | 30-130 | 57.9 | 803 | 19:23 | 30-130 | 57.6 | 852 | 20:12 | 30-130 | 62.8 |
| 755 | 18:35 | 30-130 | 56.2 | 804 | 19:24 | 30-130 | 56.9 | 853 | 20:13 | 30-130 | 60.9 |
| 756 | 15:36 | 30-130 | 57.5 | 805 | 19:25 | 30-130 | 57.6 | 854 | 20:14 | 30-130 | 60.7 |
| 757 | 18:37 | 30-130 | 58.2 | 806 | 19:26 | 30-130 | 56.6 | 855 | 20:15 | 30-130 | 60.8 |
| 758 | 18:38 | 30-130 | 57.6 | 807 | 19:27 | 30-130 | 55.6 | 856 | 20:16 | 30-130 | 61.9 |
| 759 | 18:39 | 30-130 | 58.6 | 808 | 19:28 | 30-130 | 57.6 | 857 | 20:17 | 30-130 | 61.8 |
| 760 | 18:40 | 30-130 | 57.6 | 809 | 19:29 | 30-130 | 56.5 | 858 | 20:18 | 30-130 | 62.6 |
| 761 | 18:41 | 30-130 | 58.4 | 810 | 19:30 | 30-130 | 57.5 | 859 | 20:19 | 30-130 | 61.8 |
| 762 | 18:42 | 30-130 | 56.6 | 811 | 19:31 | 30-130 | 58.6 | 860 | 20:20 | 30-130 | 61.6 |
| 763 | 18:43 | 30-130 | 56.6 | 812 | 19:32 | 30-130 | 57.6 | 861 | 20:21 | 30-130 | 60.8 |
| 764 | 18:44 | 30-130 | 57.4 | 813 | 19:33 | 30-130 | 57.4 | 862 | 20:22 | 30-130 | 61.7 |
| 765 | 18:45 | 30-130 | 58.6 | 814 | 19:34 | 30-130 | 56.6 | 863 | 20:23 | 30-130 | 60.9 |
| 766 | 18:46 | 30-130 | 55.5 | 815 | 19:35 | 30-130 | 55.6 | 864 | 20:24 | 30-130 | 59.4 |
| 767 | 18:47 | 30-130 | 56.6 | 816 | 19:36 | 30-130 | 58.4 | 865 | 20:25 | 30-130 | 59.1 |
| 768 | 18:48 | 30-130 | 57.3 | 817 | 19:37 | 30-130 | 56.6 | 866 | 20:26 | 30-130 | 59.2 |
| 769 | 18:49 | 30-130 | 57.5 | 818 | 19:38 | 30-130 | 58.5 | 867 | 20:27 | 30-130 | 59.9 |
| 770 | 18:50 | 30-130 | 56.8 | 819 | 19:39 | 30-130 | 56.6 | 868 | 20:28 | 30-130 | 59.4 |
| 771 | 18:51 | 30-130 | 55.0 | 820 | 19:40 | 30-130 | 57.3 | 869 | 20:29 | 30-130 | 59.8 |
| 772 | 18:52 | 30-130 | 55.6 | 821 | 19:41 | 30-130 | 57.5 | 870 | 20:30 | 30-130 | 61.1 |
| 773 | 18:53 | 30-130 | 56.0 | 822 | 19:42 | 30-130 | 58.8 | 871 | 20:31 | 30-130 | 59.9 |
| 774 | 18:54 | 30-130 | 57.6 | 823 | 19:43 | 30-130 | 57.5 | 872 | 20:32 | 30-130 | 59.3 |
| 775 | 18:55 | 30-130 | 56.4 | 824 | 19:44 | 30-130 | 56.6 | 873 | 20:33 | 30-130 | 61.1 |
| 776 | 18:56 | 30-130 | 58.6 | 825 | 19:45 | 30-130 | 57.7 | 874 | 20:34 | 30-130 | 62.8 |
| 777 | 18:57 | 30-130 | 57.5 | 826 | 19:46 | 30-130 | 56.5 | 875 | 20:35 | 30-130 | 59.3 |
| 778 | 18:58 | 30-130 | 56.6 | 827 | 19:47 | 30-130 | 56.6 | 876 | 20:36 | 30-130 | 59.5 |
| 779 | 18:59 | 30-130 | 57.4 | 828 | 19:48 | 30-130 | 57.4 | 877 | 20:37 | 30-130 | 59.9 |
| 780 | 19:00 | 30-130 | 58.0 | 829 | 19:49 | 30-130 | 58.6 | 878 | 20:38 | 30-130 | 60.7 |
| 781 | 19:01 | 30-130 | 57.2 | 830 | 19:50 | 30-130 | 58.4 | 879 | 20:39 | 30-130 | 59.3 |
| 782 | 19:02 | 30-130 | 56.3 | 831 | 19:51 | 30-130 | 57.2 | 880 | 20:40 | 30-130 | 58.4 |
| 783 | 19:03 | 30-130 | 55.2 | 832 | 19:52 | 30-130 | 55.4 | 881 | 20:41 | 30-130 | 60.7 |
| 784 | 19:04 | 30-130 | 56.6 | 833 | 19:53 | 30-130 | 56.6 | 882 | 20:42 | 30-130 | 60.9 |

# BHARAT PETROLEUM CORPORATION LIMITED, BINA-M.P.

## NOISE MONITORING REPORT INSIDE GREEN BELT AREA

**Location-Tower No.7 Date-28/08/2023 July 2023 TO September 2023**

| NOISE MONITORING FOR DAY TIME (06:00 AM to 10:00 PM) | | | | | | | |
|---|---|---|---|---|---|---|---|
| Record No. | Time hh:mm | Range dB | Reading dB A | Record No. | Time hh:mm | Range dB | Reading dB A |
| 883 | 20:43 | 30-130 | 61.4 | 922 | 21:22 | 30-130 | 56.6 |
| 884 | 20:44 | 30-130 | 59.3 | 923 | 21:23 | 30-130 | 58.4 |
| 885 | 20:45 | 30-130 | 59.4 | 924 | 21:24 | 30-130 | 57.6 |
| 886 | 20:46 | 30-130 | 60.3 | 925 | 21:25 | 30-130 | 54.3 |
| 887 | 20:47 | 30-130 | 61.2 | 926 | 21:26 | 30-130 | 56.6 |
| 888 | 20:48 | 30-130 | 62.3 | 927 | 21:27 | 30-130 | 58.1 |
| 889 | 20:49 | 30-130 | 61.9 | 928 | 21:28 | 30-130 | 54.9 |
| 890 | 20:50 | 30-130 | 62.8 | 929 | 21:29 | 30-130 | 56.5 |
| 891 | 20:51 | 30-130 | 61.6 | 930 | 21:30 | 30-130 | 57.8 |
| 892 | 20:52 | 30-130 | 60.4 | 931 | 21:31 | 30-130 | 55.4 |
| 893 | 20:53 | 30-130 | 61.9 | 932 | 21:32 | 30-130 | 57.2 |
| 894 | 20:54 | 30-130 | 60.0 | 933 | 21:33 | 30-130 | 56.3 |
| 895 | 20:55 | 30-130 | 61.6 | 934 | 21:34 | 30-130 | 57.6 |
| 896 | 20:56 | 30-130 | 60.0 | 935 | 21:35 | 30-130 | 56.4 |
| 897 | 20:57 | 30-130 | 62.6 | 936 | 21:36 | 30-130 | 58.6 |
| 898 | 20:58 | 30-130 | 62.4 | 937 | 21:37 | 30-130 | 57.7 |
| 899 | 20:59 | 30-130 | 58.6 | 938 | 21:38 | 30-130 | 58.6 |
| 900 | 21:00 | 30-130 | 57.5 | 939 | 21:39 | 30-130 | 56.4 |
| 901 | 21:01 | 30-130 | 53.4 | 940 | 21:40 | 30-130 | 57.8 |
| 902 | 21:02 | 30-130 | 53.6 | 941 | 21:41 | 30-130 | 57.3 |
| 903 | 21:03 | 30-130 | 56.6 | 942 | 21:42 | 30-130 | 55.5 |
| 904 | 21:04 | 30-130 | 57.1 | 943 | 21:43 | 30-130 | 56.2 |
| 905 | 21:05 | 30-130 | 56.4 | 944 | 21:44 | 30-130 | 59.3 |
| 906 | 21:06 | 30-130 | 54.6 | 945 | 21:45 | 30-130 | 58.0 |
| 907 | 21:07 | 30-130 | 54.3 | 946 | 21:46 | 30-130 | 56.3 |
| 908 | 21:08 | 30-130 | 56.2 | 947 | 21:47 | 30-130 | 58.5 |
| 909 | 21:09 | 30-130 | 56.2 | 948 | 21:48 | 30-130 | 57.5 |
| 910 | 21:10 | 30-130 | 56.4 | 949 | 21:49 | 30-130 | 54.6 |
| 911 | 21:11 | 30-130 | 56.9 | 950 | 21:50 | 30-130 | 57.0 |
| 912 | 21:12 | 30-130 | 58.8 | 951 | 21:51 | 30-130 | 56.6 |
| 913 | 21:13 | 30-130 | 57.1 | 952 | 21:52 | 30-130 | 56.8 |
| 914 | 21:14 | 30-130 | 56.8 | 953 | 21:53 | 30-130 | 58.5 |
| 915 | 21:15 | 30-130 | 58.6 | 954 | 21:54 | 30-130 | 56.0 |
| 916 | 21:16 | 30-130 | 56.8 | 955 | 21:55 | 30-130 | 58.9 |
| 917 | 21:17 | 30-130 | 58.5 | 956 | 21:56 | 30-130 | 57.7 |
| 918 | 21:18 | 30-130 | 58.8 | 957 | 21:57 | 30-130 | 59.9 |
| 919 | 21:19 | 30-130 | 56.3 | 958 | 21:58 | 30-130 | 58.3 |
| 920 | 21:20 | 30-130 | 55.9 | 959 | 21:59 | 30-130 | 56.4 |
| 921 | 21:21 | 30-130 | 57.3 | 960 | 22:00 | 30-130 | 58.4 |

# BHARAT PETROLEUM CORPORATION LIMITED, BINA-M.P.

## NOISE MONITORING REPORT INSIDE GREEN BELT AREA

**Location-Tower No.7 Date-28/08/2023 July 2023 TO September 2023**

| NOISE MONITORING FOR NIGHT TIME (10:00 PM to 06:00 AM) | | | | | | | | | | | |
|---|---|---|---|---|---|---|---|---|---|---|---|
| Record No. | Time hh:mm | Range dB | Reading dB A | Record No. | Time hh:mm | Range dB | Reading dB A | Record No. | Time hh:mm | Range dB | Reading dB A |
| 961 | 22:01 | 30-130 | 57.3 | 1010 | 22:50 | 30-130 | 56.6 | 1059 | 23:39 | 30-130 | 57.1 |
| 962 | 22:02 | 30-130 | 58.3 | 1011 | 22:51 | 30-130 | 55.4 | 1060 | 23:40 | 30-130 | 57.6 |
| 963 | 22:03 | 30-130 | 57.4 | 1012 | 22:52 | 30-130 | 56.6 | 1061 | 23:41 | 30-130 | 57.2 |
| 964 | 22:04 | 30-130 | 56.3 | 1013 | 22:53 | 30-130 | 57.5 | 1062 | 23:42 | 30-130 | 57.5 |
| 965 | 22:05 | 30-130 | 58.0 | 1014 | 22:54 | 30-130 | 58.6 | 1063 | 23:43 | 30-130 | 57.1 |
| 966 | 22:06 | 30-130 | 56.6 | 1015 | 22:55 | 30-130 | 57.3 | 1064 | 23:44 | 30-130 | 57.5 |
| 967 | 22:07 | 30-130 | 57.6 | 1016 | 22:56 | 30-130 | 58.5 | 1065 | 23:45 | 30-130 | 57.4 |
| 968 | 22:08 | 30-130 | 58.6 | 1017 | 22:57 | 30-130 | 57.8 | 1066 | 23:46 | 30-130 | 57.6 |
| 969 | 22:09 | 30-130 | 57.2 | 1018 | 22:58 | 30-130 | 57.0 | 1067 | 23:47 | 30-130 | 57.5 |
| 970 | 22:10 | 30-130 | 56.6 | 1019 | 22:59 | 30-130 | 56.6 | 1068 | 23:48 | 30-130 | 57.6 |
| 971 | 22:11 | 30-130 | 59.1 | 1020 | 23:00 | 30-130 | 57.0 | 1069 | 23:49 | 30-130 | 57.5 |
| 972 | 22:12 | 30-130 | 58.4 | 1021 | 23:01 | 30-130 | 57.6 | 1070 | 23:50 | 30-130 | 57.6 |
| 973 | 22:13 | 30-130 | 56.6 | 1022 | 23:02 | 30-130 | 57.2 | 1071 | 23:51 | 30-130 | 57.3 |
| 974 | 22:14 | 30-130 | 57.6 | 1023 | 23:03 | 30-130 | 57.3 | 1072 | 23:52 | 30-130 | 57.2 |
| 975 | 22:15 | 30-130 | 56.2 | 1024 | 23:04 | 30-130 | 57.5 | 1073 | 23:53 | 30-130 | 57.2 |
| 976 | 22:16 | 30-130 | 57.0 | 1025 | 23:05 | 30-130 | 57.4 | 1074 | 23:54 | 30-130 | 57.1 |
| 977 | 22:17 | 30-130 | 57.8 | 1026 | 23:06 | 30-130 | 57.1 | 1075 | 23:55 | 30-130 | 57.3 |
| 978 | 22:18 | 30-130 | 56.2 | 1027 | 23:07 | 30-130 | 57.4 | 1076 | 23:56 | 30-130 | 57.2 |
| 979 | 22:19 | 30-130 | 57.8 | 1028 | 23:08 | 30-130 | 57.5 | 1077 | 23:57 | 30-130 | 57.4 |
| 980 | 22:20 | 30-130 | 56.6 | 1029 | 23:09 | 30-130 | 57.2 | 1078 | 23:58 | 30-130 | 57.6 |
| 981 | 22:21 | 30-130 | 57.9 | 1030 | 23:10 | 30-130 | 57.4 | 1079 | 23:59 | 30-130 | 57.5 |
| 982 | 22:22 | 30-130 | 58.8 | 1031 | 23:11 | 30-130 | 57.2 | 1080 | 0:00 | 30-130 | 57.2 |
| 983 | 22:23 | 30-130 | 57.6 | 1032 | 23:12 | 30-130 | 57.4 | 1081 | 0:01 | 30-130 | 57.4 |
| 984 | 22:24 | 30-130 | 56.0 | 1033 | 23:13 | 30-130 | 57.3 | 1082 | 0:02 | 30-130 | 57.3 |
| 985 | 22:25 | 30-130 | 57.6 | 1034 | 23:14 | 30-130 | 57.3 | 1083 | 0:03 | 30-130 | 57.3 |
| 986 | 22:26 | 30-130 | 56.5 | 1035 | 23:15 | 30-130 | 57.1 | 1084 | 0:04 | 30-130 | 57.2 |
| 987 | 22:27 | 30-130 | 57.6 | 1036 | 23:16 | 30-130 | 57.2 | 1085 | 0:05 | 30-130 | 57.4 |
| 988 | 22:28 | 30-130 | 57.7 | 1037 | 23:17 | 30-130 | 57.6 | 1086 | 0:06 | 30-130 | 57.3 |
| 989 | 22:29 | 30-130 | 56.6 | 1038 | 23:18 | 30-130 | 57.2 | 1087 | 0:07 | 30-130 | 57.2 |
| 990 | 22:30 | 30-130 | 58.5 | 1039 | 23:19 | 30-130 | 57.6 | 1088 | 0:08 | 30-130 | 57.4 |
| 991 | 22:31 | 30-130 | 56.2 | 1040 | 23:20 | 30-130 | 57.2 | 1089 | 0:09 | 30-130 | 57.4 |
| 992 | 22:32 | 30-130 | 57.5 | 1041 | 23:21 | 30-130 | 57.5 | 1090 | 0:10 | 30-130 | 57.1 |
| 993 | 22:33 | 30-130 | 57.6 | 1042 | 23:22 | 30-130 | 57.5 | 1091 | 0:11 | 30-130 | 57.3 |
| 994 | 22:34 | 30-130 | 56.6 | 1043 | 23:23 | 30-130 | 57.2 | 1092 | 0:12 | 30-130 | 57.2 |
| 995 | 22:35 | 30-130 | 57.9 | 1044 | 23:24 | 30-130 | 57.4 | 1093 | 0:13 | 30-130 | 57.4 |
| 996 | 22:36 | 30-130 | 58.5 | 1045 | 23:25 | 30-130 | 57.4 | 1094 | 0:14 | 30-130 | 57.3 |
| 997 | 22:37 | 30-130 | 56.3 | 1046 | 23:26 | 30-130 | 57.5 | 1095 | 0:15 | 30-130 | 57.4 |
| 998 | 22:38 | 30-130 | 57.2 | 1047 | 23:27 | 30-130 | 57.1 | 1096 | 0:16 | 30-130 | 57.4 |
| 999 | 22:39 | 30-130 | 57.2 | 1048 | 23:28 | 30-130 | 57.4 | 1097 | 0:17 | 30-130 | 57.3 |
| 1000 | 22:40 | 30-130 | 56.5 | 1049 | 23:29 | 30-130 | 57.6 | 1098 | 0:18 | 30-130 | 57.3 |
| 1001 | 22:41 | 30-130 | 58.2 | 1050 | 23:30 | 30-130 | 57.2 | 1099 | 0:19 | 30-130 | 57.3 |
| 1002 | 22:42 | 30-130 | 59.7 | 1051 | 23:31 | 30-130 | 57.4 | 1100 | 0:20 | 30-130 | 57.1 |
| 1003 | 22:43 | 30-130 | 58.0 | 1052 | 23:32 | 30-130 | 57.4 | 1101 | 0:21 | 30-130 | 57.4 |
| 1004 | 22:44 | 30-130 | 57.1 | 1053 | 23:33 | 30-130 | 57.1 | 1102 | 0:22 | 30-130 | 57.4 |
| 1005 | 22:45 | 30-130 | 57.6 | 1054 | 23:34 | 30-130 | 57.6 | 1103 | 0:23 | 30-130 | 57.3 |
| 1006 | 22:46 | 30-130 | 58.1 | 1055 | 23:35 | 30-130 | 57.1 | 1104 | 0:24 | 30-130 | 57.2 |
| 1007 | 22:47 | 30-130 | 57.4 | 1056 | 23:36 | 30-130 | 57.6 | 1105 | 0:25 | 30-130 | 57.4 |
| 1008 | 22:48 | 30-130 | 56.6 | 1057 | 23:37 | 30-130 | 57.3 | 1106 | 0:26 | 30-130 | 57.3 |
| 1009 | 22:49 | 30-130 | 57.1 | 1058 | 23:38 | 30-130 | 57.6 | 1107 | 0:27 | 30-130 | 57.3 |

# BHARAT PETROLEUM CORPORATION LIMITED, BINA-M.P.

## NOISE MONITORING REPORT INSIDE GREEN BELT AREA

## Location-Tower No.7 Date-28/08/2023 July 2023 TO September 2023

| NOISE MONITORING FOR NIGHT TIME (10:00 PM to 06:00 AM) | | | | | | | | | | | |
|---|---|---|---|---|---|---|---|---|---|---|---|
| Record No. | Time hh:mm | Range dB | Reading dB A | Record No. | Time hh:mm | Range dB | Reading dB A | Record No. | Time hh:mm | Range dB | Reading dB A |
| 1108 | 0:28 | 30-130 | 57.3 | 1157 | 1:17 | 30-130 | 57.5 | 1206 | 2:06 | 30-130 | 57.9 |
| 1109 | 0:29 | 30-130 | 57.3 | 1158 | 1:18 | 30-130 | 58.6 | 1207 | 2:07 | 30-130 | 56.5 |
| 1110 | 0:30 | 30-130 | 57.4 | 1159 | 1:19 | 30-130 | 57.6 | 1208 | 2:08 | 30-130 | 57.9 |
| 1111 | 0:31 | 30-130 | 57.3 | 1160 | 1:20 | 30-130 | 57.4 | 1209 | 2:09 | 30-130 | 55.8 |
| 1112 | 0:32 | 30-130 | 57.1 | 1161 | 1:21 | 30-130 | 56.6 | 1210 | 2:10 | 30-130 | 56.9 |
| 1113 | 0:33 | 30-130 | 57.3 | 1162 | 1:22 | 30-130 | 55.6 | 1211 | 2:11 | 30-130 | 57.5 |
| 1114 | 0:34 | 30-130 | 57.1 | 1163 | 1:23 | 30-130 | 58.4 | 1212 | 2:12 | 30-130 | 58.1 |
| 1115 | 0:35 | 30-130 | 57.3 | 1164 | 1:24 | 30-130 | 56.6 | 1213 | 2:13 | 30-130 | 57.6 |
| 1116 | 0:36 | 30-130 | 57.4 | 1165 | 1:25 | 30-130 | 58.5 | 1214 | 2:14 | 30-130 | 57.6 |
| 1117 | 0:37 | 30-130 | 57.3 | 1166 | 1:26 | 30-130 | 56.6 | 1215 | 2:15 | 30-130 | 56.6 |
| 1118 | 0:38 | 30-130 | 57.3 | 1167 | 1:27 | 30-130 | 57.3 | 1216 | 2:16 | 30-130 | 57.3 |
| 1119 | 0:39 | 30-130 | 57.3 | 1168 | 1:28 | 30-130 | 57.5 | 1217 | 2:17 | 30-130 | 56.8 |
| 1120 | 0:40 | 30-130 | 57.4 | 1169 | 1:29 | 30-130 | 58.8 | 1218 | 2:18 | 30-130 | 57.4 |
| 1121 | 0:41 | 30-130 | 57.2 | 1170 | 1:30 | 30-130 | 57.5 | 1219 | 2:19 | 30-130 | 56.0 |
| 1122 | 0:42 | 30-130 | 57.2 | 1171 | 1:31 | 30-130 | 56.6 | 1220 | 2:20 | 30-130 | 57.9 |
| 1123 | 0:43 | 30-130 | 57.3 | 1172 | 1:32 | 30-130 | 57.7 | 1221 | 2:21 | 30-130 | 58.9 |
| 1124 | 0:44 | 30-130 | 57.3 | 1173 | 1:33 | 30-130 | 56.5 | 1222 | 2:22 | 30-130 | 58.5 |
| 1125 | 0:45 | 30-130 | 57.3 | 1174 | 1:34 | 30-130 | 56.6 | 1223 | 2:23 | 30-130 | 57.5 |
| 1126 | 0:46 | 30-130 | 57.3 | 1175 | 1:35 | 30-130 | 57.4 | 1224 | 2:24 | 30-130 | 56.2 |
| 1127 | 0:47 | 30-130 | 57.2 | 1176 | 1:36 | 30-130 | 58.6 | 1225 | 2:25 | 30-130 | 57.6 |
| 1128 | 0:48 | 30-130 | 57.3 | 1177 | 1:37 | 30-130 | 58.4 | 1226 | 2:26 | 30-130 | 53.1 |
| 1129 | 0:49 | 30-130 | 57.2 | 1178 | 1:38 | 30-130 | 57.2 | 1227 | 2:27 | 30-130 | 57.8 |
| 1130 | 0:50 | 30-130 | 57.2 | 1179 | 1:39 | 30-130 | 55.4 | 1228 | 2:28 | 30-130 | 56.5 |
| 1131 | 0:51 | 30-130 | 57.3 | 1180 | 1:40 | 30-130 | 56.6 | 1229 | 2:29 | 30-130 | 54.7 |
| 1132 | 0:52 | 30-130 | 57.2 | 1181 | 1:41 | 30-130 | 58.6 | 1230 | 2:30 | 30-130 | 56.5 |
| 1133 | 0:53 | 30-130 | 57.1 | 1182 | 1:42 | 30-130 | 57.5 | 1231 | 2:31 | 30-130 | 56.9 |
| 1134 | 0:54 | 30-130 | 57.4 | 1183 | 1:43 | 30-130 | 58.6 | 1232 | 2:32 | 30-130 | 55.7 |
| 1135 | 0:55 | 30-130 | 57.4 | 1184 | 1:44 | 30-130 | 57.6 | 1233 | 2:33 | 30-130 | 56.1 |
| 1136 | 0:56 | 30-130 | 57.3 | 1185 | 1:45 | 30-130 | 56.0 | 1234 | 2:34 | 30-130 | 56.8 |
| 1137 | 0:57 | 30-130 | 57.3 | 1186 | 1:46 | 30-130 | 56.2 | 1235 | 2:35 | 30-130 | 56.7 |
| 1138 | 0:58 | 30-130 | 57.4 | 1187 | 1:47 | 30-130 | 55.5 | 1236 | 2:36 | 30-130 | 58.6 |
| 1139 | 0:59 | 30-130 | 57.3 | 1188 | 1:48 | 30-130 | 56.9 | 1237 | 2:37 | 30-130 | 57.4 |
| 1140 | 1:00 | 30-130 | 57.3 | 1189 | 1:49 | 30-130 | 55.2 | 1238 | 2:38 | 30-130 | 56.6 |
| 1141 | 1:01 | 30-130 | 56.6 | 1190 | 1:50 | 30-130 | 56.5 | 1239 | 2:39 | 30-130 | 55.4 |
| 1142 | 1:02 | 30-130 | 58.4 | 1191 | 1:51 | 30-130 | 57.5 | 1240 | 2:40 | 30-130 | 57.6 |
| 1143 | 1:03 | 30-130 | 56.6 | 1192 | 1:52 | 30-130 | 56.9 | 1241 | 2:41 | 30-130 | 56.6 |
| 1144 | 1:04 | 30-130 | 56.4 | 1193 | 1:53 | 30-130 | 57.5 | 1242 | 2:42 | 30-130 | 57.3 |
| 1145 | 1:05 | 30-130 | 57.7 | 1194 | 1:54 | 30-130 | 58.9 | 1243 | 2:43 | 30-130 | 56.8 |
| 1146 | 1:06 | 30-130 | 56.6 | 1195 | 1:55 | 30-130 | 58.8 | 1244 | 2:44 | 30-130 | 56.8 |
| 1147 | 1:07 | 30-130 | 56.6 | 1196 | 1:56 | 30-130 | 56.9 | 1245 | 2:45 | 30-130 | 56.7 |
| 1148 | 1:08 | 30-130 | 58.4 | 1197 | 1:57 | 30-130 | 57.5 | 1246 | 2:46 | 30-130 | 58.6 |
| 1149 | 1:09 | 30-130 | 56.6 | 1198 | 1:58 | 30-130 | 55.1 | 1247 | 2:47 | 30-130 | 57.4 |
| 1150 | 1:10 | 30-130 | 57.6 | 1199 | 1:59 | 30-130 | 56.6 | 1248 | 2:48 | 30-130 | 56.6 |
| 1151 | 1:11 | 30-130 | 56.9 | 1200 | 2:00 | 30-130 | 57.2 | 1249 | 2:49 | 30-130 | 55.4 |
| 1152 | 1:12 | 30-130 | 57.6 | 1201 | 2:01 | 30-130 | 56.5 | 1250 | 2:50 | 30-130 | 57.6 |
| 1153 | 1:13 | 30-130 | 56.6 | 1202 | 2:02 | 30-130 | 55.9 | 1251 | 2:51 | 30-130 | 56.6 |
| 1154 | 1:14 | 30-130 | 55.6 | 1203 | 2:03 | 30-130 | 56.2 | 1252 | 2:52 | 30-130 | 57.3 |
| 1155 | 1:15 | 30-130 | 57.6 | 1204 | 2:04 | 30-130 | 57.5 | 1253 | 2:53 | 30-130 | 56.8 |
| 1156 | 1:16 | 30-130 | 56.5 | 1205 | 2:05 | 30-130 | 56.5 | 1254 | 2:54 | 30-130 | 58.5 |

# BHARAT PETROLEUM CORPORATION LIMITED, BINA-M.P.

## NOISE MONITORING REPORT INSIDE GREEN BELT AREA

## Location-Tower No.7 Date-28/08/2023 July 2023 TO September 2023

| NOISE MONITORING FOR NIGHT TIME (10:00 PM to 06:00 AM) | | | | | | | | | | | |
|---|---|---|---|---|---|---|---|---|---|---|---|
| Record No. | Time hh:mm | Range dB | Reading dB A | Record No. | Time hh:mm | Range dB | Reading dB A | Record No. | Time hh:mm | Range dB | Reading dB A |
| 1255 | 2:55 | 30-130 | 57.5 | 1304 | 3:44 | 30-130 | 56.2 | 1353 | 4:33 | 30-130 | 57.3 |
| 1256 | 2:56 | 30-130 | 56.2 | 1305 | 3:45 | 30-130 | 57.7 | 1354 | 4:34 | 30-130 | 58.9 |
| 1257 | 2:57 | 30-130 | 57.6 | 1306 | 3:46 | 30-130 | 58.5 | 1355 | 4:35 | 30-130 | 57.9 |
| 1258 | 2:58 | 30-130 | 53.1 | 1307 | 3:47 | 30-130 | 57.6 | 1356 | 4:36 | 30-130 | 56.5 |
| 1259 | 2:59 | 30-130 | 57.8 | 1308 | 3:48 | 30-130 | 56.6 | 1357 | 4:37 | 30-130 | 57.3 |
| 1260 | 3:00 | 30-130 | 56.5 | 1309 | 3:49 | 30-130 | 57.7 | 1358 | 4:38 | 30-130 | 56.8 |
| 1261 | 3:01 | 30-130 | 54.7 | 1310 | 3:50 | 30-130 | 58.7 | 1359 | 4:39 | 30-130 | 57.5 |
| 1262 | 3:02 | 30-130 | 56.5 | 1311 | 3:51 | 30-130 | 57.3 | 1360 | 4:40 | 30-130 | 56.6 |
| 1263 | 3:03 | 30-130 | 56.9 | 1312 | 3:52 | 30-130 | 56.4 | 1361 | 4:41 | 30-130 | 56.3 |
| 1264 | 3:04 | 30-130 | 55.7 | 1313 | 3:53 | 30-130 | 57.2 | 1362 | 4:42 | 30-130 | 57.5 |
| 1265 | 3:05 | 30-130 | 56.1 | 1314 | 3:54 | 30-130 | 56.6 | 1363 | 4:43 | 30-130 | 56.3 |
| 1266 | 3:06 | 30-130 | 57.7 | 1315 | 3:55 | 30-130 | 58.1 | 1364 | 4:44 | 30-130 | 57.4 |
| 1267 | 3:07 | 30-130 | 58.2 | 1316 | 3:56 | 30-130 | 57.4 | 1365 | 4:46 | 30-130 | 56.0 |
| 1268 | 3:08 | 30-130 | 56.3 | 1317 | 3:57 | 30-130 | 58.5 | 1366 | 4:47 | 30-130 | 57.9 |
| 1269 | 3:09 | 30-130 | 58.2 | 1318 | 3:58 | 30-130 | 59.1 | 1367 | 4:48 | 30-130 | 58.9 |
| 1270 | 3:10 | 30-130 | 57.1 | 1319 | 3:59 | 30-130 | 58.1 | 1368 | 4:49 | 30-130 | 58.5 |
| 1271 | 3:11 | 30-130 | 57.2 | 1320 | 4:00 | 30-130 | 59.6 | 1369 | 4:50 | 30-130 | 57.5 |
| 1272 | 3:12 | 30-130 | 56.6 | 1321 | 4:01 | 30-130 | 60.1 | 1370 | 4:51 | 30-130 | 56.8 |
| 1273 | 3:13 | 30-130 | 57.6 | 1322 | 4:02 | 30-130 | 61.3 | 1371 | 4:52 | 30-130 | 56.3 |
| 1274 | 3:14 | 30-130 | 58.1 | 1323 | 4:03 | 30-130 | 64.4 | 1372 | 4:53 | 30-130 | 57.6 |
| 1275 | 3:15 | 30-130 | 57.2 | 1324 | 4:04 | 30-130 | 63.3 | 1373 | 4:54 | 30-130 | 56.8 |
| 1276 | 3:16 | 30-130 | 56.2 | 1325 | 4:05 | 30-130 | 62.8 | 1374 | 4:55 | 30-130 | 56.7 |
| 1277 | 3:17 | 30-130 | 58.4 | 1326 | 4:06 | 30-130 | 61.6 | 1375 | 4:55 | 30-130 | 58.6 |
| 1278 | 3:18 | 30-130 | 56.7 | 1327 | 4:07 | 30-130 | 64.6 | 1376 | 4:56 | 30-130 | 57.4 |
| 1279 | 3:19 | 30-130 | 57.6 | 1328 | 4:08 | 30-130 | 57.1 | 1377 | 4:57 | 30-130 | 56.6 |
| 1280 | 3:20 | 30-130 | 56.2 | 1329 | 4:09 | 30-130 | 56.9 | 1378 | 4:58 | 30-130 | 55.4 |
| 1281 | 3:21 | 30-130 | 58.6 | 1330 | 4:10 | 30-130 | 57.3 | 1379 | 4:59 | 30-130 | 57.6 |
| 1282 | 3:22 | 30-130 | 57.2 | 1331 | 4:11 | 30-130 | 58.2 | 1380 | 5:00 | 30-130 | 56.6 |
| 1283 | 3:23 | 30-130 | 58.0 | 1332 | 4:12 | 30-130 | 57.3 | 1381 | 5:01 | 30-130 | 57.5 |
| 1284 | 3:24 | 30-130 | 59.2 | 1333 | 4:13 | 30-130 | 58.1 | 1382 | 5:02 | 30-130 | 57.5 |
| 1285 | 3:25 | 30-130 | 57.3 | 1334 | 4:14 | 30-130 | 57.3 | 1383 | 5:03 | 30-130 | 57.7 |
| 1286 | 3:26 | 30-130 | 58.0 | 1335 | 4:15 | 30-130 | 56.2 | 1384 | 5:04 | 30-130 | 57.3 |
| 1287 | 3:27 | 30-130 | 57.9 | 1336 | 4:16 | 30-130 | 57.6 | 1385 | 5:05 | 30-130 | 57.3 |
| 1288 | 3:28 | 30-130 | 57.5 | 1337 | 4:17 | 30-130 | 57.4 | 1386 | 5:06 | 30-130 | 57.1 |
| 1289 | 3:29 | 30-130 | 56.4 | 1338 | 4:18 | 30-130 | 56.6 | 1387 | 5:07 | 30-130 | 57.5 |
| 1290 | 3:30 | 30-130 | 57.3 | 1339 | 4:19 | 30-130 | 57.4 | 1388 | 5:08 | 30-130 | 57.5 |
| 1291 | 3:31 | 30-130 | 58.8 | 1340 | 4:20 | 30-130 | 55.3 | 1389 | 5:09 | 30-130 | 57.8 |
| 1292 | 3:32 | 30-130 | 57.1 | 1341 | 4:21 | 30-130 | 58.9 | 1390 | 5:10 | 30-130 | 57.7 |
| 1293 | 3:33 | 30-130 | 56.6 | 1342 | 4:22 | 30-130 | 57.0 | 1391 | 5:11 | 30-130 | 57.3 |
| 1294 | 3:34 | 30-130 | 57.9 | 1343 | 4:23 | 30-130 | 56.1 | 1392 | 5:12 | 30-130 | 57.7 |
| 1295 | 3:35 | 30-130 | 58.1 | 1344 | 4:24 | 30-130 | 56.2 | 1393 | 5:13 | 30-130 | 57.8 |
| 1296 | 3:36 | 30-130 | 56.2 | 1345 | 4:25 | 30-130 | 57.5 | 1394 | 5:14 | 30-130 | 57.4 |
| 1297 | 3:37 | 30-130 | 57.2 | 1346 | 4:26 | 30-130 | 56.8 | 1395 | 5:15 | 30-130 | 57.3 |
| 1298 | 3:38 | 30-130 | 56.2 | 1347 | 4:27 | 30-130 | 57.3 | 1396 | 5:16 | 30-130 | 57.2 |
| 1299 | 3:39 | 30-130 | 58.7 | 1348 | 4:28 | 30-130 | 56.6 | 1397 | 5:17 | 30-130 | 57.7 |
| 1300 | 3:40 | 30-130 | 56.0 | 1349 | 4:29 | 30-130 | 57.6 | 1398 | 5:18 | 30-130 | 57.2 |
| 1301 | 3:41 | 30-130 | 57.6 | 1350 | 4:30 | 30-130 | 57.0 | 1399 | 5:19 | 30-130 | 57.4 |
| 1302 | 3:42 | 30-130 | 56.6 | 1351 | 4:31 | 30-130 | 58.0 | 1400 | 5:20 | 30-130 | 57.6 |
| 1303 | 3:43 | 30-130 | 57.0 | 1352 | 4:32 | 30-130 | 56.7 | 1401 | 5:21 | 30-130 | 57.7 |

# BHARAT PETROLEUM CORPORATION LIMITED, BINA-M.P.

## NOISE MONITORING REPORT INSIDE GREEN BELT AREA

**Location-Tower No.7 Date-28/08/2023 July 2023 TO September 2023**

| NOISE MONITORING FOR NIGHT TIME (10:00 PM to 06:00 AM) | | | |
|---|---|---|---|
| Record No. | Time hh:mm | Range dB | Reading dB A |
| 1402 | 5:22 | 30-130 | 57.7 |
| 1403 | 5:23 | 30-130 | 57.6 |
| 1404 | 5:24 | 30-130 | 57.7 |
| 1405 | 5:25 | 30-130 | 57.3 |
| 1406 | 5:26 | 30-130 | 57.1 |
| 1407 | 5:27 | 30-130 | 57.8 |
| 1408 | 5:28 | 30-130 | 57.6 |
| 1409 | 5:29 | 30-130 | 57.7 |
| 1410 | 5:30 | 30-130 | 57.4 |
| 1411 | 5:31 | 30-130 | 57.4 |
| 1412 | 5:32 | 30-130 | 57.4 |
| 1413 | 5:33 | 30-130 | 57.7 |
| 1414 | 5:34 | 30-130 | 57.4 |
| 1415 | 5:35 | 30-130 | 57.4 |
| 1416 | 5:36 | 30-130 | 57.5 |
| 1417 | 5:37 | 30-130 | 57.1 |
| 1418 | 5:38 | 30-130 | 57.4 |
| 1419 | 5:39 | 30-130 | 57.5 |
| 1420 | 5:40 | 30-130 | 57.4 |
| 1421 | 5:41 | 30-130 | 57.7 |
| 1422 | 5:42 | 30-130 | 57.2 |
| 1423 | 5:43 | 30-130 | 57.6 |
| 1424 | 5:44 | 30-130 | 57.6 |
| 1425 | 5:45 | 30-130 | 57.1 |
| 1426 | 4:46 | 30-130 | 57.7 |
| 1427 | 5:47 | 30-130 | 57.2 |
| 1428 | 5:48 | 30-130 | 57.1 |
| 1429 | 5:49 | 30-130 | 57.3 |
| 1430 | 5:50 | 30-130 | 57.3 |
| 1431 | 5:51 | 30-130 | 57.3 |
| 1432 | 5:52 | 30-130 | 57.6 |
| 1433 | 5:53 | 30-130 | 57.4 |
| 1434 | 5:54 | 30-130 | 57.7 |
| 1435 | 5:55 | 30-130 | 57.4 |
| 1436 | 5:56 | 30-130 | 57.8 |
| 1437 | 5:57 | 30-130 | 57.5 |
| 1438 | 5:58 | 30-130 | 57.7 |
| 1439 | 5:59 | 30-130 | 57.8 |
| 1440 | 6:00 | 30-130 | 57.3 |
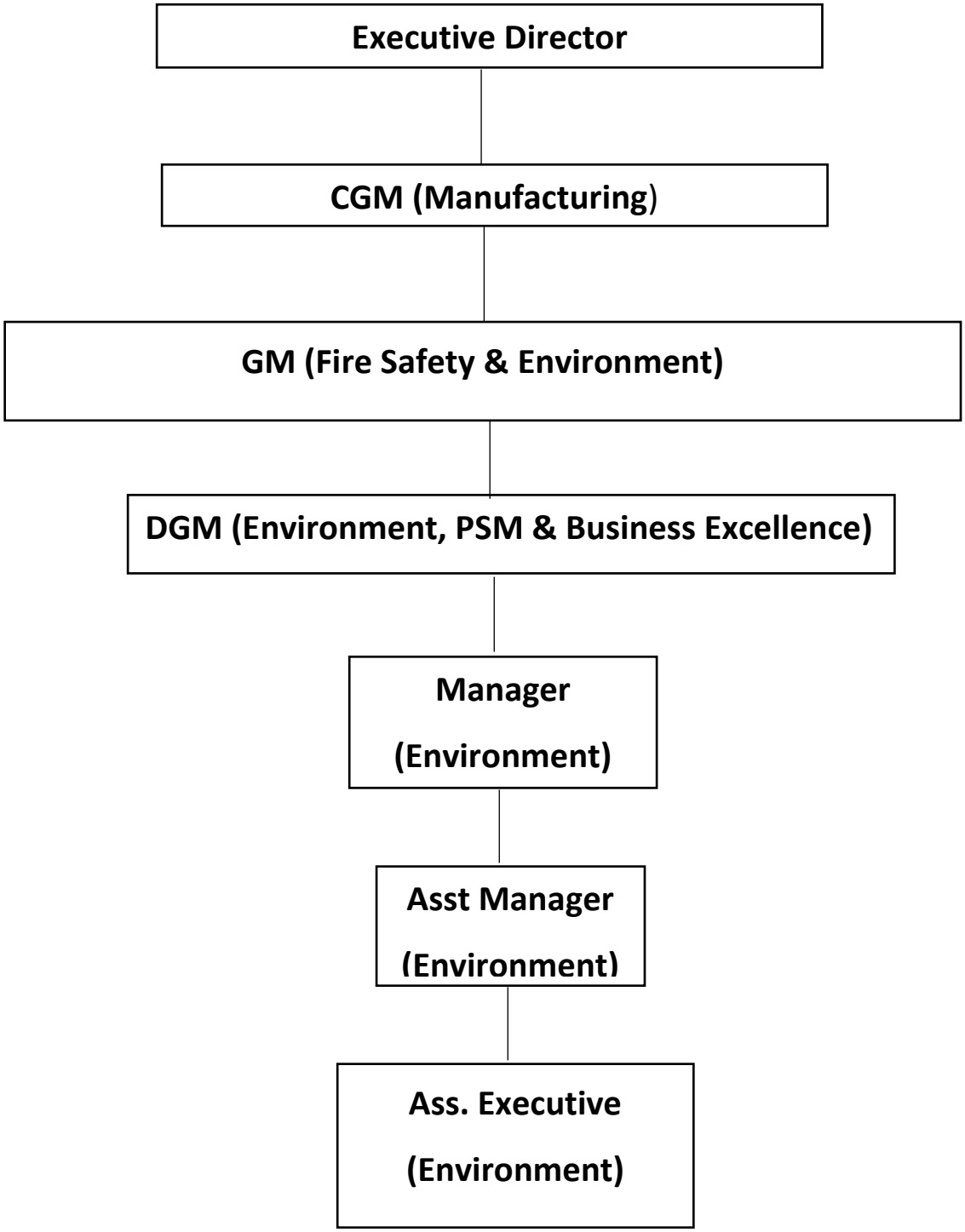
# Organization Chart of the Environment Cell